# EZ-SCREEN LPM Low-Profile Safety Light Curtain with Integral Muting Product Manual

Original Instructions
p/n: 150216 Rev. G
13-Apr-26
© Banner Engineering Corp. All rights reserved. www.bannerengineering.com

ПРОМЭЛЕКТРОНИКА/ sales@prom-elec.com

# Contents


## Chapter 1 About This Document ..... 5
1.1 Important... Read This Before Proceeding! ..... 5
1.2 Use of Warnings and Cautions ..... 5
1.3 EU/UK Declaration of Conformity (DoC) ..... 6

## Chapter 2 Standards and Regulations ..... 7
2.1 Applicable US Standards ..... 7
2.2 Applicable OSHA Regulations ..... 8
2.3 International/European Standards ..... 8

## Chapter 3 Introduction ..... 9
3.1 Appropriate Applications and Limitations ..... 9
3.1.1 Examples: Appropriate Applications ..... 9
3.1.2 Examples: Inappropriate Applications ..... 10
3.1.3 Control Reliability: Redundancy and Self-Checking ..... 10
3.2 Features ..... 10
3.3 System Description ..... 11
3.4 Standard Emitter and Receiver Models—14 mm Resolution ..... 12
3.5 Standard Emitter and Receiver Models—25 mm Resolution ..... 13
3.6 Operating Features ..... 13
3.7 Specifications ..... 14
3.7.1 General Specifications ..... 14
3.7.2 Emitter Specifications ..... 14
3.7.3 Receiver Specifications ..... 14
3.7.4 Mounting Dimensions and Defined Area ..... 16

## Chapter 4 Mechanical Installation ..... 19
4.1 Mechanical Installation Considerations ..... 19
4.1.1 Calculating the Safety Distance (Minimum Distance) ..... 19
4.1.2 Formula and Examples ..... 20
4.1.3 Examples ..... 21
4.1.4 Reducing or Eliminating Pass-Through Hazards ..... 22
4.1.5 Supplemental Safeguarding ..... 23
4.2 Other Considerations ..... 24
4.2.1 Reset Switch Location ..... 24
4.2.2 Adjacent Reflective Surfaces ..... 25
4.2.3 Use of Corner Mirrors ..... 26
4.2.4 Emitter and Receiver Orientation ..... 27
4.2.5 Installation of Multiple Systems ..... 28
4.3 Mounting System Components ..... 29
4.3.1 Overview of Emitter-Receiver Mounting Hardware ..... 29
4.3.2 Sensor Mounting and Mechanical Alignment ..... 32

## Chapter 5 Electrical Installation and Testing ..... 34
5.1 Routing Cordsets ..... 34
5.2 Initial Electrical Connections ..... 35
5.3 Initial Checkout Procedure ..... 36
5.3.1 Configuring the System for Initial Checkout ..... 36
5.3.2 Initial Power-Up ..... 36
5.3.3 Optical Alignment of the EZ-SCREEN LP with Muting Models ..... 37
5.3.4 Optical Alignment Procedure with Mirrors ..... 38
5.3.5 Mute Configuration ..... 39
5.3.6 Reduced Resolution (Floating Blanking) ..... 40
5.3.7 Fixed Blanking ..... 41
5.3.8 Perform a Trip Test ..... 42
5.4 Electrical Connections to the Guarded Machine ..... 43
5.4.1 Output Signal Switching Device (OSSD) Output Connections ..... 44
5.4.2 Final Switching Devices (FSD) Interfacing Connections ..... 44
5.4.3 Machine Primary Control Elements and EDM Input ..... 45
5.4.4 External Device Monitoring ..... 46
5.4.5 Emitter Remote Test Input ..... 47
5.4.6 Auxiliary (OSSD Follow/Fault) Output ..... 47
5.5 Reference Wiring Diagrams ..... 47
5.5.1 Generic Emitter Wiring Diagram ..... 47
5.5.2 Generic Receiver Wiring to FSDs (manual reset) ..... 48


© Banner Engineering Corp. All rights reserved. www.bannerengineering.com

5.5.3 Generic Receiver Wiring to an Interface Module ..... 49
5.5.4 Generic Receiver Wiring to a Self-Checking Safety Module, Safety Controller, Safety PLC ..... 50

**Chapter 6 Preparing for System Operation ..... 51**
6.1 Commissioning Checkout ..... 51
6.2 Muting Checkout ..... 52

**Chapter 7 Muting Functions ..... 54**
7.1 Typical Muting Applications ..... 55
7.1.1 Entry/Exit Applications ..... 55
7.1.2 Home or Station Applications ..... 58
7.1.3 Robot Load/Unload Station Application ..... 58
7.1.4 Turret Table Application ..... 59
7.1.5 Power Press Applications ..... 60
7.2 Mute Devices ..... 61
7.3 Mute Time Limit (Backdoor Timer) ..... 61
7.4 General Muting Device Requirements ..... 61
7.5 Examples of Muting Sensors and Switches ..... 62
7.6 Mute Enable (ME) ..... 63
7.7 Muting Timing Sequences ..... 63
7.8 Mute Lamp Output ..... 64

**Chapter 8 System Configuration Settings ..... 66**
8.1 Bypass and Mute-Dependent Override ..... 67
8.1.1 Override Timing Sequence ..... 68
8.1.2 Bypass Timing Sequence ..... 70
8.2 Selectable Trip/Latch Outputs ..... 70

**Chapter 9 System Operation ..... 71**
9.1 Security Protocol ..... 71
9.2 Status Indicators ..... 71
9.2.1 Emitter Status Indicator Codes ..... 72
9.2.2 Receiver Status Indicator Codes ..... 72
9.2.3 Receiver Status Indicator Operation - Trip Output ..... 73
9.2.4 Receiver Status Indicator Operation - Latch Output ..... 73
9.3 Normal Operation ..... 73
9.3.1 System Power-Up ..... 73
9.3.2 Run Mode ..... 74

**Chapter 10 Checkout Procedures ..... 75**
10.1 Periodic Checkout Requirements ..... 75
10.2 Schedule of Checkouts ..... 75

**Chapter 11 Troubleshooting ..... 77**
11.1 Lockout Conditions ..... 77
11.2 Reset Procedures ..... 78
11.3 Emitter and Receiver Resets ..... 78
11.4 Emitter Error Codes ..... 79
11.5 Receiver Error Codes ..... 79
11.6 Test Mode ..... 81
11.7 Electrical and Optical Noise ..... 81
11.7.1 Check for Sources of Electrical Noise ..... 82
11.7.2 Check for Optical Noise Sources ..... 82

**Chapter 12 Accessories ..... 83**
12.1 Cordsets ..... 83
12.1.1 Connection Options ..... 83
12.1.2 M12 QD to Flying Leads and RDLP to Flying Leads Cordsets ..... 83
12.1.3 12-pin M12 QD to RD Cordsets ..... 85
12.1.4 Male M12 to Female M12 QD Cordsets ..... 85
12.1.5 Muting Splitter Cordsets ..... 86
12.1.6 4 and 5-Pin M12 QD Cordsets ..... 90
12.2 Interface Modules ..... 90
12.3 Contactors ..... 90
12.4 Safety Controllers ..... 91
12.5 External Keyed Reset Switches ..... 91

© Banner Engineering Corp. All rights reserved. www.bannerengineering.com

12.6 Snap-On Lens Shields ... 91
12.7 EZ-LIGHT® for EZ-SCREEN® Low Profile with Muting ... 92
12.8 MSA Series Stands ... 92
12.9 MSM Series Corner Mirrors ... 93
12.10 SSM Series Corner Mirrors ... 93
12.11 Accessory Mounting Brackets ... 94
12.12 Alignment Aids ... 96

**Chapter 13 Product Support and Maintenance ... 97**
13.1 Clean Components with Mild Detergent ... 97
13.2 Replacement Parts ... 97
13.3 Warranty Service ... 97
13.4 Disposal ... 98
13.5 Manufacturing Date ... 98
13.6 Contact Us ... 98
13.7 Banner Engineering Corp Limited Warranty ... 98

**Index ... 99**

**Glossary ... 101**

© Banner Engineering Corp. All rights reserved. www.bannerengineering.com

Chapter Contents

1.1 Important... Read This Before Proceeding! ..... 5
1.2 Use of Warnings and Cautions ..... 5
1.3 EU/UK Declaration of Conformity (DoC) ..... 6

# Chapter 1 About This Document

## 1.1 Important... Read This Before Proceeding!

It is the responsibility of the machine designer, controls engineer, machine builder, machine operator, and/or maintenance personnel or electrician to apply and maintain this device in full compliance with all applicable regulations and standards. The device can provide the required safeguarding function only if it is properly installed, properly operated, and properly maintained. This manual attempts to provide complete installation, operation, and maintenance instructions. *Reading the manual in its entirety is highly recommended to ensure proper understanding of the operation, installation, and maintenance.* Please direct any questions regarding the application or use of the device to Banner Engineering Corp..

For more information regarding U.S. and international institutions that provide safeguarding application and safeguarding device performance standards, see "Standards and Regulations" on page 7.

**WARNING:**

- The user is responsible for following these instructions.
- **Failure to follow any of these responsibilities may potentially create a dangerous condition that could result in serious injury or death.**
- Carefully read, understand, and comply with all instructions for this device.
- Perform a risk assessment that includes the specific machine guarding application. Guidance on a compliant methodology can be found in ISO 12100 or ANSI B11.0.
- Determine what safeguarding devices and methods are appropriate per the results of the risk assessment and implement per all applicable local, state, and national codes and regulations. See ISO 13849-1, ANSI B11.19, and/or other appropriate standards.
- Verify that the entire safeguarding system (including input devices, control systems, and output devices) is properly configured and installed, operational, and working as intended for the application.
- Periodically re-verify, as needed, that the entire safeguarding system is working as intended for the application.

## 1.2 Use of Warnings and Cautions

The precautions and statements used throughout this document are indicated by alert symbols and must be followed for the safe use of the EZ-SCREEN Low-Profile (LP) Safety Light Curtain with Muting. Failure to follow all precautions and alerts may result in unsafe use or operation. The following signal words and alert symbols are defined as follows:

| Signal Word and Symbol | Definition |
|---|---|
| **WARNING**: | **Warnings** refer to potentially hazardous situations which, if not avoided, could result in serious injury or death. |
| **CAUTION**: | **Cautions** refer to potentially hazardous situations which, if not avoided, could result in minor or moderate injury. |


© Banner Engineering Corp. All rights reserved.
www.bannerengineering.com

These statements are intended to inform the machine designer and manufacturer, the end user, and maintenance personnel, how to avoid misapplication and effectively apply the EZ-SCREEN Low-Profile (LP) Safety Light Curtain with Muting to meet the various safeguarding application requirements. These individuals are responsible to read and abide by these statements.

## 1.3 EU/UK Declaration of Conformity (DoC)

Banner Engineering Corp. herewith declares that these products are in conformity with the provisions of the listed directives and all essential health and safety requirements have been met. For the complete DoC, please go to www.bannerengineering.com.

| Product | Directive |
|---|---|
| EZ-SCREEN Low-Profile (LP) Safety Light Curtain with Muting | EU: Machinery Directive 98/37/EEC and 2006/42/EC |
| | UKCA: Machinery (Safety) Regulation 2008 |

Representative in EU: Spiros Lachandidis, Managing Director, **Banner Engineering BV** Park Lane | Culliganlaan 2F bus 3 | 1831 Diegem, BELGIUM

Representative in UK: Tony Coghlan, Managing Director, **Turck Banner LTD** Blenheim House | Blenheim Court | Wickford, Essex SS11 8YT | Great Britain


© Banner Engineering Corp. All rights reserved.
www.bannerengineering.com

Chapter Contents

2.1 Applicable US Standards ..... 7
2.2 Applicable OSHA Regulations ..... 8
2.3 International/European Standards ..... 8

# Chapter 2 Standards and Regulations

*The list of standards below is included as a convenience for users of this Banner device. Inclusion of the standards below does not imply that the device complies specifically with any standard, other than those specified in the Specifications section of this manual.*

## 2.1 Applicable US Standards

*Not inclusive*

ANSI B11.0 Safety of Machinery

ANSI B11.1 Mechanical Power Presses

ANSI B11.2 Hydraulic Power Presses

ANSI B11.3 Power Press Brakes

ANSI B11.4 Shears

ANSI B11.5 Iron Workers

ANSI B11.6 Lathes

ANSI B11.7 Cold Headers and Cold Formers

ANSI B11.8 Drilling, Milling, and Boring

ANSI B11.9 Grinding Machines

ANSI B11.10 Metal Sawing Machines

ANSI B11.11 Gear Cutting Machines

ANSI B11.12 Roll Forming and Roll Bending Machines

ANSI B11.13 Single- and Multiple-Spindle Automatic Bar and Chucking Machines

ANSI B11.14 Coil Slitting Machines

ANSI B11.15 Pipe, Tube, and Shape Bending Machines

ANSI B11.16 Metal Powder Compacting Presses

ANSI B11.17 Horizontal Extrusion Presses

ANSI B11.18 Machinery and Machine Systems for the Processing of Coiled Strip, Sheet, and Plate

ANSI B11.19 Performance Requirements for Risk Reduction Measures: Safeguarding and Other Means of Reducing Risk

ANSI B11.20 Manufacturing Systems

ANSI B11.21 Machine Tools Using Lasers

ANSI B11.22 Numerically Controlled Turning Machines

ANSI B11.23 Machining Centers

ANSI B11.24 Transfer Machines


© Banner Engineering Corp. All rights reserved.

ANSI/RIA R15.06 Safety Requirements for Industrial Robots and Robot Systems

NFPA 79 Electrical Standard for Industrial Machinery

ANSI/PMMI B155.1 Package Machinery and Packaging-Related Converting Machinery — Safety Requirements

## 2.2 Applicable OSHA Regulations

OSHA Documents listed are part of: Code of Federal Regulations Title 29, Parts 1900 to 1910

OSHA 29 CFR 1910.212 General Requirements for (Guarding of) All Machines

OSHA 29 CFR 1910.147 The Control of Hazardous Energy (lockout/tagout)

OSHA 29 CFR 1910.217 (Guarding of) Mechanical Power Presses

## 2.3 International/European Standards

*Not inclusive*

ISO 12100 Safety of Machinery – General Principles for Design – Risk Assessment and Risk Reduction

ISO 13857 Safety of Machinery – Safety Distances to Prevent Hazard Zones Being Reached

ISO 13850 Emergency Stop Devices, Functional Aspects – Principles for Design

ISO 13851 Two-Hand Control Devices – Principles for Design and Selection

IEC 62061 Safety of Machinery – Functional Safety of Safety-Related Control Systems

ISO 13849-1 Safety of Machinery – Safety-Related Parts of Control Systems – Part 1: General Principles for Design

EN 13855 The Positioning of Protective Equipment in Respect to Approach Speeds of Parts of the Human Body

ISO 14119 Interlocking Devices Associated with Guards – Principles for Design and Selection

EN 60204-1 Electrical Equipment of Machines Part 1: General Requirements

IEC 61496 Electro-sensitive Protection Equipment

IEC 60529 Degrees of Protection Provided by Enclosures

IEC 60947-1 Low Voltage Switchgear – General Rules

IEC 60947-5-1 Low Voltage Switchgear – Electromechanical Control Circuit Devices

IEC 60947-5-5 Low Voltage Switchgear – Electrical Emergency Stop Device with Mechanical Latching Function

IEC 61508 Functional Safety of Electrical/Electronic/Programmable Electronic Safety-Related Systems

IEC 62046 Safety of Machinery – Applications of Protective Equipment to Detect the Presence of Persons

ISO 3691-4 Industrial Trucks – Safety Requirements and Verification, Part 4 Driverless Industrial trucks and their Systems


© Banner Engineering Corp. All rights reserved.

Chapter Contents

3.1 Appropriate Applications and Limitations ..... 9
3.2 Features ..... 10
3.3 System Description ..... 11
3.4 Standard Emitter and Receiver Models—14 mm Resolution ..... 12
3.5 Standard Emitter and Receiver Models—25 mm Resolution ..... 13
3.6 Operating Features ..... 13
3.7 Specifications ..... 14

# Chapter 3 Introduction

## 3.1 Appropriate Applications and Limitations

**WARNING:**

- **Read this Section Carefully Before Installing the System**
- **Failure to follow these instructions could result in serious injury or death.**
- If all mounting, installation, interfacing, and checkout procedures are not followed properly, this Banner Engineering Corp. device cannot provide the protection for which it was designed.
- The user is responsible for ensuring that all local, state, and national laws, rules, codes, or regulations relating to the installation and use of this control system in any particular application are satisfied. Ensure that all legal requirements have been met and that all technical installation and maintenance instructions contained in this manual are followed.
- The user has the sole responsibility to ensure that this Banner Engineering Corp. device is installed and interfaced to the guarded machine by Qualified Persons, in accordance with this manual and applicable safety regulations. A Qualified person is a person who, by possession of a recognized degree or certificate of professional training, or who, by extensive knowledge, training and experience, has successfully demonstrated the ability to solve problems relating to the subject matter and work.

The Banner EZ-SCREEN LPM is intended for point-of-operation guarding and other safeguarding applications. It is the user's responsibility to verify whether the safeguarding is appropriate for the application and is installed, as instructed by this manual, by a Qualified Person.

The ability of the EZ-SCREEN LPM to perform its safeguarding function depends upon the appropriateness of the application and upon its proper mechanical and electrical installation and interfacing to the guarded machine. **If all mounting, installation, interfacing, and checkout procedures are not followed properly, the EZ-SCREEN LPM cannot provide the protection for which it was designed**.

**WARNING:**

- **Install System Only on Appropriate Applications**
- Failure to follow these instructions could result in serious injury or death.
- Use Banner's EZ-SCREEN LPM only on machinery that can be stopped immediately after a stop signal is issued at any point in the machine's stroke or cycle, such as machines with a part-revolution clutch. Under no circumstances may the EZ-SCREEN LPM be used on full-revolution clutched machinery or in unsuitable applications.
- If there is any doubt about whether or not your machinery is compatible with the EZ-SCREEN LPM, contact Banner Engineering.

### 3.1.1 Examples: Appropriate Applications

EZ-SCREEN LPM is typically used for, but is not limited to, the following applications:

- Entry/Exit Applications. The muting devices are placed to allow the entry or exit of a pallet or cart of work materials to enter or exit a workstation without tripping the safety light screen, and without allowing the entrance of personnel into the hazardous area.


© Banner Engineering Corp. All rights reserved.
www.bannerengineering.com

- Home or Station Applications. The muting devices must be placed to mute the safety light screen only when a hazard does not exist or is in another area — so that personnel are not exposed to any hazard.
- Robot Load/Unload Station Application. The “Station” muting application uses independent safety light screen circuits, each with its own muting circuit and sensors to protect work locations. When a robot is active in Station A, for example, Station B safety light screen is muted.
- Turret Table Application. A “Turret Table” application is similar to the Robot Load/Unload Station muting application, except that any movement of the table ends the mute.
- Power Press Applications. The muting devices are placed so that the mute is initiated only during the non-hazardous, opening portion of the cycle (typically the machine upstroke).

**WARNING:**
- **Muting is allowed only during the non-hazardous portion of the machine cycle**
- Failure to follow these instructions could result in serious injury or death.
- Design the muting application so that no single component failure can prevent the stop command or allow subsequent machine cycles until the failure is corrected (per ISO 13849-1 and ANSI B11.19).

See "Typical Muting Applications" on page 55 for more information.

### 3.1.2 Examples: Inappropriate Applications

Do not use EZ-SCREEN LPM in the following applications:

- With any machine that cannot be stopped immediately after a stop signal is issued, such as single-stroke (or full-revolution) clutched machinery
- With any machine with inadequate or inconsistent machine response time and stopping performance
- With any machine that ejects materials or component parts through the defined area
- In any environment that is likely to adversely affect photoelectric sensing efficiency. For example, corrosive chemicals or fluids or unusually severe levels of smoke or dust, if not controlled, may degrade sensing efficiency
- As a tripping device to initiate or reinitiate machine motion (PSDI applications), unless the machine and its control system fully comply with the relevant standard or regulation (seeOSHA 29CFR1910.217, NFPA 79, ANSI B11.19, ISO 12100, IEC 60204-1, IEC 61496-1, or other appropriate standard)

If an EZ-SCREEN LPM is installed for use as a perimeter guard (where a pass-through hazard point may exist, see "Reducing or Eliminating Pass-Through Hazards" on page 22), the dangerous machine motion can be initiated by normal means only after the safeguarded area is clear of individuals and the EZ-SCREEN LPM has been manually reset.

### 3.1.3 Control Reliability: Redundancy and Self-Checking

Redundancy requires that EZ-SCREEN LPM circuit components be backed up to the extent that if the failure of a single component will prevent effective machine stopping action when needed, that component must have a redundant counterpart that will perform the same function. The EZ-SCREEN LPM is designed with redundant microprocessors for control reliability.

Redundancy must be maintained whenever the EZ-SCREEN LPM is in operation. Because a redundant system is no longer redundant after a component has failed, EZ-SCREEN LPM is designed to monitor itself continuously. A component failure detected by or within the self-checking system causes a stop signal to be sent to the guarded machine and puts the EZ-SCREEN LPM into a lockout condition.

A recovery from this type of lockout condition requires:

- Replacement of the failed component (to restore redundancy)
- The appropriate reset procedure

The Diagnostic Display is used to diagnose the causes of a lockout condition. See "Troubleshooting" on page 77.

## 3.2 Features

- A two-piece optoelectronic safeguarding device with integrated muting function
- Eight different pre-defined muting configuration options, including Bypass, Mute-Dependent Override, Mute Enable, and Mute-Cycle time extension (4 seconds) for "L"-style cell exit applications

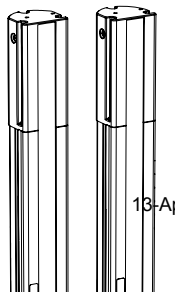


© Banner Engineering Corp. All rights reserved.
www.bannerengineering.com

- Mute Lamp and Status Outputs to EZ-LIGHT® (or other indicating devices) with RD cordsets and accessory end-cap mounting bracket
- Creates a screen of synchronized, modulated infrared sensing beams that extend from end-to-end of the housing (no "dead" zone)
- Low-profile compact package for smaller production machines, robust for large power presses
- 14 mm or 25 mm resolution; defined areas from 410 to 1250 mm (16.1 in to 49.2 in)
- 100 mm to 7 m (4 in to 23 ft) sensing range
- Reduced resolution and fixed blanking is easily configured.
- Zone and Status indicators plus digital display to indicate number of beams blocked, detailed diagnostics
- FMEA tested to ensure control reliability
- Highly immune to EMI, RFI, ambient light, weld flash, and strobe light
- External device monitoring
- Vibration-tolerant, factory burned-in emitter and receiver circuitry for toughness and dependability
- Selectable Aux/Fault output option to monitor the state of the OSSDs or monitor receiver lockouts
- Selectable emitter test option simulates a "blocked" condition
- Safety PLC input compatible (per output signal switching device specifications)

## 3.3 System Description

**NOTE:** This manual refers to an emitter and its receiver, and their cabling as "a System".

Banner EZ-SCREEN LPM emitters and receivers provide a redundant, microprocessor-controlled, opposed-mode optoelectronic "curtain of light", or "safety light screen". EZ-SCREEN LPM typically is used for safeguarding applications where the temporary suspension of the safeguard (muting) is periodically required.

**CAUTION:**
- **Mute status must be readily observed**
- Failure of the mute indicator should be detectable from the location of the muted device and prevent the next mute.
- Verify the indicator's operation at suitable intervals. Provide easily observed indication that the safety device is muted. Select lamp monitoring if the application requires compliance with UL 61496.

The EZ-SCREEN LPM is a two-piece (two-box) system comprising an emitter and a receiver, but no external controller. The external device monitoring (EDM) function ensures the fault detection capability required by EN ISO 13849-1 Categories 3 and 4 without a third box, a controller or a "smart" (self-checking) safety module required of systems without EDM.

The EZ-SCREEN LPM emitters have a row of synchronized modulated infrared (invisible) light-emitting diodes (LEDs) in a compact metal housing. Receivers have a corresponding row of synchronized photodetectors. The light screen created by the emitter and receiver is called the defined area; its width and height are determined by the length of the sensor pair and the distance between them. The low-profile housing provides maximum sensing within minimum space; its defined area (sensing area) is equivalent to the height of the housing. The maximum sensing range is 7 m (23 ft), which decreases if corner mirrors are used. The sensing area extends from end to end of the housing; there is no “dead zone.” Specialty brackets allow easy mounting of sensors.

In typical operation, if any part of an operator’s body (or any opaque object) of more than a pre-determined cross section is detected, the solid-state Output Signal Switching Device (OSSD) safety outputs turn OFF. These safety outputs are connected to the guarded machine’s Final Switching Devices (FSDs) that control the machine primary control elements (MPCEs), which immediately stop the motion of the guarded machine.

The EZ-SCREEN Low-Profile (LP) Safety Light Curtain with Muting monitor the redundant mute device inputs and automatically suspend the safeguarding function of a device during the non-hazardous portion of the machine cycle.

In this manual, the term *muting* refers to the automatic suspension of the safeguarding function of the EZ-SCREEN LPM during a non-hazardous portion of the machine cycle where personnel are not exposed to harm.


© Banner Engineering Corp. All rights reserved.
www.bannerengineering.com

The muting function allows material to be manually or automatically fed into or removed from a machine process, without tripping the EZ-SCREEN LPM. The EZ-SCREEN LPM accomplishes this by using redundant microprocessors that monitor the status of inputs and outputs, so that a single fault will cause the receiver to issue a stop command to the machine. The EZ-SCREEN LPM, like all Banner safety products, is extensively Failure Mode and Effects Analysis (FMEA) tested to establish an extremely high degree of confidence that no internal component will, even if it does fail, cause a failure to danger. This design philosophy aids machine designers to comply with U.S. control reliability and worldwide standards for the highest level of safety.

Electrical connections (power, ground, inputs, and outputs) are made via M12 quick-disconnects or unique RD (removable disconnect) cordsets, depending on model.

Functions such as Trip/Latch select, Display Invert, Safety Mute Function, Fixed Blanking, Reduced Resolution, Scan Code Select, and External Device Monitoring are described in "Operating Features" on page 13. An auxiliary (aux.) output may be used to signal the state of the OSSDs to a process controller. All models require a supply voltage of +24 V DC ±15%.

Both the emitter and the receiver feature 7-segment diagnostic displays and individual LEDs to provide continuous indication of operating status, configuration, and error conditions.

## 3.4 Standard Emitter and Receiver Models—14 mm Resolution

Pigtail QD Emitter models require mating cordsets with an 8-pin M12 connector such as **QDE-8..D**.

Pigtail QD Receiver models require mating cordsets with a 12-pin M12 connector such as **QDE-12..D**.

Integral RD models require mating cordsets with a removable disconnect connector such as **RDLP-8..D** (Emitters) or **RDLP-11..E** (Receivers).

| Defined Area | Models | | | Response Time | # Beams |
|---|---|---|---|---|---|
| | Emitter | Receiver | Pair[1] | | |
| 410 mm | SLPE14-410P8 | SLPMR14-410P12 | SLPMP14-410P128 | 13.5 ms | 41 |
| | SLPE14-410 | SLPMR14-410 | SLPMP14-410 | | |
| 550 mm | SLPE14-550P8 | SLPMR14-550P12 | SLPMP14-550P128 | 16.5 ms | 55 |
| | SLPE14-550 | SLPMR14-550 | SLPMP14-550 | | |
| 690 mm | SLPE14-690P8 | SLPMR14-690P12 | SLPMP14-690P128 | 19.5 ms | 69 |
| | SLPE14-690 | SLPMR14-690 | SLPMP14-690 | | |
| 830 mm | SLPE14-830P8 | SLPMR14-830P12 | SLPMP14-830P128 | 22.5 ms | 83 |
| | SLPE14-830 | SLPMR14-830 | SLPMP14-830 | | |
| 970 mm | SLPE14-970P8 | SLPMR14-970P12 | SLPMP14-970P128 | 25.5 ms | 97 |
| | SLPE14-970 | SLPMR14-970 | SLPMP14-970 | | |
| 1110 mm | SLPE14-1110P8 | SLPMR14-1110P12 | SLPMP14-1110P128 | 28.5 ms | 111 |
| | SLPE14-1110 | SLPMR14-1110 | SLPMP14-1110 | | |
| 1250 mm | SLPE14-1250P8 | SLPMR14-1250P12 | SLPMP14-1250P128 | 31.5 ms | 125 |
| | SLPE14-1250 | SLPMR14-1250 | SLPMP14-1250 | | |
| 1390 mm * | SLPE14-1390P8 | SLPMR14-1390P12 | SLPMP14-1390P128 | 34.5 ms | 139 |
| | SLPE14-1390 | SLPMR14-1390 | SLPMP14-1390 | | |
| 1530 mm * | SLPE14-1530P8 | SLPMR14-1530P12 | SLPMP14-1530P128 | 37.5 ms | 153 |
| | SLPE14-1530 | SLPMR14-1530 | SLPMP14-1530 | | |
| 1670 mm * | SLPE14-1670P8 | SLPMR14-1670P12 | SLPMP14-1670P128 | 40.5 ms | 167 |
| | SLPE14-1670 | SLPMR14-1670 | SLPMP14-1670 | | |
| 1810 mm * | SLPE14-1810P8 | SLPMR14-1810P12 | SLPMP14-1810P128 | 43.5 ms | 181 |
| | SLPE14-1810 | SLPMR14-1810 | SLPMP14-1810 | | |

* Lengths longer than 1250 mm are no longer available.

[1] A pair includes an emitter and a receiver


© Banner Engineering Corp. All rights reserved.
www.bannerengineering.com

## 3.5 Standard Emitter and Receiver Models—25 mm Resolution

Pigtail QD Emitter models require mating cordsets with an 8-pin M12 connector such as **QDE-8..D**.

Pigtail QD Receiver models require mating cordsets with a 12-pin M12 connector such as **QDE-12..D**.

Integral RD models require mating cordsets with a removable disconnect connector such as **RDLP-8..D** (Emitters) or **RDLP-11..E** (Receivers).

| Defined Area | Models | | | Response Time | # Beams |
|---|---|---|---|---|---|
| | Emitter | Receiver | Pair[2] | | |
| 410 mm | SLPE25-410P8 | SLPMR25-410P12 | SLPMP25-410P128 | 9.5 ms | 21 |
| | SLPE25-410 | SLPMR25-410 | SLPMP25-410 | | |
| 550 mm | SLPE25-550P8 | SLPMR25-550P12 | SLPMP25-550P128 | 11 ms | 28 |
| | SLPE25-550 | SLPMR25-550 | SLPMP25-550 | | |
| 690 mm | SLPE25-690P8 | SLPMR25-690P12 | SLPMP25-690P128 | 12.5 ms | 35 |
| | SLPE25-690 | SLPMR25-690 | SLPMP25-690 | | |
| 830 mm | SLPE25-830P8 | SLPMR25-830P12 | SLPMP25-830P128 | 14 ms | 42 |
| | SLPE25-830 | SLPMR25-830 | SLPMP25-830 | | |
| 970 mm | SLPE25-970P8 | SLPMR25-970P12 | SLPMP25-970P128 | 15.5 ms | 49 |
| | SLPE25-970 | SLPMR25-970 | SLPMP25-970 | | |
| 1110 mm | SLPE25-1110P8 | SLPMR25-1110P12 | SLPMP25-1110P128 | 17 ms | 56 |
| | SLPE25-1110 | SLPMR25-1110 | SLPMP25-1110 | | |
| 1250 mm | SLPE25-1250P8 | SLPMR25-1250P12 | SLPMP25-1250P128 | 18.5 ms | 63 |
| | SLPE25-1250 | SLPMR25-1250 | SLPMP25-1250 | | |
| 1390 mm * | SLPE25-1390P8 | SLPMR25-1390P12 | SLPMP25-1390P128 | 20 ms | 70 |
| | SLPE25-1390 | SLPMR25-1390 | SLPMP25-1390 | | |
| 1530 mm * | SLPE25-1530P8 | SLPMR25-1530P12 | SLPMP25-1530P128 | 21 ms | 77 |
| | SLPE25-1530 | SLPMR25-1530 | SLPMP25-1530 | | |
| 1670 mm * | SLPE25-1670P8 | SLPMR25-1670P12 | SLPMP25-1670P128 | 22.5 ms | 84 |
| | SLPE25-1670 | SLPMR25-1670 | SLPMP25-1670 | | |
| 1810 mm * | SLPE25-1810P8 | SLPMR25-1810P12 | SLPMP25-1810P128 | 24 ms | 91 |
| | SLPE25-1810 | SLPMR25-1810 | SLPMP25-1810 | | |

* Lengths longer than 1250 mm are no longer available.

## 3.6 Operating Features

The EZ-SCREEN Low-Profile (LP) Safety Light Curtain with Muting models feature these standard functions.

- Integrated Muting—"Muting Functions" on page 54
- Reduced Resolution (Floating Blanking)—"Reduced Resolution (Floating Blanking)" on page 40
- Trip or Latch Output—"Selectable Trip/Latch Outputs" on page 70
- External Device Monitoring (EDM)—"External Device Monitoring" on page 46
- Auxiliary Output; OSSD Follow or Fault—"Auxiliary (OSSD Follow/Fault) Output" on page 47
- Scan Code setting—"Installation of Multiple Systems" on page 28
- Fixed Blanking—"Fixed Blanking" on page 41
- Emitter Test and Fault functions
- Inverted Display
- Eight different standard muting configuration options
- Mute Lamp Monitoring—"Mute Lamp Output" on page 64

[2] A pair includes an emitter and a receiver


© Banner Engineering Corp. All rights reserved.
www.bannerengineering.com

- Override and Bypass—"Bypass and Mute-Dependent Override" on page 67
- Mute Enable—"Mute Enable (ME)" on page 63

These functions are configured via DIP switches (behind the access door on the front of each sensor) and/or the sensor wiring configuration. The sensing resolution is determined by the emitter and receiver model.

# 3.7 Specifications

## 3.7.1 General Specifications

**Short Circuit Protection**
All inputs and outputs are protected from short circuits to +24 V DC or DC common

**Electrical Safety Class**
III (per IEC 61140: 1997)

**Safety Rating**
Type 4 per IEC 61496-1, -2

Category 4 PL e per EN ISO13849-1

SIL3 per IEC 61508; SIL CL3 per IEC 62061

PFHd: $4 \times 10^{-9}$

Proof Test Interval: 20 years

**Operating Range**
0.1 m to 7 m (4 in. to 23 ft) — Range decreases with use of mirrors and/or lens shields:
- Lens shields — approx 10% less range per shield
- Glass-surface mirrors — approx 8% less range per mirror

See the specific mirror datasheet for more information.

**Resolution**
14 mm or 25 mm, depending on model (Reduced Resolution Off)

**Effective Aperture Angle (EAA)**
Meets Type 4 requirements per IEC 61496-2

±2.5° at 3 m

**Operating Conditions**
0 °C to +55 °C (+32 °F to +131 °F)

95% maximum relative humidity (non-condensing)

**Enclosure**
Extruded aluminum housing with yellow polyester powder finish standard and well-sealed, rugged die-cast zinc end caps, acrylic lens cover, copolyester access cover

**Environmental Rating**
IP65

**Shock and Vibration**
Components have passed vibration and shock tests according to IEC 61496-1. This includes vibration (10 cycles) of 10-55 Hz at 0.35 mm (0.014 in) single amplitude (0.70 mm peak-to-peak) and shock of 10 g for 16 milliseconds (6,000 cycles).

**Mounting Hardware**
Emitter and receiver each are supplied with a pair of swivel end-mounting brackets and two swivel side-mount brackets. Models longer than 690 mm also require additional side-mount bracket(s) for center support. Mounting brackets are 8-gauge cold-rolled steel, black zinc finish.

**Cables and Connections**
See "Accessories" on page 83 for recommended cables. If other cables are used with the EZ-SCREEN LPM, the user must verify suitability of these cables for each application.

**Certifications**

Banner Engineering BV
Park Lane, Culliganlaan 2F bus 3
1831 Diegem, BELGIUM

Turck Banner LTD Blenheim House
Blenheim Court
Wickford, Essex SS11 8YT
GREAT BRITAIN

## 3.7.2 Emitter Specifications

**Supply Voltage at the Device**
24 V DC ±15% (use a SELV-rated power supply according to EN IEC 60950). The external voltage supply must be capable of buffering brief mains interruptions of 20 ms, as specified in IEC/EN 60204-1.

**Residual Ripple**
± 10% maximum

**Supply Current**
60 mA maximum, exclusive of Fault Out load

**Fault Output Switching Capacity**
Current-sourcing (PNP) solid-state output, 24 V DC at 250 mA maximum

**Status Indicators**
One bi-color (Red/Green) Status Indicator: indicates operating mode, lockout or power Off condition

7-Segment Diagnostic indicator (1 digit): indicates proper operation, scan code, or error code

**Remote Test Input**
Test mode is activated either by applying a low signal (less than 3 V DC) to emitter Test/Reset terminal for a minimum of 50 milliseconds, or by opening a switch connected between Test/Reset and +24 V DC for a minimum of 50 milliseconds. Beam scanning stops to simulate a blocked condition. A high signal at Test/Reset deactivates Test mode.

High Signal: 10 to 30 V DC

Low Signal: 0 to 3 V DC

Input Current: 35 mA inrush, 10 mA maximum

**Controls and Adjustments**
Scan Code Selection: 2-position switch (code 1 or 2). Factory default position is code 1.

Test/Reset: 2-position switch. Factory default position is Reset.

Invert Display: 2-position switch. Factory default position is Off (standard display).

Fault: 2-position switch. Factory default position is Off.

## 3.7.3 Receiver Specifications

**Supply Voltage at the Device**

24 V DC ±15% (use a SELV-rated power supply according to


© Banner Engineering Corp. All rights reserved.

EN IEC 60950). The external voltage supply must be capable of buffering brief mains interruptions of 20 ms, as specified in IEC/EN 60204-1.

**Residual Ripple**
±10% maximum

**Supply Current (no load)**
150 mA maximum, exclusive of OSSD1 and OSSD2 loads (up to additional 0.5 A each) and Aux/Fault Out load (up to 0.25 A)

**Response Time**
Dependent on the number of sensing beams; see the models table for the number of beams and response time.

**EDM Input**
+24 V DC signals from external device contacts can be monitored (one-channel or no monitoring) via EDM1 terminal in the receiver.

High Signal: 10 to 30 V DC at 30 mA typical

Low Signal: 0 to 3 V DC

**Recovery Time**
**Blocked to Clear (OSSDs turn On; varies with total number of sensing beams and whether Sync beam is blocked):**

| Model | Beam 1 (Sync Beam) | All Other Beams |
|---|---|---|
| 14 mm | 109 ms to 800 ms | 33 ms to 220 ms |
| 25 mm | 81 ms to 495 ms | 25 ms to 152 ms |

**Reset Input**
Reset input must be high for 0.25 to 2 seconds and then low to reset the receiver

High Signal: 10 to 30 V DC at 30 mA typical

Low Signal: 0 to 3 V DC

Closed Switch Time: 0.25 to 2 seconds

**Mute Lamp Output**
A monitored or non-monitored (selectable), current-sourcing (PNP), solid-state output

Rated Current: 10 mA to 360 mA at 24 V DC

**External Remote Indicator Outputs**
Current sourcing (PNP), solid-state, 24 V DC outputs for the connection of remote indicator lamps such as EZ-LIGHTs. See Accessories for compatible EZ-LIGHTs and associated cordsets.

Rated Current: 100 mA maximum at 24 V DC

**Output Signal Switching Devices (OSSDs)**
Two redundant solid-state 24 V DC, 0.5 A max. sourcing OSSD (Output Signal Switching Device) safety outputs. (Use optional interface modules for AC or larger DC loads.)

Capable of the Banner "Safety Handshake".

ON-State voltage: ≥ Vin-1.5 V DC

OFF-State, maximum allowed external voltage: 1.7 V DC

Maximum load capacitance: 1.0 µF

Minimum load inductance: 10 H

Leakage current: 0.50 mA maximum

OSSD test pulse width: 100 to 300 microseconds typical

OSSD test pulse period: 10 ms to 22 ms (varies with number of beams)

Switching current: 0 to 0.5 A

**Auxiliary Output Switching Capacity (OSSD/Fault)**
Current-sourcing (PNP) solid-state output, 24 V DC at 250 mA max.

**Controls and Adjustments**
Scan Code selection: 2-position switch (code 1 or 2). Factory default position is code 1

Trip/Latch Output selection: Redundant switches. Factory default position is T (trip).

**Mute Lamp Monitoring:** On/Off switch. Factory default position is On.

Reduced Resolution: Redundant switches. Factory default position is Off.

Aux./Fault: 2-position switch. Factory default position is Aux.

Invert Display: 2-position switch. Factory default position is Off (standard display).

**Status Indicators**
Amber Reset Indicator: indicates whether the System is ready for operation or requires a reset

Bi-color (red/green) Status indicator: indicates general system and output status

Bi-color (red/green) Zone Status indicators: indicate condition (clear or blocked beam) of a defined group of beams

7-Segment Diagnostic indicator (1 digit): indicates proper operation, scan code, error code, or total number of blocked beams

7-Segment Diagnostic indicator (3 digits): indicates proper operation, scan code, error code, or total number of blocked beams

**Amber Mute Device Input Indicators:** indicates status of mute device inputs

**Ambient Light Immunity**
10,000 lux at 5° angle of incidence

**Strobe Light Immunity**
Totally immune to one Federal Signal Corp. "Fireball" model FB2PST strobe


© Banner Engineering Corp. All rights reserved.

## 3.7.4 Mounting Dimensions and Defined Area

All measurements are listed in millimeters [inches], unless noted otherwise. The measurements provided are subject to change.

*Figure 1. Emitter and receiver mounting dimensions and defined area*

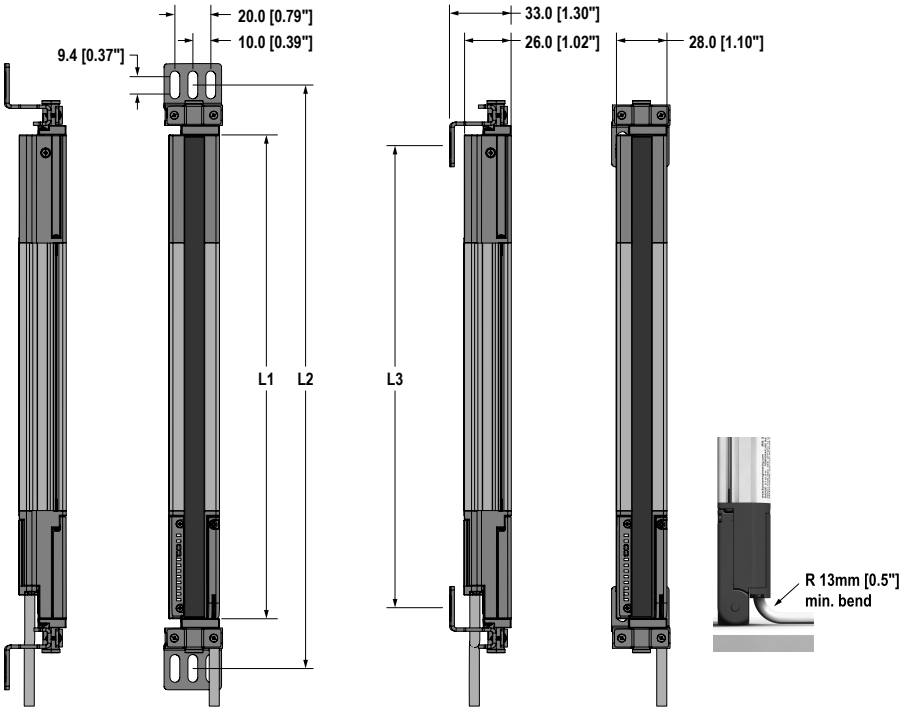


| Emitter / Receiver Model | Housing Length | Distance Between Bracket Holes | | Defined Area[3] |
|---|---|---|---|---|
| | L1 | L2 | L3 | |
| **SLPM..-410..** | 410 mm (16.1 in) | 465 mm (18.3 in) | 398 mm (15.7 in) | 410 mm |
| **SLPM..-550..** | 549 mm (21.6 in) | 605 mm (23.8 in) | 537 mm (21.1 in) | 550 mm |
| **SLPM..-690..** | 689 mm (27.1 in) | 745 mm (29.3 in) | 677 mm (26.7 in) | 690 mm |
| **SLPM..-830..** | 829 mm (32.6 in) | 885 mm (34.8 in) | 817 mm (32.2 in) | 830 mm |
| **SLPM..-970..** | 969 mm (38.1 in) | 1024 mm (40.3 in) | 957 mm (37.7 in) | 970 mm |
| **SLPM..-1110..** | 1108 mm (43.6 in) | 1164 mm (45.8 in) | 1096 mm (43.1 in) | 1110 mm |
| **SLPM..-1250..** | 1248 mm (49.1 in) | 1304 mm (51.3 in) | 1236 mm (48.7 in) | 1250 mm |
| **SLPM..-1390..** * | 1388 mm (54.6 in) | 1444 mm (56.9 in) | 1376 mm (54.2 in) | 1390 mm |
| **SLPM..-1530..** * | 1528 mm (60.2 in) | 1583 mm (62.3 in) | 1516 mm (59.7 in) | 1530 mm |
| **SLPM..-1670..** * | 1667 mm (65.6 in) | 1723 mm (67.8 in) | 1655 mm (65.2 in) | 1670 mm |
| **SLPM..-1810..** * | 1807 mm (71.1 in) | 1863 mm (73.3 in) | 1795 mm (70.7 in) | 1810 mm |

* Lengths longer than 1250 mm are no longer available.

[3] Nominal measurement


© Banner Engineering Corp. All rights reserved.
www.bannerengineering.com

*Table 1. Included mounting bracket—dimensions (for emitter or receiver)*

| | |
|---|---|
| **Optional End-Cap Bracket LPA-MBK-10**<br> | 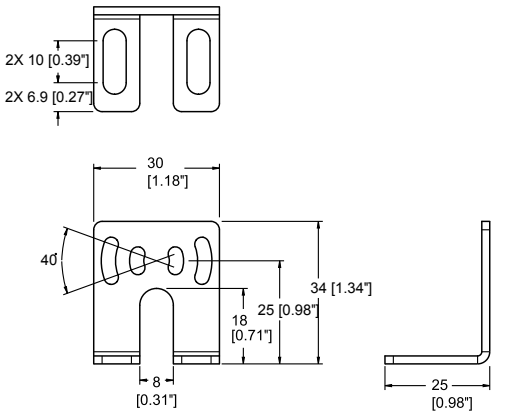 |
| **End-Cap Bracket LPA-MBK-11**<br> | 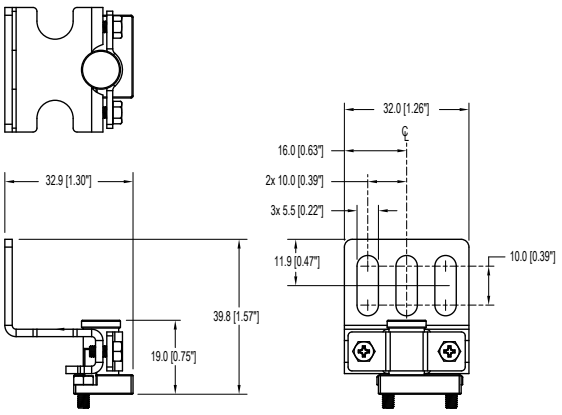 |
| **Side-Mount Bracket LPA-MBK-12**<br>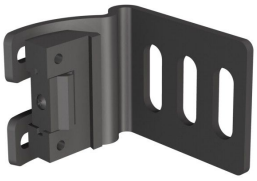 | 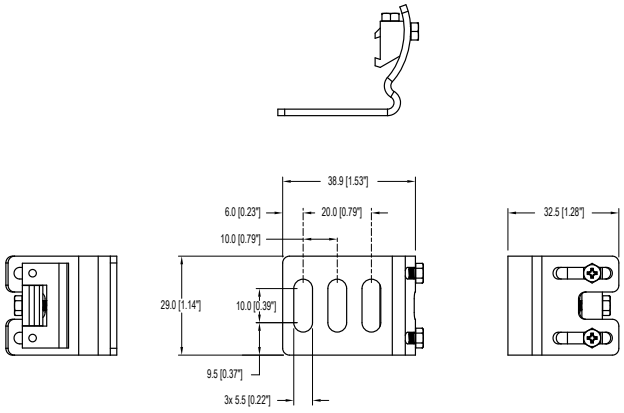 |


© Banner Engineering Corp. All rights reserved.
www.bannerengineering.com

*Table 2. Optional mounting bracket—dimensions (for emitter or receiver)*

| | |
|---|---|
| **Side-Mount Bracket LPA-MBK-16**<br><br>(optional) | 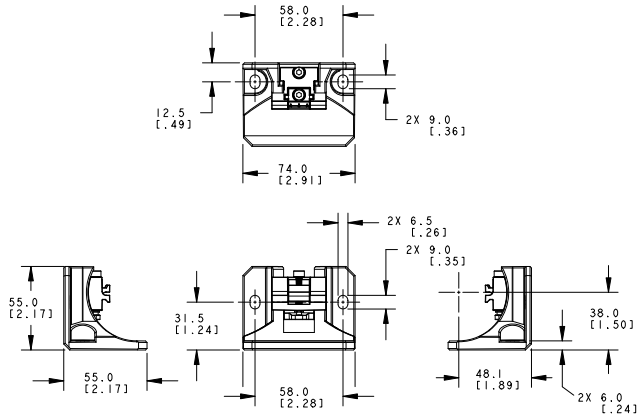 |


© Banner Engineering Corp. All rights reserved.
www.bannerengineering.com

Chapter Contents

4.1 Mechanical Installation Considerations ..... 19
4.2 Other Considerations ..... 24
4.3 Mounting System Components ..... 29

# Chapter 4 Mechanical Installation

The EZ-SCREEN LPM system performance as a safety guarding device depends on:

- The suitability of the application
- The proper mechanical and electrical installation and interfacing to the guarded machine

**WARNING:**

- **Read this Section Carefully Before Installing the System**
- **Failure to follow these instructions could result in serious injury or death.**
- If all mounting, installation, interfacing, and checkout procedures are not followed properly, this Banner Engineering Corp. device cannot provide the protection for which it was designed.
- The user is responsible for ensuring that all local, state, and national laws, rules, codes, or regulations relating to the installation and use of this control system in any particular application are satisfied. Ensure that all legal requirements have been met and that all technical installation and maintenance instructions contained in this manual are followed.
- The user has the sole responsibility to ensure that this Banner Engineering Corp. device is installed and interfaced to the guarded machine by Qualified Persons, in accordance with this manual and applicable safety regulations. A Qualified person is a person who, by possession of a recognized degree or certificate of professional training, or who, by extensive knowledge, training and experience, has successfully demonstrated the ability to solve problems relating to the subject matter and work.

## 4.1 Mechanical Installation Considerations

The two primary factors that influence the layout of the EZ-SCREEN LPM system mechanical installation are:

- Minimum distance/safety distance (see "Calculating the Safety Distance (Minimum Distance)" on page 19)
- Eliminating pass-through hazard/hazard points via supplemental guarding (see "Reducing or Eliminating Pass-Through Hazards" on page 22)

Other considerations include:

- Emitter and Receiver Orientation (see "Emitter and Receiver Orientation" on page 27)
- Adjacent Reflective Surfaces (see "Adjacent Reflective Surfaces" on page 25)
- Use of Corner Mirrors (see "Use of Corner Mirrors" on page 26)
- Installation of Multiple Systems (see "Installation of Multiple Systems" on page 28)

**WARNING:**

- **Position the System Components Carefully**
- Failure to observe this warning could result in serious injury or death.
- Position the system components such that the hazard point/hazard cannot be accessed by reaching over, under, around, or through the sensing field. Additional and supplemental guarding may be required.

### 4.1.1 Calculating the Safety Distance (Minimum Distance)

The safety distance (Ds), also called Minimum Distance (S), is the minimum distance required between the defined area and the closest reachable hazard point. The distance is calculated so that when an object or a person is detected (by blocking a sensing beam), the EZ-SCREEN LPM sends a stop signal to the machine, causing it to stop by the time the object or person can reach any machine hazard point.


© Banner Engineering Corp. All rights reserved.
www.bannerengineering.com

The distance is calculated differently for U.S. and European installations. Both methods take into account several factors, including a calculated human speed, the total system stopping time (which itself has several components), and the depth penetration factor. After the distance has been determined, record the calculated distance on the Daily Checkout Card.

**WARNING:**

- **Calculate the Safety Distance (Minimum Distance)**
- Failure to establish and maintain the safety distance (minimum distance) could result in serious injury or death.
- Mount the components at a distance from the nearest hazard such that an individual cannot reach the hazard before cessation of the hazardous motion or situation. Calculate this distance using the supplied formulas, as described by ANSI B11.19 and ISO 13855. Mount the components more than 100 mm (4 in) away from the hazard, regardless of the calculated value.

**WARNING:** Reduced Resolutions increases Dpf (or C). Increase the depth penetration factor to calculate proper minimum distance when using a Reduced Resolution configuration. Always turn Reduced Resolution mode off when the larger minimum object detection size is not required.

*Figure 2. Safety distance (minimum distance) and hard (fixed) guarding*

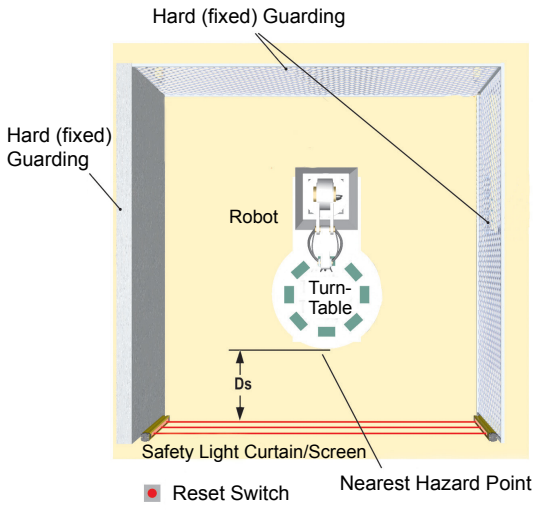


## 4.1.2 Formula and Examples

### US Applications

The Safety (Separation) Distance formula for U.S. applications:

```
Ds = K × (Ts + Tr) + Dpf
```

**Ds**
the Safety Distance, in inches

**K**
1600 mm per second (or 63 in per second), the OSHA 29CFR1910.217, and ANSI B11.19 recommended hand-speed constant (see Note 1 below)

**Ts**
the overall stop time of the machine (in seconds) from the initial stop signal to the final ceasing of all motion, including stop times of all relevant control elements (for example, IM-T-.. Interface Modules) and measured at maximum machine velocity (see Note 3 below)

**Tr**
the maximum response time, in seconds, of the EZ-SCREEN LPM emitter/receiver pair (depending on model)

**Dpf**
the added distance due to the depth penetration factor as prescribed in OSHA 29CFR1910.217, and ANSI B11.19 for U.S. applications. See Depth Penetration Factor (Dpf) table below or calculate using the formula (in mm): Dpf = 3.4 × (S - 7) where S is the resolution of the light curtain (for S ≤ 63 mm).

### European Applications

The Minimum Distance formula for European applications:


© Banner Engineering Corp. All rights reserved.
www.bannerengineering.com

```
S = (K × T) + C
```

**S**
the Minimum Distance, in mm, from danger zone to light screen center line; minimum allowable distance is 100 mm ( 175 mm for non-industrial applications), regardless of calculated value

**K**
hand-speed constant (see Note 2 below); **2000 mm/s** (for Minimum Distances ≤ 500 mm) **1600 mm/s** (for Minimum Distances > 500 mm)

**T**
the overall machine stopping response time (in seconds), from the physical initiation of the safety device and the machine coming to a stop (or the hazard removed). This can be broken down into two parts: **Ts** and **Tr** where **T** = **Ts** + **Tr**

**C**
the additional distance, in mm, based on intrusion of a hand or object towards the danger zone prior to actuation of a safety device. Calculate using the formula (in mm):

```
C = 8 × (d - 14)
```

where `d` is the resolution of the light curtain (for `d` ≤ 40 mm), or use 850 mm for C.

*Table 3. Depth Penetration Factor (Dpf)*

| Reduced Resolution | Depth Penetration Factor (Dpf) | |
|---|---|---|
| | 14 mm Systems | 25 mm Systems |
| OFF | 24 mm (0.94 in) | 61 mm (2.4 in) |
| ON | 92 mm (3.6 in) | 915 mm (36 in) |

**Notes:**

1. The OSHA-recommended hand speed constant **K** has been determined by various studies and, although these studies indicate speeds of 1600 mm/sec. (63 in/sec.) to more than 2500 mm/sec. (100 in/sec.), they are not conclusive determinations. Consider all factors, including the physical ability of the operator, when determining the value of **K** to be used.
2. The recommended hand speed constant **K**, derived from data on approach speeds of the body or parts of the body as stated in ISO 13855.
3. **Ts** is usually measured by a stop-time measuring device. If the machine manufacturer's specified stop time is used, at least 20% should be added to allow for possible clutch/ brake system deterioration. This measurement must take into account the slower of the two MPCE channels, and the response time of all devices or controls that react to stop the machine.

**WARNING:**
- **Stop time (Ts) must include the response time of all devices or controls that react to stop the machine**
- If all devices are not included, the calculated safety distance (Ds or S) will be too short, which can lead to serious injury or death.
- Include the stop time of all relevant devices and controls in your calculations.
- If required, each of the two machine primary control elements (MPCE1 and MPCE2) must be capable of immediately stopping the dangerous machine motion, regardless of the state of the other. These two channels of machine control need not be identical, but the stop time performance of the machine (Ts, used to calculate the safety distance) must take into account the slower of the two channels.

## 4.1.3 Examples

**U.S. Applications, Model SLPM..14-550**

**K**
63 in. per second (the hand speed constant set by OSHA)

**Ts**
0.32 (0.250 second is specified by the machine manufacturer; plus 20% safety factor; plus 20 ms for interface module IM-T-9A response time)

**Tr**
0.0165 seconds (the specified response time of an SLPM..14-550 EZ-SCREEN LPM)

**Dpf**
3.6 in (14 mm resolution, Reduced Resolution ON)

Substitute the numbers into the formula as follows:

```
Ds = K × ( Ts + Tr ) + Dpf
```


© Banner Engineering Corp. All rights reserved.
www.bannerengineering.com

```
Ds = 63 × (0.32 + 0.0165) + 3.6 = 24.8 in
```

Mount the EZ-SCREEN LPM emitter and receiver so that no part of the defined area will be closer than 24.8 in. to the closest reachable hazard point on the guarded machine.

**European Applications, Model SLPM..14-550**

**K**
1600 mm per second

**T**
0.32 (0.250 seconds specified by machine manufacturer; plus 20% safety factor; plus 20 ms interface module response time), plus 0.0165 seconds (the specified **SLPM..14-550** response time)

**C**
8 x (34 - 14) = 160 mm (14 mm resolution, Reduced Resolution ON)

Substitute the numbers into the formula as follows:

```
S = (K × T ) + C

S = (1600 × 0.3365) + 160 = 698.4 mm
```

Mount the EZ-SCREEN LPM emitter and receiver so that no part of the defined area will be closer than 698.4 mm to the closest reachable hazard point on the guarded machine.

### 4.1.4 Reducing or Eliminating Pass-Through Hazards

A pass-through hazard is associated with applications where personnel may pass through a safeguard, such as the EZ-SCREEN Low-Profile (LP) Safety Light Curtain with Muting (which issues a stop command to remove the hazard), and then continues into the guarded area. This is common in access and perimeter guarding applications. Subsequently, their presence is no longer detected, and the related danger becomes the unexpected start or restart of the machine while personnel are within the guarded area.

A pass-through hazard typically results from large safety distances calculated from long stopping times, large minimum object sensitivities, reach-over, reach-through, or other installation considerations. A pass-through hazard can be generated with as little as 75 mm (3 in) between the sensing field and the machine frame or hard (fixed) guarding.

Eliminate or reduce pass-through hazards whenever possible. While it is recommended to eliminate the pass-through hazard altogether, this may not be possible due to machine layout, machine capabilities, or other application considerations.

One solution is to ensure that personnel are continually sensed while within the hazardous area. This can be accomplished by using supplemental guarding, such as described by the safety requirements in ANSI B11.19 or other appropriate standards.

An alternative method is to ensure that once the safeguarding device is tripped it will latch and will require a deliberate manual action to reset. This method of safeguarding relies upon the location of the reset switch as well as safe work practices and procedures to prevent an unexpected start or restart (auto start/restart (trip) condition) of the guarded machine. The EZ-SCREEN Low-Profile (LP) Safety Light Curtain with Muting provides a configurable manual start/restart (latch) function for these applications.

**WARNING:**
- **Use of the Banner device for Access or Perimeter Guarding**
- Failure to observe this warning could result in serious injury or death.
- If a Banner device is installed in an application that results in a pass-through hazard (for example, perimeter guarding), either the Banner device or themachine primary control element (MPCEs) of the guarded machine must cause a Latched response following an interruption of the defined area.
- The reset of this Latched condition may only be achieved by actuating a reset switch that is separate from the normal means of machine cycle initiation.


© Banner Engineering Corp. All rights reserved.
www.bannerengineering.com

**WARNING:**

- **Perimeter guarding applications**
- Failure to observe this warning could result in serious injury or death.
- Use lockout/tagout procedures per ANSI Z244.1, or use additional safeguarding as described by ANSI B11.19 safety requirements or other applicable standards if a passthrough hazard cannot be eliminated or reduced to an acceptable level of risk.

## 4.1.5 Supplemental Safeguarding

As described in "Calculating the Safety Distance (Minimum Distance)" on page 19, properly position the EZ-SCREEN LPM such that an individual cannot reach through the defined area and access the hazard point before the machine has stopped.

Additionally, the hazard cannot be accessible by reaching around, under, or over the defined area. To accomplish this,supplemental guarding (hard (fixed) guard, mechanical barriers, such as screens or bars), as described by ANSI B11.19 safety requirements or other appropriate standards, must be installed. Access will then be possible only through the defined area of the EZ-SCREEN LPM System or through other safeguarding that prevents access to the hazard (see "Figure: An example of supplemental safeguarding" on page 23).

The mechanical barriers used for this purpose are typically called a hard (fixed) guard; there must be no gaps between the hard (fixed) guarding and the defined area. Any openings in the hard (fixed) guarding must comply with the safe opening requirements of ANSI B11.19 or other appropriate standard.

*Figure 3. An example of supplemental safeguarding*

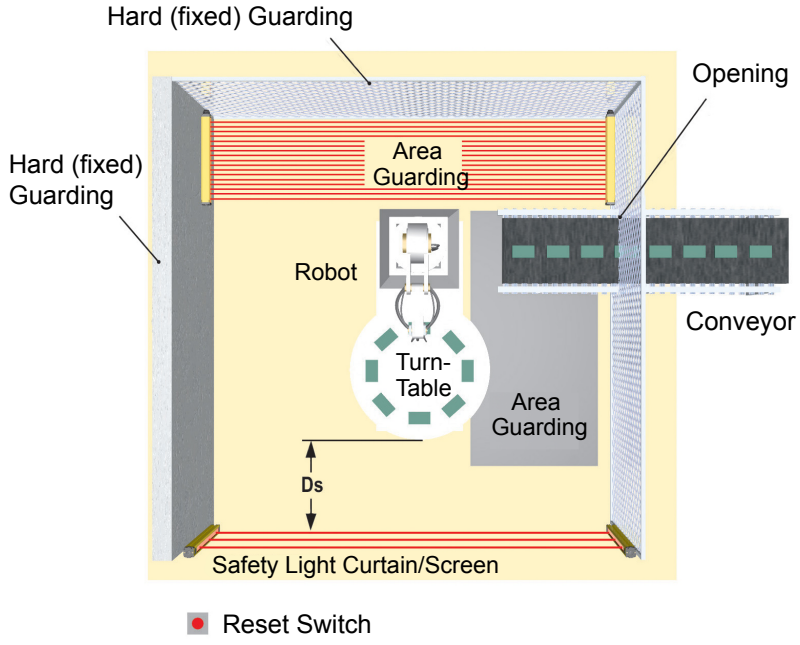


"Figure: An example of supplemental safeguarding" on page 23 shows an example of supplemental safeguarding inside a robotic work cell. The EZ-SCREEN LPM, in conjunction with the hard (fixed) guarding, is the primary safeguard. Supplemental safeguarding (such as a horizontal-mounted safety light screen as an area guard) is required in areas that cannot be viewed from the reset switch (for example, behind the robot and the conveyor). Additional supplemental safeguarding may be required to prevent clearance or trapping hazards (for example, a safety mat as an area guard between the robot, the turntable, and the conveyor).


© Banner Engineering Corp. All rights reserved.
www.bannerengineering.com

**WARNING:**

- **The hazard must be accessible only through the sensing field**
- Incorrect system installation could result in serious injury or death.
- The installation of the EZ-SCREEN LPM must prevent any individual from reaching around, under, over or through the defined area and into the hazard without being detected.
- See OSHA CFR 1910.217, ANSI B11.19, and/or ISO 14119, ISO 14120 and ISO 13857 for information on determining safety distances and safe opening sizes for your guarding device. Mechanical barriers (for example, hard (fixed) guarding) or supplemental safeguarding might be required to comply with these requirements.

# 4.2 Other Considerations

## 4.2.1 Reset Switch Location

**The reset switch must be mounted at a location that complies with the warning and guidelines below.** If any hazardous area is not in view from the switch location, additional means of safeguarding must be provided. The switch should be protected from accidental or unintended actuation (for example, through the use of rings or guards).

A key-actuated reset switch provides some operator or supervisory control, as the key can be removed from the switch and taken into the guarded area. However, this does not prevent unauthorized or inadvertent resets due to spare keys in the possession of others, or additional personnel entering the guarded area unnoticed. When considering where to locate the reset switch, follow the guidelines below.

**WARNING:**

- **Install reset switches properly**
- Failure to properly install reset switches could result in serious injury or death.
- Install reset switches so that they are accessible only from outside, and in full view of, the safeguarded space. Reset switches cannot be accessible from within the safeguarded space. Protect reset switches against unauthorized or inadvertent operation (for example, through the use of rings or guards). If there are any hazardous areas that are not visible from the reset switches, provide additional safeguarding.

All reset switches must be:

- Outside the guarded area
- Located to allow the switch operator a full, unobstructed, view of the entire guarded area while the reset is performed
- Out of reach from within the guarded area
- Protected against unauthorized or inadvertent operation (such as through the use of rings or guards).

**IMPORTANT:** Resetting a safeguard must not initiate hazardous motion. Safe work procedures require a start-up procedure to be followed and the individual performing the reset to verify that the entire hazardous area/hazard point is clear of all personnel before each reset of the safeguard is performed. If any area cannot be observed from the reset switch location, additional supplemental guarding/ safeguarding must be used: at a minimum, visual and audible warnings of machine start-up.


© Banner Engineering Corp. All rights reserved.
www.bannerengineering.com

## 4.2.2 Adjacent Reflective Surfaces

A reflective surface located adjacent to the defined area may deflect one or more beams around an object in the defined area. In the worst case, an optical short circuit may occur, allowing an object to pass undetected through the defined area.

**WARNING:**

- **Do not install the system near reflective surfaces**
- Reflective surfaces could reflect the sensing beam(s) around an object or person within the defined area, preventing detection by the system. Failure to prevent reflection problems results in incomplete guarding and an optical short circuit that could result in serious injury or death.
- Do not locate the defined area near a reflective surface. Perform the trip test, as described in the product documentation, to detect such reflection(s).

This reflective surface may result from shiny surfaces or glossy paint on the machine, the workpiece, the work surface, the floor, or the walls. Beams deflected by reflective surfaces are discovered by performing the trip test and the periodic checkout procedures. To eliminate problem reflections:

- If possible, relocate the sensors to move the beams away from the reflective surface(s), being careful to maintain adequate separation distance.
- Otherwise, if possible, paint, mask, or roughen the shiny surface to reduce its reflectivity.
- Where these are not possible (as with a shiny workpiece or machine frame), determine the worst-case resolution resulting from the optical short circuit and use the corresponding depth penetration factor (Dpf or C) in the Safety Distance (Minimum Distance) formula; or mount the sensors in such a way that the receiver's field of view and/or the emitter's spread of light are restricted from the reflective surface.
- Repeat the trip test (see "Perform a Trip Test" on page 42) to verify these changes have eliminated the problem reflection(s). If the workpiece is especially reflective and comes close to the defined area, perform the trip test with the workpiece in place.

*Figure 4. Adjacent Reflective Surfaces*

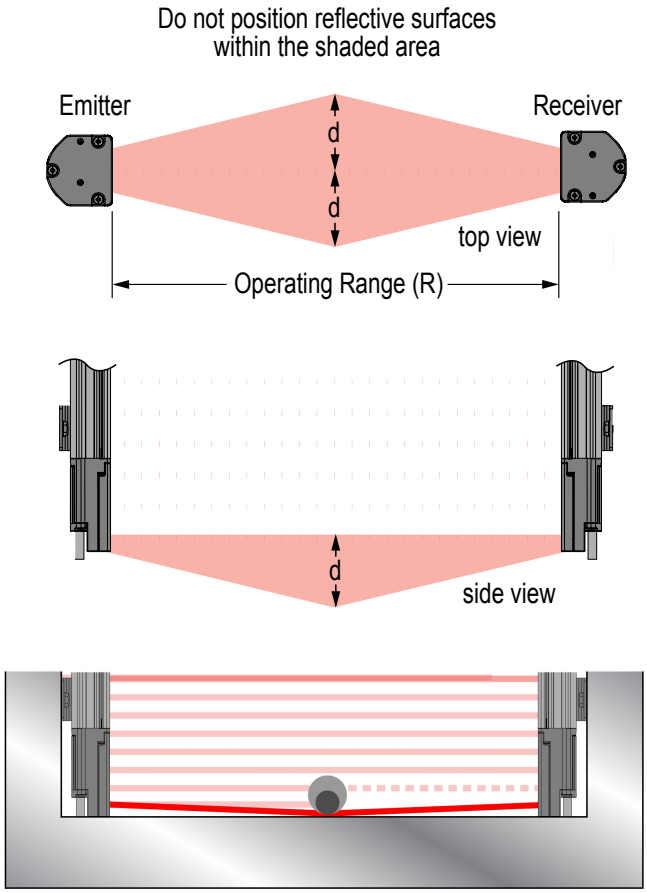


For 0.1 m to 3 m (4 in to 10 ft) Operating range: d = 0.13 m (5 in)


© Banner Engineering Corp. All rights reserved.
www.bannerengineering.com

For Operating range > 3 m (> 10 ft): d = 0.0437 × R (m or ft)

At the midpoint of the defined area, a test piece (represented by the darker circle) with the specified system resolution does not cause a blocked condition due to an optical short circuit. Green Zone indicator lights are On and the OSSDs are On. Increasing the size of the test piece to block additional beams causes a blocked condition. The size of the test piece required to do this determines the actual resolution. Use the table below to calculate Dpf or Factor C when a shiny surface causes an optical short circuit.

| Test Piece Model | Resolution | Depth Penetration Factor for U.S. Applications | Factor C for European Applications |
|---|---|---|---|
| STP-13 | 14 mm | 24 mm (1 in) | 0 mm |
| STP-2 | 19 mm | 41 mm (1.6 in) | 40 mm (1.6 in) |
| STP-16 | 25 mm | 61 mm (2.5 in) | 88 mm (3.5 in) |
| STP-14 | 30 mm | 78 mm (3 in) | 128 mm (5 in) |
| STP-4 | 32 mm | 85 mm (3.3 in) | 144 mm (5.7 in) |
| STP-17 | 34 mm | 92 mm (3.6 in) | 160 mm (6.3 in) |
| STP-1 | 38 mm | 106 mm (4.2 in) | 192 mm (7.6 in) |
| STP-3 | 45 mm | 129 mm (5 in) | 850 mm (33.5 in) |
| STP-8 | 51 mm | 150 mm (5.9 in) | 850 mm (33.5 in) |
| STP-5 | 58 mm | 173 mm (6.8 in) | 850 mm (33.5 in) |
| STP-15 | 60 mm | 180 mm (7 in) | 850 mm (33.5 in) |
| STP-12 | 62 mm | 187 mm (7.4 in) | 850 mm (33.5 in) |

### 4.2.3 Use of Corner Mirrors

EZ-SCREEN LPM may be used with one or more corner mirrors. Mirrors are not allowed for applications that would allow undetected personnel access into the safeguarded area. The use of glass-surface corner mirrors reduces the maximum specified emitter/receiver separation by approximately 8 percent per mirror, as follows:

*Table 4. Light Curtain Maximum Range*

| Light Curtain Series | 0 Mirrors | 1 Mirror | 2 Mirrors | 3 Mirrors | 4 Mirrors |
|---|---|---|---|---|---|
| SLC4 Safety Light Curtain | 2 m (6.6 ft) | 1.8 m (5.9 ft) | 1.6 m (5.2 ft) | 1.5 m (4.9 ft) | 1.4 m (4.6 ft) |
| EZ-SCREEN® LP Basic (SLPVA) | 4 m (13 ft) | 3.7 m (12.1 ft) | 3.4 m (11.2 ft) | 3.1 ft m (10.3 ft) | 2.8 m (9.2 ft) |
| 14 mm EZ-SCREEN® (SLS) | 6 m (20 ft) | 5.6 m (18.4 ft) | 5.2 m (17.0 ft) | 4.8 m (15.7 ft) | 4.4 m (14.5 ft) |
| EZ-SCREEN® LP (SLP) | 7 m (23 ft) | 6.5 m (21.2 ft) | 6.0 m (19.5 ft) | 5.5 m (18.0 ft) | 5.1 m (16.6 ft) |
| EZ-SCREEN® LS Basic (SLLV) | 8 m (26.2 ft) | 7.4 m (24.3 ft) | 6.8 m (22.3 ft) | 6.2 m (20.3 ft) | 5.7 m (18.7 ft) |
| EZ-SCREEN® LS (SLL) | 12 m (39 ft) | 11 m (36 ft) | 10.1 m (33 ft) | 9.3 m (30.5 ft) | 8.6 m (28 ft) |
| S4B Safety Light Curtain | 12 m (39 ft) | 11 m (36 ft) | 10.1 m (33 ft) | 9.3 m (30.5 ft) | 8.6 m (28 ft) |
| EZ-SCREEN® Type 2 (LS2) | 15 m (50 ft) | 13.8 m (45 ft) | 12.7 m (42 ft) | 11.7 m (38 ft) | 10.8 m (35 ft) |
| 30 mm EZ-SCREEN® (SLS) | 18 m (60 ft) | 16.8 m (55 ft) | 15.5 m (51 ft) | 14.3 m (47 ft) | 13.1 m (43 ft) |

See the specific mirror datasheet or www.bannerengineering.com for more information.

Mirrors are typically used with safety light screens to guard multiple sides of a hazardous area. If the safety light screen is muted, the safeguarding function is suspended on all sides. It must not be possible for an individual to enter the guarded area without being detected and a stop command issued to the machine control. Supplemental safeguarding, such as hard-guards, is normally provided by an additional device(s) that remains active while the Primary Safeguard is muted. Therefore, mirrors are typically not allowed for muting applications.

**WARNING:**

- **Do not safeguard multiple areas with mirrors or multiple sensing fields if personnel can enter the hazardous area while the system is muted and not be detected**
- Entering the hazardous area without being detected is dangerous and could result in serious injury or death.
- Verify all areas are guarded and a stop command is issued to the guarded machine when someone enters the hazardous area.


© Banner Engineering Corp. All rights reserved.

If mirrors are used, the difference between the angle of incidence from the emitter to the mirror and from the mirror to the receiver must be between 45° and 120° (see "Figure: Using EZ-SCREEN LPM sensors in a retroreflective mode" on page 27). If placed at a sharper angle, an object in the light screen may deflect beam(s) to the receiver, preventing the object from being detected, also know as false proxing. Angles greater than 120° result in difficult alignment and possible optical short circuits.

**WARNING:**
- **Retroreflective Mode Installation**
- Failure to follow these instructions may create unreliable sensing and may result in serious injury or death.
- Do not install emitters and receivers in retroreflective mode with less than a 45° angle of incidence. Install emitters and receivers at an appropriate angle.

*Figure 5. Using EZ-SCREEN LPM sensors in a retroreflective mode*

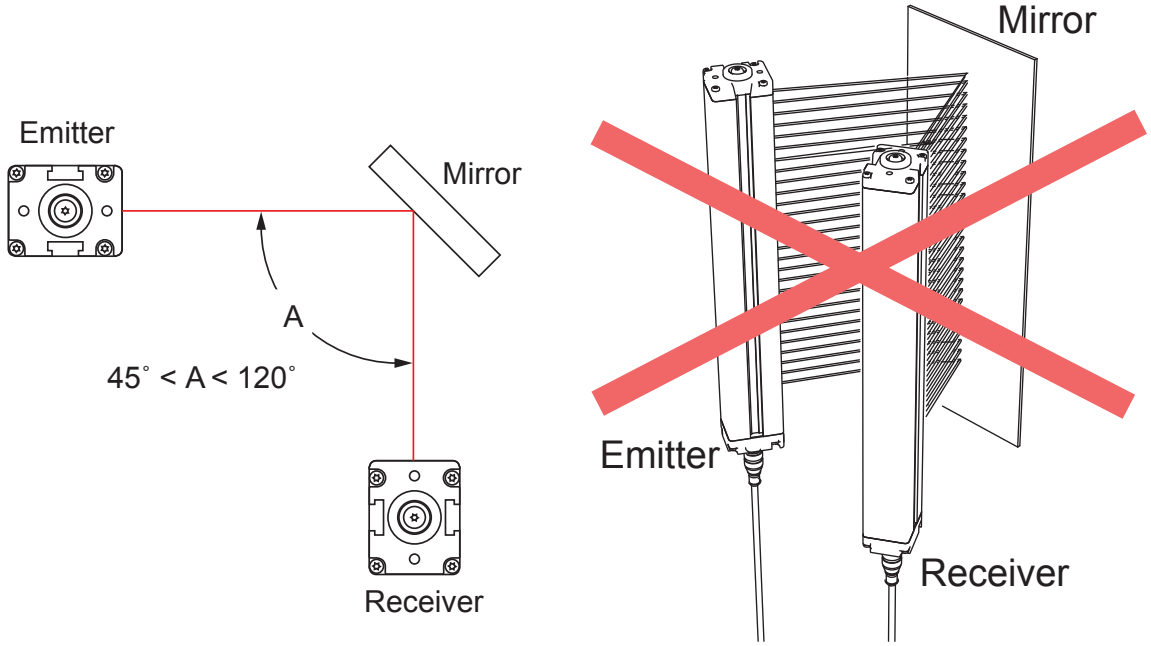


## 4.2.4 Emitter and Receiver Orientation

The emitter and receiver must be mounted parallel to each other and aligned in a common plane, with both machine interface cable ends pointing in the same direction.

Never mount the emitter with its machine interface cable end oriented in the opposite direction of the cable end of the receiver. If this occurs, voids in the light curtain may allow objects or personnel to pass through the defined area undetected.

The emitter and receiver may be oriented in a vertical or horizontal plane, or at any angle between horizontal and vertical, as long as they are parallel to each other and their cable ends point in the same direction. Verify that the light curtain completely covers all access to the hazard point that is not already protected by hard (fixed) guard or other supplemental guarding.

**WARNING:**
- **Properly install system components**
- Incorrectly orienting the system components impairs the performance of the system and results in incomplete guarding, which can result in serious injury or death.
- Install the system components with their corresponding cable ends pointing in the same direction.


© Banner Engineering Corp. All rights reserved.
www.bannerengineering.com

*Figure 6. Examples of Correct Emitter/Receiver Orientation*

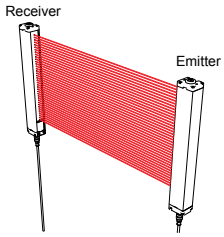


Both cable ends down

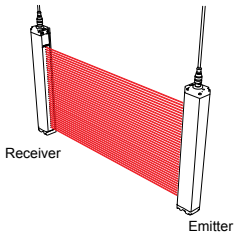


Both cable ends up

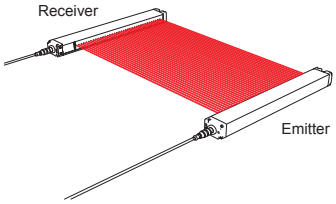


Orientation parallel to floor with both cable ends pointing in the same direction

*Figure 7. Examples of Incorrect Emitter/Receiver Orientation*

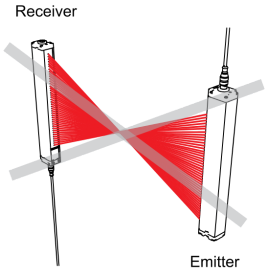


Cable ends point in opposite directions

**Problem:** Voids in defined area

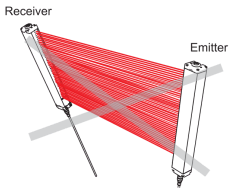


Emitter and receiver not parallel to each other

**Problem:** Reduced excess gain

## 4.2.5 Installation of Multiple Systems

Whenever two or more EZ-SCREEN LPM emitter and receiver pairs are adjacent to one another, optical crosstalk may take place between the systems. To minimize optical crosstalk, alternate the positions of the emitters and receivers or alternate Scan Codes.

When three or more systems are installed in the same plane (as shown), optical crosstalk may occur between sensor pairs whose emitter and receiver lenses are oriented in the same direction. In this situation, eliminate optical crosstalk by mounting these sensor pairs exactly in line with each other within one plane or by adding a mechanical barrier between the pairs.

To further aid in avoiding crosstalk, the sensors feature two selectable scan codes. A receiver set to one scan code will not respond to an emitter set to another code.

*Figure 8. Two systems installed in a horizontal plane*

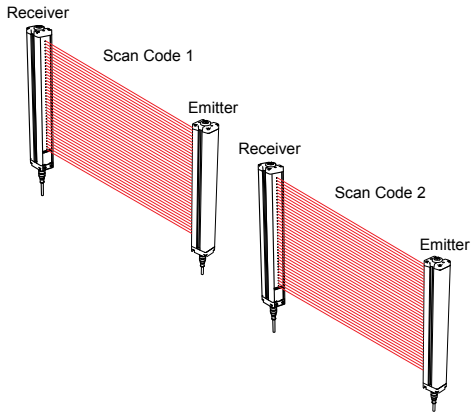


*Figure 9. Two or three systems stacked (or alternate receiver/emitter positions)*

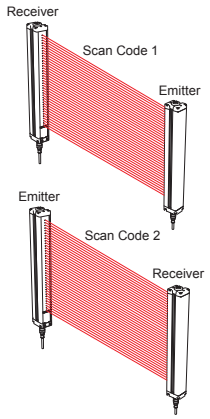


Continued on page 29


© Banner Engineering Corp. All rights reserved.
www.bannerengineering.com

Continued from page 28

*Figure 10. Two systems installed at right angles*

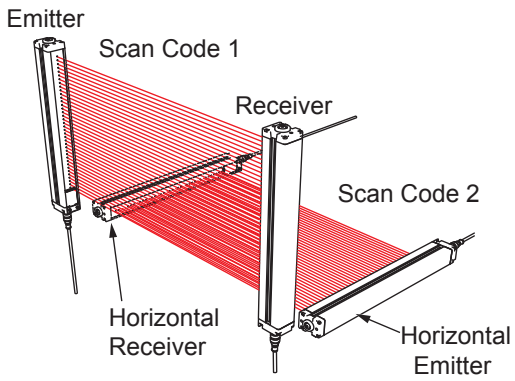


*Figure 11. Multiple systems installed in a line*

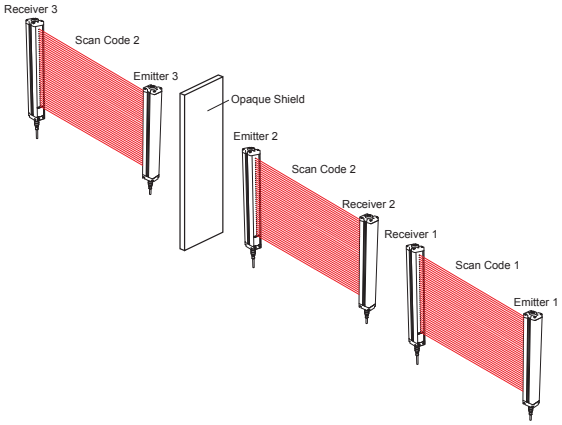


**WARNING:**

- **Properly connect multiple pairs of sensors**
- Connecting multiple output signal switching devices (OSSD) safety outputs to one interface module or otherwise parallel OSSD outputs can result in serious bodily injury or death, and is prohibited.
- Do not connect multiple pairs of sensors to a single device.

**WARNING:**

- **Use a scan code**
- If you do not use a scan code, a receiver can synchronize to the signal from the wrong emitter, reducing the safety function of the light curtain and creating an unsafe condition that could result in serious injury or death.
- Configure adjacent systems to use different scan codes (for example, set one system to use scan code 1 and the other system to use scan code 2). Perform a trip test to confirm the light curtain function.

# 4.3 Mounting System Components

## 4.3.1 Overview of Emitter-Receiver Mounting Hardware

### Mounting Hardware

Emitter/receiver pairs can be spaced from 0.1 m (4 in) to 7 m (23 ft) apart. This distance is reduced if corner mirrors are used.

Each sensor is shipped with two end-cap brackets (**LPA-MBK-11**) and at least two side-mount brackets (**LPA-MBK-12**). The supplied end-cap brackets allow 360° rotation. Side-mount brackets allow 30° rotation in one direction, and 10° in the other (see Mounting the End-Cap Brackets and Mounting Side-Mount Brackets). Sidemount brackets may be mounted on either or both sides of the housing. If additional rotation is required, see the available accessory brackets.

Center mounting brackets must be used with longer sensors, if they are subject to shock or vibration. In such situations, the sensors are designed to be mounted with up to 690 mm unsupported distance (between brackets). Sensors 830 mm and longer are supplied with one or more additional side brackets for center-mounting.


© Banner Engineering Corp. All rights reserved.
www.bannerengineering.com

## Mounting the LPA-MBK-11 End-Mount Brackets

*Figure 12. End-Mount Brackets*

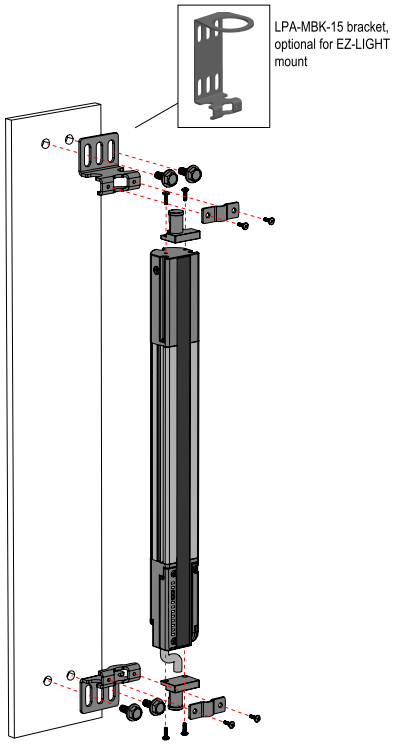


*Figure 13. 360° Rotation*

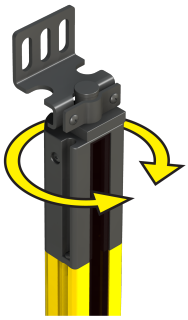

- Two brackets are supplied with each emitter and receiver.
- Brackets are designed to mount directly to MSA Series stands using the hardware supplied with the stands.
- See "Accessory Mounting Brackets" on page 94 for mounting bracket dimensions.

**IMPORTANT:** The connector ends of both sensors must point in the same direction (see "Emitter and Receiver Orientation" on page 27). Loosely mount the brackets to the desired surface using the supplied M5 bolts and nuts, or user-supplied hardware. Brackets may face in or out, as desired.

1. From a common point of reference (ensuring the calculated minimum safety distance), measure to position the emitter and receiver in the same plane, with their midpoints directly opposite each other.
2. Attach the end-cap bracket plate to each end of the sensor, using the supplied M3x6 screws.
3. Position the emitter and receiver in their brackets, as shown in "Emitter and Receiver Orientation" on page 27. Loosely attach the front bracket plate to the bracket, at each end.
4. Verify that the sensor windows directly face each other. Measure from a reference plane, for example, a level building floor, to the same point(s) on the emitter and receiver to verify their mechanical alignment. Use a carpenter's level, a plumb bob, or the optional LAT-1 Laser Alignment Tool (see "Alignment Aids" on page 96) or check the diagonal distances between the sensors, to achieve mechanical alignment. Final alignment procedures are explained in "Initial Checkout Procedure" on page 36.
5. Tighten all fasteners.


© Banner Engineering Corp. All rights reserved.
www.bannerengineering.com

## Mounting the LPA-MBK-12 Side-Mount Brackets

*Figure 14. Side-Mount Brackets*

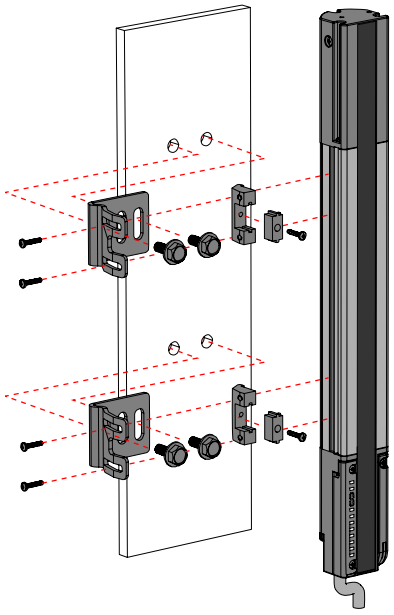

*Figure 15. 360° Rotation*

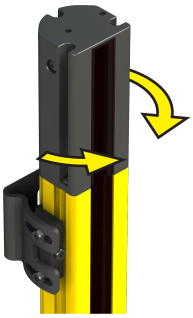

**NOTE:**

- Two or more side-mount brackets are supplied with each emitter and receiver. Emitters and Receivers 830 mm and longer also include an additional side-mount bracket for center support.
- The sensors are designed to be mounted with up to 690 mm of unsupported distance between brackets.

1. From a common point of reference (ensuring the calculated minimum safety distance), measure to locate the emitter and receiver in the same plane, with their midpoints directly opposite each other.

   **IMPORTANT:** The connector ends of both sensors must point in the same direction (see "Emitter and Receiver Orientation" on page 27).

2. Mount the emitter and receiver mounting brackets to the desired surface, using the supplied M5 bolts and nuts or user-supplied hardware.
3. Attach the 2-piece clamp to the sensor housing side channels (either side of the housing) at the appropriate locations, using the supplied M3 × 6 screws.
4. Attach the clamp to the bracket, using the supplied M5 screws.
5. Position the emitter and receiver windows directly facing each other. Measure from a reference plane, for example, a level building floor, to the same point(s) on the emitter and receiver to verify their mechanical alignment. Use a carpenter’s level, a plumb bob, or the optional LAT-1 Laser Alignment Tool (see "Alignment Aids" on page 96) or check the diagonal distances between the sensors, to achieve mechanical alignment. Final alignment procedures are explained in "Initial Checkout Procedure" on page 36.
6. Tighten all fasteners.

### Bracket Assembly Instructions

An M2 or #1 Phillips screwdriver is needed for access to the DIP switches and for preassembly of the mounting brackets. Final assembly (tightening) of the mounting bracket should be accomplished with a #1 Phillips screwdriver or 3/16 in. / 5 mm “thin-walled” nut driver to achieve the listed torque specifications. Sensors may be mounted with side-mount brackets, end-mount brackets, or a combination of both.


© Banner Engineering Corp. All rights reserved.
www.bannerengineering.com

*Figure 16. End-mount hardware attachment*

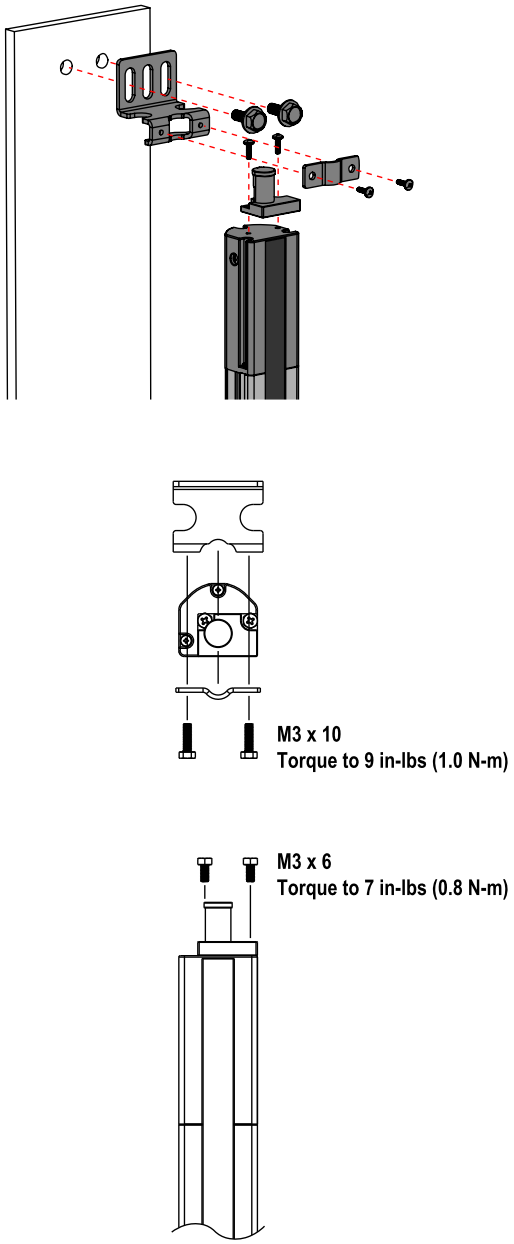


*Figure 17. Side-mount hardware attachment*

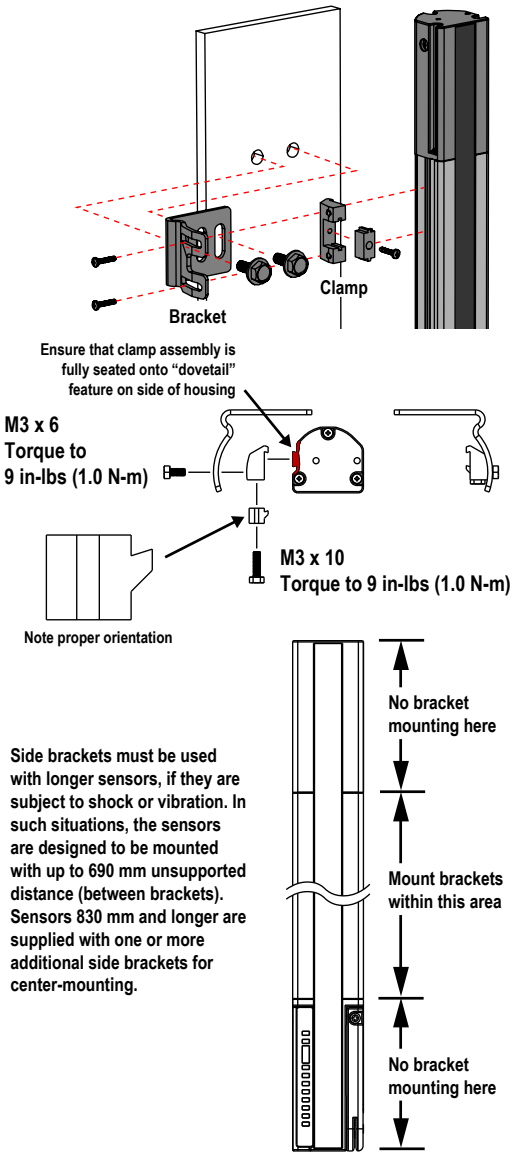


## 4.3.2 Sensor Mounting and Mechanical Alignment

**Verify that:**

- The emitter and receiver are directly opposite each other
- Nothing is interrupting the defined area
- The defined area is the same distance from a common reference plane for each sensor
- The emitter and receiver are in the same plane and are level/plumb and square to each other (vertical, horizontal, or inclined at the same angle, and not tilted front-to-back or side-to-side)


© Banner Engineering Corp. All rights reserved.
www.bannerengineering.com

*Figure 18. Incorrect Sensor Alignment*

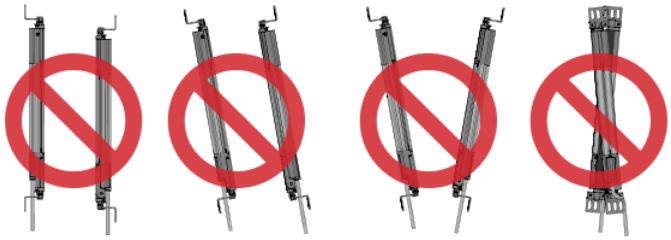

**Angled or Horizontal Installations – verify that:**

- Distance X at the emitter and receiver are equal
- Distance Y at the emitter and receiver are equal
- Distance Z at the emitter and receiver are equal from parallel surfaces
- Vertical face (the window) is level/plumb
- Defined area is square. Check diagonal measurements if possible. See Vertical Installations.

*Figure 19. For angled or horizontal installations*

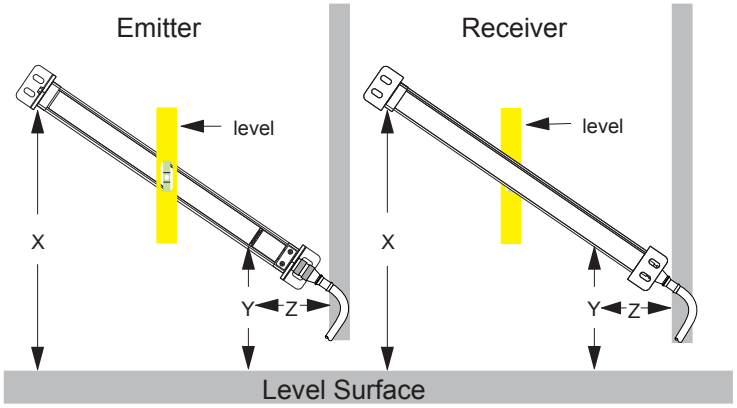


**Vertical Installations – verify that:**

- Distance X at the emitter and receiver are equal
- Both sensors are level/plumb (check both the side and face)
- Defined area is square. Check diagonal measurements if possible (Diagonal A = Diagonal B).

*Figure 20. For vertical installations*

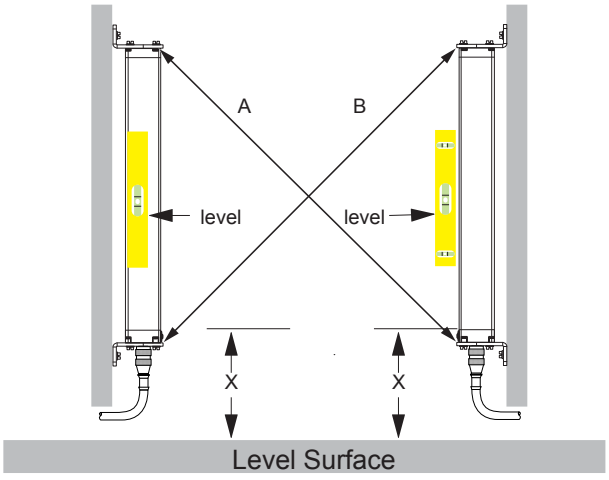



© Banner Engineering Corp. All rights reserved.
www.bannerengineering.com

Chapter Contents

5.1 Routing Cordsets ..... 34
5.2 Initial Electrical Connections ..... 35
5.3 Initial Checkout Procedure ..... 36
5.4 Electrical Connections to the Guarded Machine ..... 43
5.5 Reference Wiring Diagrams ..... 47

# Chapter 5 Electrical Installation and Testing

Follow these steps to electrically install the EZ-SCREEN LPM components and interface with the guarded machine.

**WARNING:**

- **Read this Section Carefully Before Installing the System**
- **Failure to follow these instructions could result in serious injury or death.**
- If all mounting, installation, interfacing, and checkout procedures are not followed properly, this Banner Engineering Corp. device cannot provide the protection for which it was designed.
- The user is responsible for ensuring that all local, state, and national laws, rules, codes, or regulations relating to the installation and use of this control system in any particular application are satisfied. Ensure that all legal requirements have been met and that all technical installation and maintenance instructions contained in this manual are followed.
- The user has the sole responsibility to ensure that this Banner Engineering Corp. device is installed and interfaced to the guarded machine by Qualified Persons, in accordance with this manual and applicable safety regulations. A Qualified person is a person who, by possession of a recognized degree or certificate of professional training, or who, by extensive knowledge, training and experience, has successfully demonstrated the ability to solve problems relating to the subject matter and work.

1. Routing cordsets and making initial electrical connections (see "Routing Cordsets" on page 34 and "Initial Electrical Connections" on page 35).
2. Apply power to each emitter/receiver pair (see "Initial Electrical Connections" on page 35).
3. Perform an Initial Checkout Procedure (see "Initial Checkout Procedure" on page 36).
4. Make all electrical interface connections to the guarded machine (see "Electrical Connections to the Guarded Machine" on page 43).
5. Perform a commissioning checkout procedure (see "Commissioning Checkout" on page 51).

## 5.1 Routing Cordsets

Attach the required cordsets to the sensors, and route the sensor cables to the junction box, electrical panel, or other enclosure in which the interface module, the redundant mechanically linked interposing relays, FSDs, or other safety-related parts of the control system are located.

This must be done per local wiring code for low-voltage DC control cables and may require installation of electrical conduit. See "Cordsets" on page 83 for selection of Banner supplied cables.

**NOTE:** The machine interface cable must connect to the sensor end adjacent to the indicators for the System to operate properly.

EZ-SCREEN LPM is designed and manufactured to be highly resistant to electrical noise and to operate reliably in industrial settings. However, extreme electrical noise may cause a random Trip or Latch condition; in extreme cases, a Lockout is possible.

Emitter and receiver wiring is low voltage; routing the sensor wires alongside power wires, motor/servo wires, or other high voltage wiring may inject noise into the EZ-SCREEN LPM System. It is good wiring practice, and sometimes may be required by code, to isolate emitter and receiver cables from high-voltage wires, avoid routing cables close to “noisy” wiring, and provide a good connection to earth ground.


© Banner Engineering Corp. All rights reserved.
www.bannerengineering.com

Sensor cabling and any interconnect wiring should have an insulation temperature rating of at least 90 °C (194 °F).

For SLP....-... sensors:

1. Slide the RD connector firmly into the housing's RD port. (Verify the rectangular gasket is installed.)

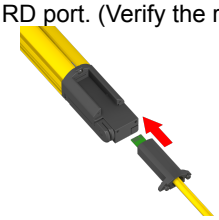

2. Tighten the Phillips screws at the base of the connector to lock into place.

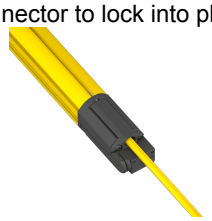

## 5.2 Initial Electrical Connections

**WARNING:**

- **Risk of electric shock**
- Use extreme caution to avoid electrical shock. Serious injury or death could result.
- Always disconnect power from the safety system (for example, device, module, interfacing, etc.), guarded machine, and/or the machine being controlled before making any connections or replacing any component. Lockout/tagout procedures might be required. Refer to OSHA 29CFR1910.147, ANSI Z244-1, or the applicable standard for controlling hazardous energy.
- Make no more connections to the device or system than are described in this manual. Electrical installation and wiring must be made by a Qualified Person[4] and must comply with the applicable electrical standards and wiring codes, such as the NEC (National Electrical Code), NFPA 79, or IEC 60204-1, and all applicable local standards and codes.

Following relevant electrical standards and wiring codes, such as the NEC, NFPA79 or IEC60204-1, always connect the earth ground (green/yellow wire). **Do not operate the EZ-SCREEN LPM without an earth ground connection.**

Make the electrical connections in the order described in this section. Do not remove end-caps; no internal connections are to be made. All connections are made through the RD or pigtail QD connections.

**Emitter Cordset**

EZ-SCREEN LPM emitters have an 8-pin cordset, but not all conductors are used.

**Receiver Cordset**

**Do not connect any wires to the machine control circuits (OSSD outputs) at this time.** For the initial power-up and checkout, External Device Monitoring (EDM) must be disabled. Locate the orange wire (pin 9) and temporarily connect the end of the wire to +24 V dc (brown wire pin 2), but not to the machine at this time. Take precautions to prevent the wires from shorting to ground or to other sources of energy (for example, terminate with a wire-nut). Final EDM wiring must be completed later.

If used, connect the external reset switch to the reset wire (violet, pin 12) on the receiver cable and to 24 V DC (see "Generic Emitter Wiring Diagram" on page 47 ). See the warning in "Reset Switch Location" on page 24 about the physical location of the reset switch. The reset switch must be a normally open switch that is held closed for approximately 0.25 second, but no longer than 2 seconds, and then re-opened to accomplish the reset. The switch must be capable of switching 10 to 30 V DC at 30 mA.

[4] A person who, by possession of a recognized degree or certificate of professional training, or who, by extensive knowledge, training and experience, has successfully demonstrated the ability to solve problems relating to the subject matter and work.


© Banner Engineering Corp. All rights reserved.
www.bannerengineering.com

| Maximum Machine Interface Cordset Length[5] | | | | | |
|---|---|---|---|---|---|
| Total Load Current (OSSD 1 + OSSD 2 + Aux Out) in Amps | | | | | |
| 0.1 | 0.25 | 0.5 | 0.75 | 1.0 | 1.25 |
| 73 m (240 ft) | 53 m (175 ft) | 37 m (120 ft) | 28 m (91 ft) | 23 m (75 ft) | 19 m (62 ft) |

**NOTE:** Emitter and receiver power (current) requirements are accounted for. The above values represent additional current draw that must be accounted for.

**NOTE:** Maximum cable lengths are intended to ensure that adequate power is available to the EZ-SCREEN LPM Receiver when the supply is operating at +24 V DC - 15%

# 5.3 Initial Checkout Procedure

The initial checkout procedure must be performed by a Qualified Person. It must be performed only after configuring the System and after connecting the components.

Perform this procedure to:

- Ensure proper installation when the System is first installed
- Ensure proper System function whenever any maintenance or modification is performed on the System or on the machinery that is guarded by the System.

## 5.3.1 Configuring the System for Initial Checkout

Verify that the emitter and receiver are both set to the factory defaults for initial checkout and optical alignment. Receiver factory defaults are for trip output, reduced resolution Off, aux output, inverted display Off, and scan code 1. Emitter factory defaults are for reset, fault output Off, inverted display Off, and scan code 1.

For the initial checkout, the EZ-SCREEN LPM System must be checked without power available to the guarded machine. Final interface connections to the guarded machine cannot take place until the light screen system has been checked out. This may require lockout/tagout procedures (refer to OSHA1910.147, ANSI Z244-1, ISO 14118, or the appropriate standard for controlling hazardous energy). The OSSD connections will be made after the initial checkout procedure has been successfully completed.

Verify that:

- Power has been removed from (or is not available to) the guarded machine and its controls or actuators
- The machine control circuit or the Safety/Interface Module is not connected to the OSSD outputs at this time (permanent connections will be made later)
- EDM is configured for *no monitoring*, see "External Device Monitoring" on page 46

## 5.3.2 Initial Power-Up

1. Inspect the area near the light screen for reflective surfaces, including work pieces and the guarded machine. Reflective surfaces may cause light beams to reflect around a person in the light screen, preventing the person from being detected and not stopping the machine motion (see "Adjacent Reflective Surfaces" on page 25).
2. Eliminate the reflective surfaces as much possible by relocating, painting, masking, or roughening them. Remaining problem reflections will become apparent during the trip test.
3. Verify that power is removed from the EZ-SCREEN LPM System and from the guarded machine and that the OSSD safety outputs are not connected.
4. Remove all obstructions from the light screen.
5. Leaving power to the guarded machine Off, make power and earth ground connections on both the emitter and receiver cables (see "Generic Emitter Wiring Diagram" on page 47).
6. Power up the EZ-SCREEN LPM System only.
7. Verify that the input power is present to both the emitter and the receiver. At least one indicator on both the emitter and the receiver should be On and the start-up sequence should cycle.
8. Watch both the emitter and the receiver Status indicators, 7-segment displays, and the receiver Zone indicators to determine the light screen alignment status. Refer to "Status Indicators" on page 71. If in a lockout condition, proceed

[5] RDLP-12..E or QDE-12..E model cordsets.


© Banner Engineering Corp. All rights reserved.
www.bannerengineering.com

to "Troubleshooting" on page 77. If not in a lockout condition, proceed to "Optical Alignment of the EZ-SCREEN LP with Muting Models" on page 37.

- **Lockout Condition**—the emitter Status indicator is single-flashing Red; the receiver Status indicator is On Red, and the 7-segment display reads **CH1**.
- **Receiver Lockout Condition** —the receiver Status indicator is single-flashing Red, with Zone and Reset indicators Off; the receiver 7-segment display shows an Error Code.
- **Normal Operating Mode** (emitter)—The Status indicator is On Green.
- **Receiver Latch Condition, all optical beams clear**—the receiver Status indicator is On Red and the Reset indicator double-flashing Yellow; Zone indicators On Green. When the receiver is configured for Latch Output, the outputs are On only when all beams are clear and after a manual reset. If a reset routine can cause a Clear (Run) condition, optimize the alignment as described in the following section. If a Clear (Run) condition cannot be achieved, see “Blocked condition” below.
- **Clear (Run) Condition** (receiver)—The Status indicator is On Green (or flashing Green if reduced resolution is enabled), and the Reset indicator is On Yellow. All Zone indicators are On Green.
- **A Blocked Condition** (receiver)—The Status indicator is On Red, the yellow Reset indicator is On, one or more Zone indicator(s) are On Red, identifying the location of the blocked beams, and the number of blocked beams is displayed. Proceed to "Optical Alignment of the EZ-SCREEN LP with Muting Models" on page 37.

**NOTE:** If beam 1 is blocked, Zone indicator 1 is Red and all others are Off. Beam 1 provides the synchronization signal.

**NOTE:** If the emitter Test input is open (when enabled), the receiver's 7-segment Display will indicate the total number of beams in the system (minus one) and all Zone indicators will be Red.

See "Status Indicators" on page 71 for indicator and display information.

### 5.3.3 Optical Alignment of the EZ-SCREEN LP with Muting Models

**WARNING:**
- **Hazard exposure**
- Failure to follow these instructions could result in serious injury or death.
- Verify that no individuals are exposed to any hazard if the output signal switching device (OSSD) outputs turn on when the emitter and receiver become aligned.

Verify the sensor mounting, see "Mounting System Components" on page 29.
Verify that the mute devices are not signaling a mute condition (M1 and M2 inputs are open).
Verify the optimal alignment by adjusting the sensor rotation with the power On:

1. Verify that the emitter and the receiver are pointed squarely at each other. Use a straight edge (for example, a level) to determine the direction the sensor is facing. The sensor face must be perpendicular to the optical axis.

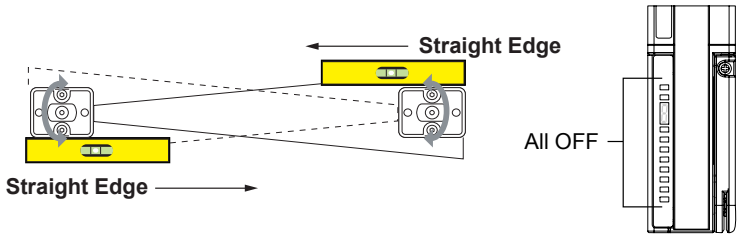


**NOTE:** At power-up, all indicators are tested (flash), then the Scan Code and Mute Configuration are alternately displayed.

2. Turn On power to emitter and receiver. If the Channel #1 beam is not aligned, the Status and Zone 1 indicators are Red, the Reset indicator is Off, and the 7-segment display sequentially indicates **CH1**. Zone indicators 2–6 will be Off.


© Banner Engineering Corp. All rights reserved.
www.bannerengineering.com

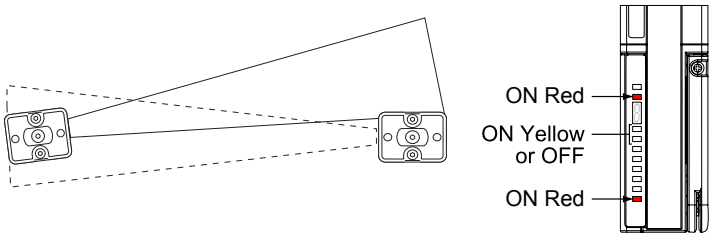


3. If the Green Status and Yellow Reset indicators are On, go to the next step. If not, rotate each sensor (one at a time) left and right until the Green Status indicator is On. (As the sensor rotates out of alignment, the Red Status indicator turns On). As more beams are aligned, the Zone indicators turn from Red to Green and the number of blocked beam indicators decreases.

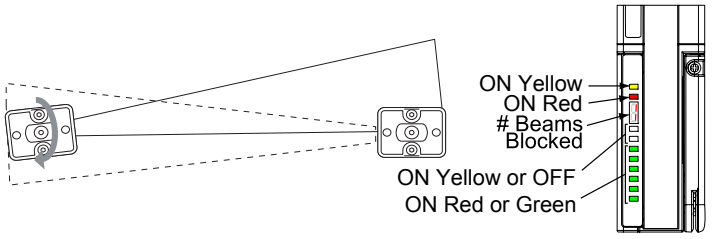


4. Optimize alignment and maximize excess gain.
    a. Slightly loosen the sensor mounting screws.
    b. Rotate one sensor left and right, noting the positions in each arc where the Status indicators turn Red (Blocked condition); repeat with the other sensor.
    c. Center each sensor between those two positions.
    d. Tighten the mounting screws, making sure to maintain the positioning as the screws are tightened.

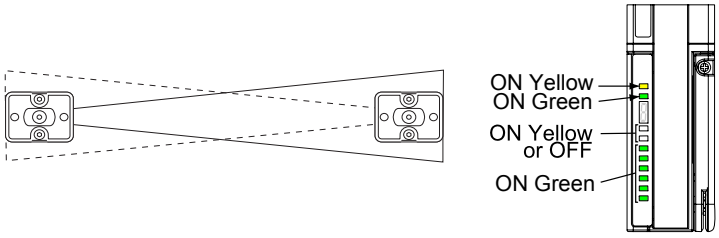


For situations where alignment is difficult, a LAT-1-LP Laser Alignment Tool can be used to assist or confirm alignment by providing a visible red dot along the sensor's optical axis.

**NOTE:** If at any time the Red Status indicator begins to flash steadily, the System has entered a Lockout condition. See "Troubleshooting" on page 77 for further information.

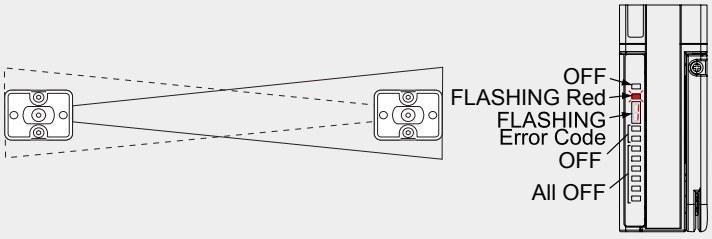


## 5.3.4 Optical Alignment Procedure with Mirrors

EZ-SCREEN LPM sensors may be used with one or more corner mirrors for guarding more than one side of an area. The SSM rear-surface glass mirrors are rated at 85% efficiency. Thus, excess gain and sensing range are reduced when using mirrors; see "Use of Corner Mirrors" on page 26.

During any adjustments, allow only one individual to adjust any one item at any one time. In addition to the standard optical alignment procedure, verify:


© Banner Engineering Corp. All rights reserved.
www.bannerengineering.com

1. The emitter, receiver, and all mirrors are level and plumb.
2. The middle of the defined area and the center point of the mirrors are approximately the same distance from a common reference point, such as the same height above a level floor.
3. There are equal amounts of mirror surface above and below the defined area such that the optical beams are not passing below or above the mirror.

**NOTE:** An LAT-1 Laser Alignment Tool is very helpful by providing a visible red dot along the optical axis. See "Alignment Aids" on page 96, "Figure: Optical alignment using the LAT-1" on page 39, and Banner Safety Applications Note SA104 (p/n 57477) for more information.

*Figure 21. Optical alignment using the LAT-1*

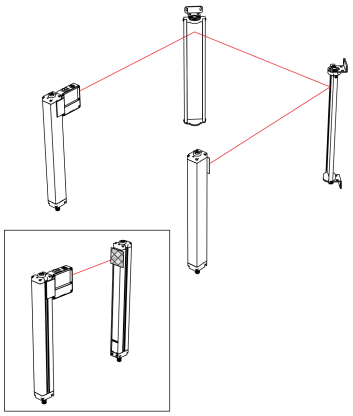

*Figure 22. Corner Mirror Alignment*

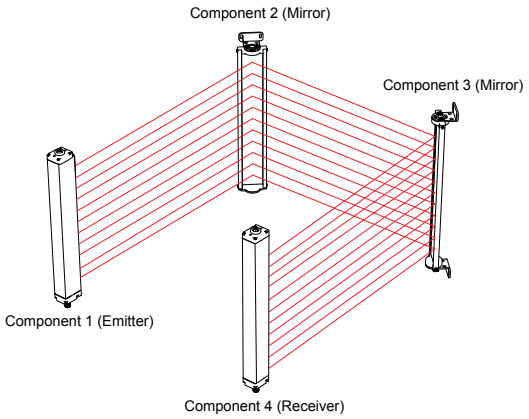


## 5.3.5 Mute Configuration

1. From either normal operation or a power OFF condition, set the first and fourth DIP switches (T/L and the second Red Res) both to the left (Trip operation and Reduced Resolution On positions). See "System Configuration Settings" on page 66.
2. Set the second and third DIP switches (Red Res and the second T/L) both to the right (Reduced Resolution Off and Latch positions).
3. The receiver should now either be in a lockout condition or power is still OFF.
4. **If power is Off:** Apply power. The receiver display should now alternate between the Scan Code (C1 or C2) and the mute configuration option currently set (01-08, factory default is 06). It will do this for three cycles, then display only the mute configuration option (1-8). A corresponding number of green indicators will match the number shown on the display. The Status indicator will be red, and all other indicators will be off.
   **If the receiver had been in normal operation in step 1:** perform a system reset as described in "Reset Procedures" on page 78. The receiver display should now show the mute configuration option currently set (1-8, factory default is 6). A corresponding number of green indicators will match the number shown on the display. The Status indicator will be red, and all other indicators will be off.
5. **Select the desired mute configuration option: (see "Muting Functions" on page 54)**
   - Toggling the Invert Display switch will sequence through the mute configuration options. The initial Invert switch setting does not matter.
   - For the Invert switch setting shown below (Invert Display off), move the switch to the left, then back to the right (original setting). The mute configuration will sequence to the next option. The display and number of green indicators will change accordingly. Repeat this until the desired mute configuration option is reached.
6. When the desired mute configuration option is reached, lock in the mute configuration by setting the DIP switches for normal operation (see "System Configuration Settings" on page 66 and "Figure: Accessing the configuration switches" on page 66).

   **NOTE:** 10 minutes is allowed for setting the mute configuration before a lockout condition will occur. See "Receiver Error Codes" on page 79.

7. Perform a valid reset sequence or cycle power.


© Banner Engineering Corp. All rights reserved.
www.bannerengineering.com




*Figure 23. DIP switch settings to program mute configuration options*

## 5.3.6 Reduced Resolution (Floating Blanking)

Reduced Resolution increases the minimum diameter of an object that the light screen can reliably detect anywhere within its defined area. This allows objects of a certain maximum size to interrupt the defined area without causing a Trip condition (that is, the OSSDs turn Off).

Use Reduced Resolution only when necessary. In reduced-resolution applications, the safety (minimum) distance always increases due to the larger depth penetration factor (Dpf). In either case, see "Calculating the Safety Distance (Minimum Distance)" on page 19 to determine safety distance.

*Figure 24. Reduced Resolution*

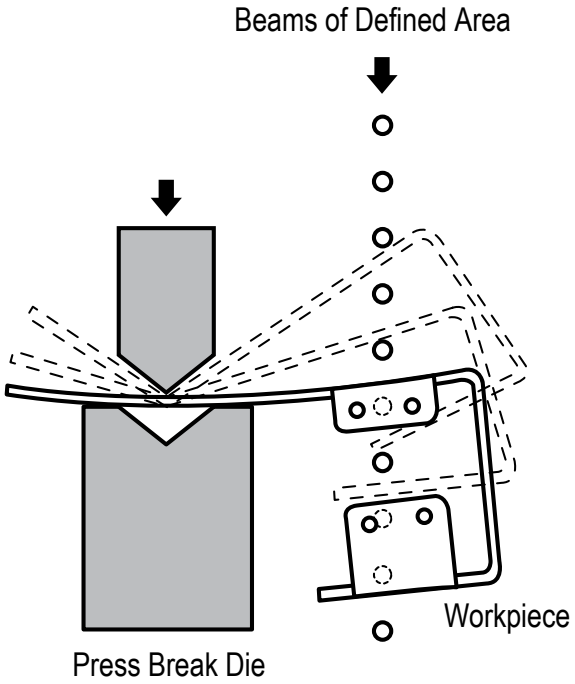


With 2-beam reduced resolution enabled, any two consecutive beams (except for the sync beam), can be blocked without causing a stop condition. Thus, multiple "holes" are created in which 14 mm systems will detect a 34 mm object and ignore a 16 mm object. Similarly, 25 mm sensors will detect a 65 mm object and ignore a 36 mm object. See "Figure: Accessing the configuration switches" on page 66 for DIP-switch configuration. During operation, the green Status indicator flashes when reduced resolution is enabled.


© Banner Engineering Corp. All rights reserved.
www.bannerengineering.com

**WARNING:**

- **Use reduced resolution and fixed blanking only when necessary**
- Failure to follow these instructions could result in serious injury or death.
- Completely fill any holes created in the sensing field with the blanked object or increase the safety (minimum) distance to account for the larger resolution.

| Model | Reduced Resolution Setting | Maximum Size of Undetected Objects | Resulting Resolution |
|---|---|---|---|
| 14 mm Resolution | Off | (Not Applicable) | 14 mm (0.55 in) |
| | On (2-beam) | 16 mm (0.63 in) | 34 mm (1.34 in) |
| 25 mm Resolution | Off | (Not Applicable) | 25 mm (0.98 in) |
| | On (2-beam) | 36 mm (1.42 in) | 65 mm (2.56 in) |

## 5.3.7 Fixed Blanking

Fixed blanking disables beams that would otherwise be continually blocked by a stationary object, such as tooling.

One or multiple areas within an EZ-SCREEN LPM sensor pair may be “blanked out,” with a minimum of one beam between two blanked areas. Any beam other than the sync beam may be blanked. All beams of a fixed blanked area must remain blocked during operation for the OSSDs to stay ON.

A flashing green Zone indicator denotes the location of a blanked area. If the object is either moved or removed, the System goes into Lockout mode, ensuring that an unexpected hole in the sensing field is not created.

### Configure Fixed Blanking

1. From either normal operation or a power-off condition, set the first and second DIP switches (T/L and Red Res) both to the left (Trip operation and Reduced Resolution enabled positions). See "System Configuration Settings" on page 66.
2. Set the third and fourth DIP switches (the second T/L and Red Res) both to the right (Latch operation and Reduced Resolution Off positions). The receiver should now either be in a lockout condition or the power is still OFF.

*Figure 25. DIP switch configuration to teach fixed blanking*

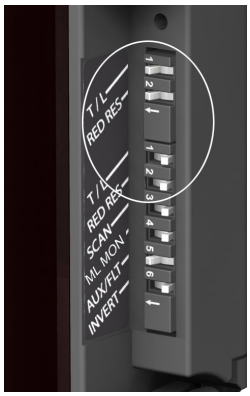


1. **With Power On:** Position object(s) in the defined area.
2. Set T/L and Red Res switches as shown (do not change SC2/SC1 or E1/E2 switch positions).
3. Press the Reset button or cycle power.
4. Reconfigure DIP switches for normal operation.
5. Press the Reset button or cycle power.

3. If power is Off: Apply power.
   In a lockout condition: Perform a valid reset sequence (close the reset switch for 0.25 to 2 seconds, then reopen it).
4. Observe the Fixed Blanking configuration, which is indicated by:
   - Display sequentially displays “PFA” (program fixed blanking active) and the number of blocked beams (“0” if all beams are clear).
   - Zone indicators active
   - Reset indicator Off
   - Status indicator On Red
5. Position the object(s) to be blanked (or remove the objects that will no longer be blanked).


© Banner Engineering Corp. All rights reserved.
www.bannerengineering.com

> **NOTE:** When any beams are blocked, the 7-segment display sequentially displays “PFA” and the number of blocked beams. The zone indicators remain active and denote the location of blocked beams.

6. To teach the blanked beams, re-configure DIP switches for normal operation (see "System Configuration Settings" on page 66).
7. Verify that only the objects to be blanked are interrupting the defined area. A lockout will occur if an object is moved or removed after teaching.
   The receiver indicates:
   - Display: sequentially displays “PFC” (PFC = Program Fixed Blanking Complete)
   - Zone indicators flash approximate location of fixed blanked area programmed
   - Reset indicator single-flashing Yellow
   - Status indicator single-flashing Red
8. Perform a valid reset sequence (see Step 3) or cycle power.
9. To disable fixed blanking, follow this same procedure, but remove all objects not to be blanked at Step 5.

## 5.3.8 Perform a Trip Test

Perform a trip test to verify the detection capability of the system.

After optimizing the optical alignment and configuring fixed blanking , muting, and/or reduced resolution (if applicable), perform the trip test to verify the detection capability of the EZ-SCREEN LPM System.

This test also verifies correct sensor orientation, identifies optical short circuits, and verifies the expected resolution for applications using reduced resolution. After the installation has passed the trip test, the safety outputs may be connected and the commissioning checkout may be performed (initial installations only).

1. Select the proper test piece supplied with the receiver.

*Table 5. Appropriate Test Pieces for Trip Test*

| Reduced Resolution | 14 mm Resolution Models | 25 mm Resolution Models |
|---|---|---|
| Off | 14 mm (0.55 in) dia. Model STP-13 | 25 mm (0.98 in) dia. Model STP-16 |
| On (2-beam) | 34 mm (1.34 in) dia. Model STP-17 | 65 mm (2.56 in) dia. Model STP-18 |

2. Verify that the System is in Run mode, the Green Status indicator is On (or flashing if reduced resolution is enabled), all Zone indicators are green, and the amber Status indicator is On. A manual reset may be required in Latch mode.
3. Pass the specified test piece through the defined area in three paths: near the emitter, near the receiver, and midway between the emitter and receiver.

*Figure 26. Trip Test*

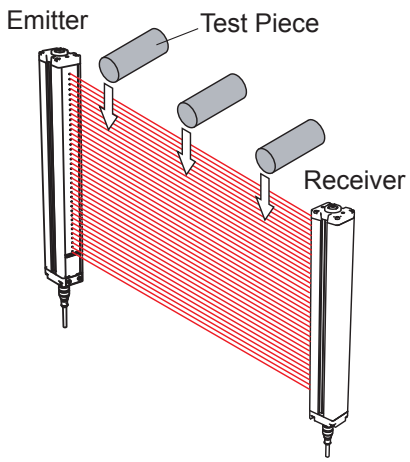


4. During each pass, while the test piece is interrupting the defined area, **at least one Zone indicator must be Red. The Red Zone indicator must change with the position of the test piece within the defined area.**


© Banner Engineering Corp. All rights reserved.
www.bannerengineering.com

- Trip Output Operation: The Status indicator must turn red and remain red for as long as the test piece remains in the defined area. If not, the installation has failed the trip test.
- Latch Output Operation: The Status indicator must turn red and remain red. The amber Reset indicator must remain ON steady. If the Reset indicator begins to flash at any time while the test piece is interrupting the defined area, the installation has failed the trip test.

If all Zone indicators turn green or fail to follow the position of the test piece while it is within the defined area, the installation has failed the trip test. Check for correct sensor orientation , reflective surfaces, and unguarded areas created due to the use of Blanking. Do not continue until the situation is corrected.

When the test piece is removed from the defined area, in trip output operation, the green Status indicator must turn on (or flash green, if reduced resolution is enabled). In latch output operation, the Status indicator will remain red until a manual reset is performed (the amber Reset indicator will be flashing).

**WARNING:**
- **Trip test failure**
- Using a system that has failed a trip test can result in serious bodily injury or death. If the trip test has failed, the system might not stop dangerous machine motion when a person or object enters the sensing field.
- Do not attempt to use the system if the system does not respond properly to the trip test.

5. If mirrors are used in the application: Test the defined area on each leg of the sensing path (for example, emitter to mirror, between mirror and receiver).

*Figure 27. Trip Test with Corner Mirror*

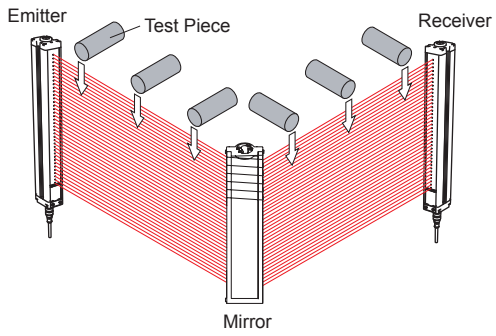


6. If the EZ-SCREEN LPM System passes all checks during the trip test, go on to "Electrical Connections to the Guarded Machine" on page 43.

# 5.4 Electrical Connections to the Guarded Machine

Verify that power has been removed from the EZ-SCREEN LPM and the guarded machine. Make the permanent electrical connections as described in "Output Signal Switching Device (OSSD) Output Connections" on page 44 and "Final Switching Devices (FSD) Interfacing Connections" on page 44 as required by each individual application.

Lockout/tagout procedures may be required (refer to OSHA 1910.147, ANSI Z244-1, ISO 14118, or the appropriate standard for controlling hazardous energy). Follow relevant electrical standards and wiring codes, such as the NEC, NFPA79 or IEC 60204-1.

Supply power and external device monitoring (EDM) should already be connected. The EZ-SCREEN LPM must also have been aligned and passed the Initial Checkout, as described in "Initial Checkout Procedure" on page 36.

The final connections to be made or verified are:

- OSSD outputs (see "Output Signal Switching Device (OSSD) Output Connections" on page 44)
- FSD interfacing (see "Final Switching Devices (FSD) Interfacing Connections" on page 44)
- MPCE/EDM (see "Machine Primary Control Elements and EDM Input" on page 45)
- Remote Test


© Banner Engineering Corp. All rights reserved.
www.bannerengineering.com

**WARNING:**
- **Risk of electric shock**
- Use extreme caution to avoid electrical shock. Serious injury or death could result.
- Always disconnect power from the safety system (for example, device, module, interfacing, etc.), guarded machine, and/or the machine being controlled before making any connections or replacing any component. Lockout/tagout procedures might be required. Refer to OSHA 29CFR1910.147, ANSI Z244-1, or the applicable standard for controlling hazardous energy.
- Make no more connections to the device or system than are described in this manual. Electrical installation and wiring must be made by a Qualified Person[6] and must comply with the applicable electrical standards and wiring codes, such as the NEC (National Electrical Code), NFPA 79, or IEC 60204-1, and all applicable local standards and codes.

### 5.4.1 Output Signal Switching Device (OSSD) Output Connections

Both the output signal switching device (OSSD) outputs must be connected to the machine control so that the machine's safety-related control system interrupts the circuit or power to the machine primary control element(s) (MPCE), resulting in a non-hazardous condition.

The final switching device(s) (FSDs) typically accomplish this when the OSSDs go to an OFF state.

Refer to the output specifications in "Specifications" on page 14 and these warnings before making OSSD output connections and interfacing the EZ-SCREEN LPM to the machine.

**WARNING:**
- **Interfacing both output signal switching devices (OSSD)**
- Failure to follow these instructions could result in serious injury or death.
- Unless the same degree of safety is maintained, never wire an intermediate device(s) (PLC, PES, PC) between the safety module outputs and the master stop control element it switches such that a failure causes a loss of the safety stop command or the failure allows the safety function to be suspended, overridden, or defeated.
- Connect both OSSD outputs to the machine control so that the machine's safety-related control system interrupts the circuit to the machine primary control element(s), resulting in a non-hazardous condition.

**WARNING:**
- **OSSD Interfacing**
- Failure to properly interface the OSSD Outputs to the guarded machine could result in serious injury or death.
- To ensure proper operation, the Banner device output parameters and machine input parameters must be considered when interfacing the Banner device OSSD outputs to machine inputs. Design machine control circuitry so that all of the following are true:

  The maximum load resistance value is not exceeded.
  The maximum specified OSSD OFF-state voltage does not result in an ON condition.

### 5.4.2 Final Switching Devices (FSD) Interfacing Connections

The final switching device(s) (FSDs) take many forms. The most common are forced-guided devices, mechanically linked relays, or interface modules. The mechanical linkage between the contacts allows the device to be monitored by the external device monitoring (EDM) circuit for certain failures.

Depending on the application, the use of FSDs can facilitate controlling voltage and current that differs from the output signal switching device (OSSD) outputs of the EZ-SCREEN LPM. FSDs can also be used to control an additional number of hazards by creating multiple safety stop circuits.

[6] A person who, by possession of a recognized degree or certificate of professional training, or who, by extensive knowledge, training and experience, has successfully demonstrated the ability to solve problems relating to the subject matter and work.


© Banner Engineering Corp. All rights reserved.

### Protective Stop (Safety Stop) Circuits

A protective stop (safety stop) allows for an orderly cessation of motion for safeguarding purposes, which results in a stop of motion and removal of power from the MPCEs (assuming this does not create additional hazards).

A protective stop circuit typically comprises a minimum of two normally open contacts from forced-guided, mechanically linked relays, which are monitored through external device monitoring (EDM) to detect certain failures to prevent the loss of the safety function. Such a circuit can be described as a "safe switching point". Typically, protective stop circuits are either single-channel, which is a series connection of at least two normally open contacts; or dual-channel, which is a separate connection of two normally open contacts. In either method, the safety function relies on the use of redundant contacts to control a single hazard. If one contact fails On, the second contact arrests the hazards and prevents the next cycle from occurring. See "Generic Receiver Wiring to FSDs (manual reset)" on page 48.

The interfacing of the protective stop circuits must be accomplished so that the safety function cannot be suspended, overridden, or defeated unless accomplished in a manner of the same or greater degree of safety as the machine's safety-related control system that includes the EZ-SCREEN LPM.

The normally open safety outputs from an interface module provide a series connection of redundant contacts that form protective stop circuits for use in either single-channel or dual-channel control. See "Generic Receiver Wiring to FSDs (manual reset)" on page 48.

### Dual-Channel Control

Dual-channel control provides the ability to electrically extend the safe switching point beyond the FSD contacts.

With proper monitoring, this method of interfacing is capable of detecting certain failures in the control wiring between the safety stop circuit and the MPCEs. These failures include a short-circuit of one channel to a secondary source of energy or voltage, or a loss of the switching ability of one of the FSD outputs. Such failures may lead to a loss of redundancy, or to a complete loss of safety, if not detected and corrected.

The possibility of a failure to the wiring increases as the physical distance between the FSD safety stop circuits and the MPCEs increases, as the length or the routing of the interconnecting wires increases, or if the FSD safety stop circuits and the MPCEs are located in different enclosures. For this reason, dual-channel control with external device monitoring (EDM) should be used in any installation where the final switching device(s) (FSDs) are located remotely from the machine primary control element(s) (MPCEs).

### Single-Channel Control

Single-channel control uses a series connection of final switching device contacts to form a safe switching point.

After this point in the machine's safety-related control system, failures can occur that would result in a loss of the safety function (such as a short-circuit to a secondary source of energy or voltage). For this reason, single-channel control interfacing should be used only in installations where final switching device (FSD) safety stop circuits and the machine primary control element(s) (MPCEs) are mounted within the same control panel, adjacent to each other, and are directly connected to each other; or where the possibility of such a failure can be excluded. If this cannot be achieved, then dual-channel control should be used.

Methods to exclude the possibility of these failures include, but are not limited to:

- Physically separating interconnecting control wires from each other and from secondary sources of power
- Routing interconnecting control wires in separate conduit, runs, or channels
- Locating all elements (modules, switches, and devices under control) within one control panel, adjacent to each other, and directly connected with short wires
- Properly installing multi-conductor cabling and multiple wires through strain relief fittings. Over-tightening of a strain-relief device can cause short circuits at that point.
- Using positive-opening or direct-drive components, installed and mounted in a positive mode

## 5.4.3 Machine Primary Control Elements and EDM Input

Each of the two Machine Primary Control Elements (MPCE1 and MPCE2) must be capable of immediately stopping the dangerous machine motion, irrespective of the state of the other. A machine primary control element (MPCE) is an electrically powered element that directly controls the normal operation of a machine in such a way that it is the last element (in time) to function when machine operation is to be initiated or arrested (per IEC 61496-1). Examples include motor contactors, clutch/brakes, valves, and solenoids.

Depending on the level of risk of harm, it may be required to provide redundant MPCEs or other control devices that are capable of immediately stopping the dangerous machine motion, irrespective of the state of the other. These two machine control channels need not be identical (diverse redundant), but the stop time performance of the machine (Ts, used to calculate the safety distance, see "Calculating the Safety Distance (Minimum Distance)" on page 19) must take into account


© Banner Engineering Corp. All rights reserved.
www.bannerengineering.com

the slower of the two channels. Refer to "Generic Receiver Wiring to FSDs (manual reset)" on page 48 or consult the machine manufacturer for additional information.

To ensure that an accumulation of failures does not compromise the redundant control scheme (cause a failure to danger), a method to verify the normal functioning of MPCEs or other control devices is required. EZ-SCREEN LPM provides a convenient method for this verification: external device monitoring (EDM).

For the EZ-SCREEN LPM external device monitoring to function properly, each device must include a normally closed, forced-guided (mechanically linked) contact that can accurately reflect the status of the device. This ensures that the normally open contacts, used for controlling hazardous motion, have a positive relationship with the normally closed monitoring contacts and can detect a failure to danger (for example, contacts that are welded closed or stuck On).

It is strongly recommended that a normally closed, forced-guided monitoring contact of each FSD and MPCE be connected in series with the EDM input (see "Generic Receiver Wiring to FSDs (manual reset)" on page 48). If this is done, proper operation will be verified. Monitoring FSD and MPCE contacts is one method of maintaining control reliability (OSHA/ANSI) and Category 3 and 4 (ISO 13849-1).

If monitoring contacts are not available or do not meet the design requirement of being forced-guided (mechanically linked), it is recommended you:

- Replace the devices so that they are capable of being monitored; or
- Incorporate the EDM function into the circuit as close to the MPCE as possible (for example, monitor the FSDs); and
- Employ the use of well-tried, tested, and robust components, and generally accepted safety principles, including fault exclusion, into the design and installation to either eliminate, or reduce to an acceptable (minimal) level of risk, the possibility of undetected faults or failures that can result in the loss of the safety function.

The principle of fault exclusion allows the designer to design out the possibility of various failures and justify it through the risk assessment process to meet the required level of safety performance, such as the requirements of Category 2, 3, or 4. See ISO 13849-1/-2 for further information.

**WARNING:**

- **External Device Monitoring (EDM)**
- Creating a hazardous situation could result in serious injury or death.
- If the system is configured for “no monitoring,” it is the user’s responsibility to ensure this does not create a hazardous situation.

## 5.4.4 External Device Monitoring

EZ-SCREEN LPM provides two possible EDM configurations: 1-channel monitoring and no monitoring. Their functions are described below. The most common form of EDM is 1-channel monitoring. The installation must prevent short circuits across the N.C. monitoring contacts and to secondary sources of power.

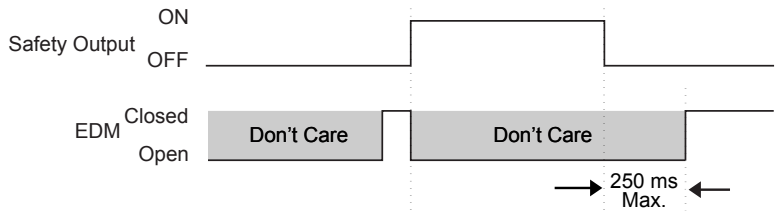


### External Device Monitoring Wiring

If not connected previously, it is again strongly recommended that one normally closed, forced-guided monitoring contact of each FSD and MPCE be wired as shown in the monitoring circuit (see "Generic Receiver Wiring to FSDs (manual reset)" on page 48 ). Pin 9 of the receiver connector provides a connection for the external device monitoring input.

**One-Channel Monitoring:** This is a series connection of closed monitor contacts that are forced-guided (mechanically linked) from each device controlled by the EZ-SCREEN LPM. The monitor contacts must be closed before the EZ-SCREEN LPM can be reset and the OSSDs can turn ON. After a reset is executed and the safety outputs (OSSDs) turn ON, the status of the monitor contacts are no longer monitored and may change state. However, the monitor contacts must be closed within 250 milliseconds of the OSSD outputs going from ON to OFF.


© Banner Engineering Corp. All rights reserved.
www.bannerengineering.com

Refer to "Generic Receiver Wiring to FSDs (manual reset)" on page 48 for wiring. Connect the monitor contacts between +24 V DC and EDM (orange wire, pin 9).

**No Monitoring:** Use this configuration to perform the initial checkout; see "Initial Checkout Procedure" on page 36. *If the application does not require the EDM function, it is the user's responsibility to ensure that this configuration does not create a hazardous situation.* To configure the System for No Monitoring, connect or jumper EDM (orange wire, pin 9) directly to +24 V DC.

### 5.4.5 Emitter Remote Test Input

An emitter connection is provided (Test) for the connection of an external remote test switch (typically a normally open contact held closed). Opening this switch “turns OFF” the emitter, simulating an interruption of the light beams; all OSSD outputs will turn OFF. This input is used in conjunction with the emitter Test/Reset DIP switch. See "Specifications" on page 14, "System Configuration Settings" on page 66, and "Generic Emitter Wiring Diagram" on page 47.

### 5.4.6 Auxiliary (OSSD Follow/Fault) Output

EZ-SCREEN LPM receivers have an auxiliary status output that provides a PNP current-sourcing output (250 mA maximum) that mirrors the state of the OSSDs or indicates a lockout (ON = Fault). The output is on pin 8 (red wire).

**The emitter also has a Fault output** that can be enabled to indicate the emitter lockout status (see "System Configuration Settings" on page 66).

## 5.5 Reference Wiring Diagrams

Other interfacing modules and solutions are available, see "Accessories" on page 83 and www.bannerengineering.com.

**NOTE:** For interfacing modules or remotely located safety I/O blocks where pin 5 of a 5-pin M12 QD is not earth ground, a 4-pin cordset where pin 5 is not physically present or is not electrically connected can be used (such as MQDEC-406SS double-ended cordset). In such situations, earth ground must be provided via the mounting brackets.

### 5.5.1 Generic Emitter Wiring Diagram

*Figure 28. Emitter—Generic wiring*

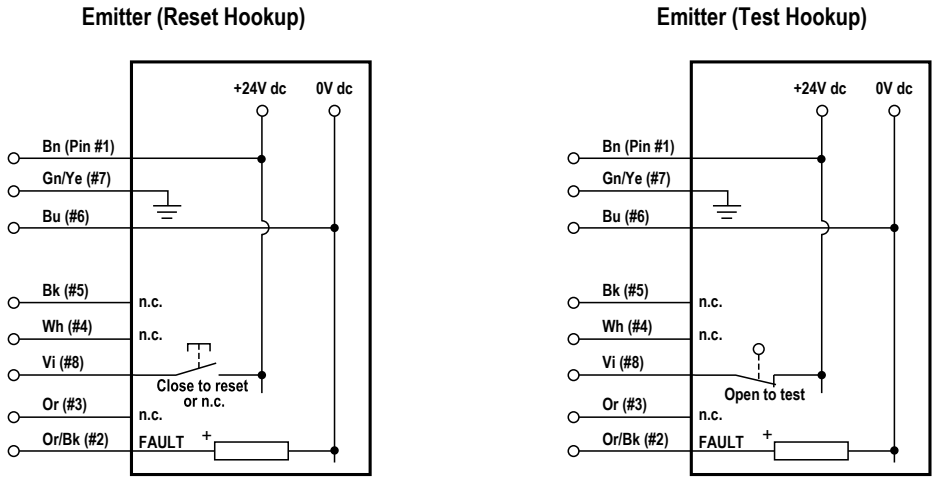


**NOTE:** Color code reflects RDLP-8..D and QDE-8..D cordsets and pin out. See "Cordsets" on page 83 for further cordset information.


© Banner Engineering Corp. All rights reserved.
www.bannerengineering.com

## 5.5.2 Generic Receiver Wiring to FSDs (manual reset)

*Figure 29. Generic wiring - FSDs (1-CH EDM, manual reset, Override)*

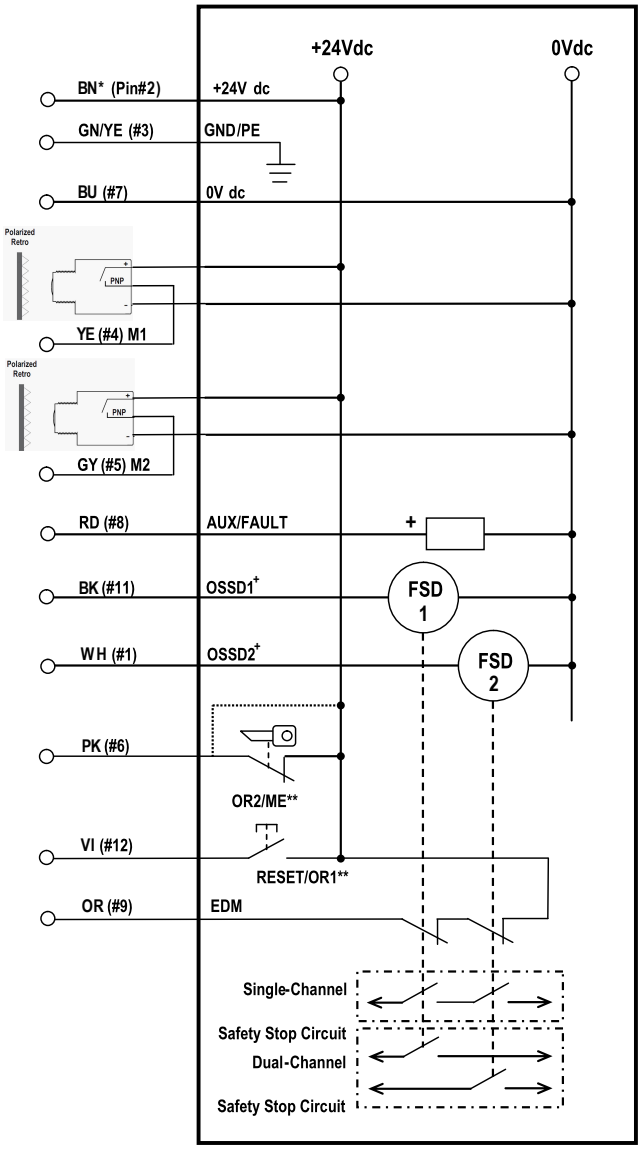


**NOTE:** *Color code reflects RDLP-11..E and DELPE-12..E cordsets and pin out. Pin #10 on M12 QD not used. See "Cordsets" on page 83 for further cordset information.
** For Trip (auto reset) operation VI (#12) is not connected. If override (bypass) is not used PK (#6) must be connected to +24 V DC.

+ Do not exceed OSSD maximum load capacitance specification. See "Specifications" on page 14.


© Banner Engineering Corp. All rights reserved.
www.bannerengineering.com

## 5.5.3 Generic Receiver Wiring to an Interface Module

*Figure 30. Generic wiring - Interface Module (1-CH EDM, manual reset, Override)*

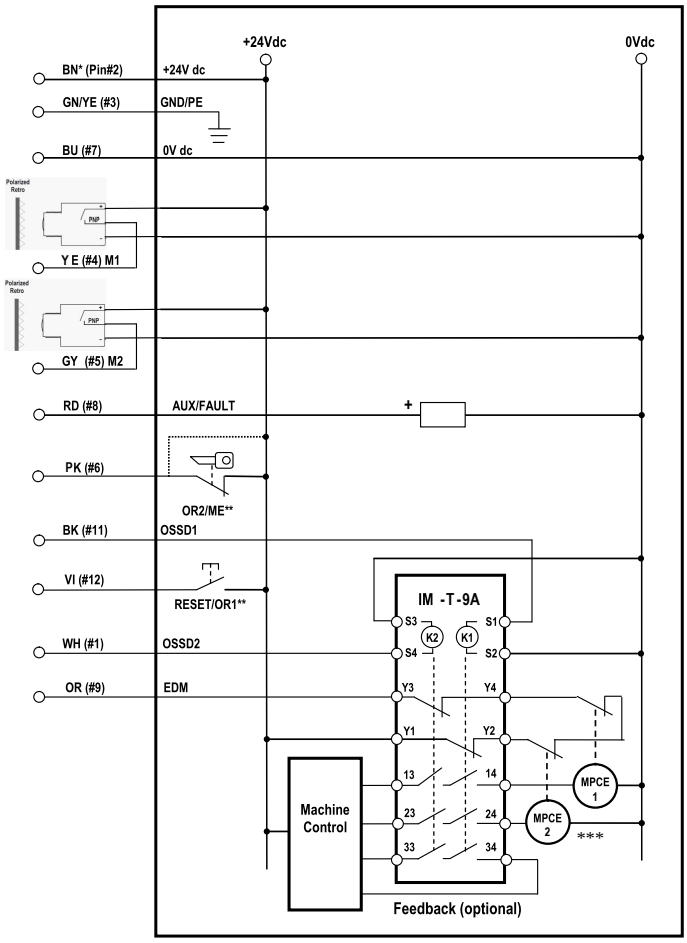


**NOTE:** * Color code reflects RDLP-11..E and DELPE-12..E cordsets and pin out. Pin #10 on M12 QD not used. See "Cordsets" on page 83 for further cordset information.
** For Trip (auto reset) operation VI (#12) is not connected. If override (bypass) is not used PK (#6) must be connected to +24 V DC.

*** Installation of transient (arc) suppressor across the coils of MPCE1 and MPCE2 is recommended (see Warning).

**WARNING:**

- **Properly install arc or transient suppressors**
- Failure to follow these instructions could result in serious injury or death.
- Install any suppressors as shown across the coils of the machine primary control elements. Do not install suppressors directly across the output contacts of the safety or interface module. In such a configuration, it is possible for suppressors to fail as a short circuit.


© Banner Engineering Corp. All rights reserved.
www.bannerengineering.com

## 5.5.4 Generic Receiver Wiring to a Self-Checking Safety Module, Safety Controller, Safety PLC

*Figure 31. Generic wiring to a self-checking safety module, Safety Controller, safety PLC (no EDM, auto rest, no Override)*

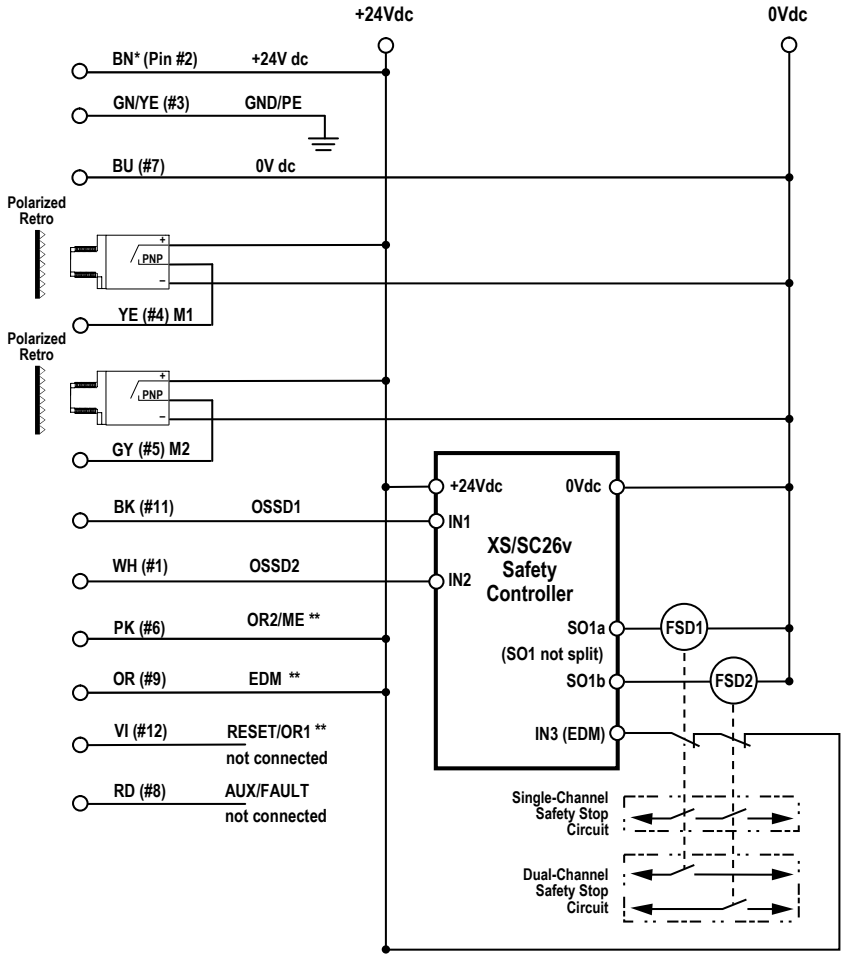


**NOTE:** * Color code reflects RDLP-11..E and DELPE-12..E cordsets and pin out. Pin #10 on M12 QD not used. See "Cordsets" on page 83 for further cordset information.
** For Trip (auto reset) operation VI (#12) is not connected. No EDM monitoring and no Override (bypass), OR (#9) and PK (#6) must be connected to +24 V DC.


© Banner Engineering Corp. All rights reserved.
www.bannerengineering.com

Chapter Contents

6.1 Commissioning Checkout ..... 51
6.2 Muting Checkout ..... 52

# Chapter 6 Preparing for System Operation

After the initial trip test has been accomplished, and the output signal switching device (OSSD) safety outputs and external device monitoring (EDM) connections have been made to the machine to be controlled, the EZ-SCREEN LPM is ready for testing in combination with the guarded machine.

The operation of the EZ-SCREEN LPM with the guarded machine must be verified before the combined System and machine may be put into service. To do this, a Qualified Person must perform the Commissioning Checkout Procedure (see "Commissioning Checkout" on page 51).

## 6.1 Commissioning Checkout

Perform this checkout procedure as part of the System installation after the System has been interfaced to the guarded machine, or whenever changes are made to the System (either a new configuration of the EZ-SCREEN LPM or changes to the machine). A Qualified Person must perform the procedure. Checkout results should be recorded and kept on or near the guarded machine as required by applicable standards.

**WARNING:**

- **Do not use the system until the checkouts are verified**
- Attempts to use the guarded/controlled machine before these checks are verified could result in serious injury or death.
- If all these checks cannot be verified, do not attempt to use the safety system that includes the Banner Engineering Corp. device and the guarded/controlled machine until the defect or problem has been corrected.

Follow these steps to prepare the System for this checkout.

1. Examine the guarded machine to verify that it is of a type and design compatible with the EZ-SCREEN LPM System. See "Appropriate Applications and Limitations" on page 9 for a list of appropriate and inappropriate applications.
2. Verify that the EZ-SCREEN LPM is configured for the intended application.
3. Verify that the safety distance (minimum distance) from the closest danger point of the guarded machine to the defined area is not less than the calculated distance, per "Calculating the Safety Distance (Minimum Distance)" on page 19.
4. Verify that:
    a. Access to any dangerous parts of the guarded machine is not possible from any direction not protected by the EZ-SCREEN LPM System, hard (fixed) guarding, or supplemental safeguarding, and
    b. It is not possible for a person to stand between the defined area and the dangerous parts of the machine, or
    c. Supplemental safeguarding and hard (fixed) guarding, as described by the appropriate safety standards, are in place and functioning properly in any space (between the defined area and any hazard) that is large enough to allow a person to stand undetected by the EZ-SCREEN LPM.
5. If used, verify that all reset switches are mounted outside and in full view of the guarded area, out of reach of anyone inside the guarded area, and that means of preventing accidental use is in place.
6. Examine the electrical wiring connections between the EZ-SCREEN LPM OSSD outputs and the guarded machine's control elements to verify that the wiring meets the requirements stated in "Electrical Connections to the Guarded Machine" on page 43.
7. Inspect the area near the defined area (including work pieces and the guarded machine) for reflective surfaces (see "Adjacent Reflective Surfaces" on page 25). Remove the reflective surfaces if possible by relocating them, painting, masking or roughening them. Remaining problem reflections will become apparent during the Trip Test.
8. Verify that power to the guarded machine is Off. Remove all obstructions from the defined area. Apply power to the EZ-SCREEN LPM System.
9. Observe the Status indicators and Diagnostic Display:


© Banner Engineering Corp. All rights reserved.
www.bannerengineering.com

- **Lockout:** Status flashing red; all others Off
- **Blocked:** Status On red; one or more Zone indicators On red; Reset On amber
- **Clear:** Status On green[7]; all Zone indicators On green[8]; Reset On amber
- **Latch:** (defined area clear) Status On red; all Zone indicators On green; Reset double-flashing amber

Perform a manual reset as described in "Reset Procedures" on page 78.

10. A Blocked condition indicates that one or more of the beams is misaligned or interrupted. To correct this situation, see "Optical Alignment of the EZ-SCREEN LP with Muting Models" on page 37. If the System is in a Latch condition, perform a manual reset.
11. After the green and amber Status indicators are On, **perform the trip test** ("Perform a Trip Test" on page 42) on each sensing field to verify proper System operation and to detect possible optical short circuits or reflection problems. **Do not continue until the EZ-SCREEN LPM passes the trip test.**

**IMPORTANT: Do not expose any individual to any hazard during the following checks.**



**WARNING:**
- **Clear the guarded area before applying power or resetting the system**
- Failure to clear the guarded area before applying power could result in serious injury or death.
- Verify that the guarded area is clear of personnel and any unwanted materials before applying power to the guarded machine or before resetting the system.

12. Apply power to the guarded machine and verify that the machine does not start up.
13. Interrupt (block) the defined area with the supplied test piece and verify that it is not possible for the guarded machine to be put into motion while the beam(s) is blocked.
14. Initiate machine motion of the guarded machine and, while it is moving, use the supplied test piece to block the defined area. Do not attempt to insert the test piece into the dangerous parts of the machine. Upon blocking any beam, the dangerous parts of the machine must come to a stop with no apparent delay.
15. Remove the test piece from the beam; verify that the machine does not automatically restart, and that the initiation devices must be engaged to restart the machine.
16. Remove electrical power to the EZ-SCREEN LPM. Both OSSD outputs should immediately turn Off, and the machine must not be capable of starting until power is re-applied to the EZ-SCREEN LPM.
17. Test the machine stopping response time, using an instrument designed for that purpose, to verify that it is the same or less than the overall system response time specified by the machine manufacturer. **Do not continue operation until the entire checkout procedure is complete and all problems are corrected.**

## 6.2 Muting Checkout

1. Verify that the system has been reset and the Green Status indicator is On. If the Yellow Reset indicator is flashing (indicating the system is waiting for a reset of a latched condition), perform a manual reset. At any time, if the Status indicator begins to flash Red, a lockout condition exists. Refer to Section 6 to determine the cause of the lockout.

   **During this procedure, at all times ensure that personnel are not exposed to any hazard.**
2. Block or activate each mute device individually and verify that the correct Mute Device indicator on the receiver is On Yellow. If not, check the mute devices and their wiring.
3. Mute the system by blocking (or activating) both mute devices (typically M1−M2) simultaneously (within 3 seconds).
4. Verify that the external Mute Lamp comes On. If not, check the indicator and its wiring. Verify that the ME/OR2 input is closed ( if configured for Mute Enable), and check the Diagnostic Display for error codes.
5. Interrupt (block) the defined area of the EZ-SCREEN LPM; verify the Status indicator is On Green.
6. Clear the defined area (before the Mute Timer expires) and verify the Status indicator remains On Green. Clear (deactivate) the mute devices before the Mute Timer expires (see "Mute Time Limit (Backdoor Timer)" on page 61) and verify the external Mute Lamp goes Off. The Status indicator should remain On Green.
7. Verify that it is not possible for a single individual to initiate a mute condition by triggering the mute devices (for example, by blocking both photoelectric beams or actuating both switches) and access the hazard without being

[7] The status indicator flashes green if reduced resolution is enabled.
[8] The Zone indicators flash green if fixed blanking is enabled.


© Banner Engineering Corp. All rights reserved.
www.bannerengineering.com

detected and issuing a stop command to the machine. Do not expose any individual to hazard while attempting to mute the system.

8. Verify that it is not possible for personnel to pass in front of, behind, or next to the muted object without being detected and without issuing a stop command to the machine.
9. When used, verify optional functions. Do not expose any individual to hazard while attempting to mute, bypass, or override the system.

**One-way (directional) muting using the Mute Enable function** (configuration options #1 or #2)

1. With the ME/OR2 input open (N.C. switch held open) or at 0 Vdc, verify that the system can not be muted by blocking (or activating) the mute devices within 3 seconds of each other. Do not expose any individual to hazard while attempting to mute the system.

**"Exit-only" application** (configuration options #7 and #8)

1. Verify the minimum carrier length requirement for this mute configuration. See "Entry/Exit Applications" on page 55.
2. From the non-hazardous side (Safe Area) of the EZ-SCREEN LPM, verify that the system cannot be muted and that the light screen OSSDs turn Off and remain Off when the defined area is blocked.

**Mute-Dependent Override** (configuration options #5, #6, or #7)

1. Clear all mute sensors and the light screen; verify that the OSSDs are On.
2. Block (interrupt) the defined area of the light screen.
3. Verify that the OSSDs turn Off.
4. Block (activate) one or both of the mute sensors. The external mute lamp should be flashing.
5. With the light screen defined area and one mute sensor blocked, start the override by closing the RESET/OR1 input and opening the OR2/ME input (within 3 seconds of each other).
6. Verify that the OSSDs turn On, and that the mute lamp, if used, is on steady.
7. Verify the OSSDs turn Off after 60 seconds when the Override timer expires.
8. Clear the light screen and all mute sensors.
9. Verify that the OSSDs turn On.
10. Open the RESET/OR1 input and close the OR2/ME input.
11. Verify that the OSSDs remain On.

**Bypass Function** (configuration options #3, #4 or #8)

1. Clear all mute sensors and the light screen; verify that the OSSDs are On.
2. Block (interrupt) the defined area of the light screen.
3. Verify that the OSSDs turn Off.
4. With the defined area blocked, start the bypass by closing the RESET/OR1 input and opening the OR2/ME input (within 3 seconds of each other).
5. Verify that the OSSDs turn On, and that the mute lamp, if used, is on steady.
6. Verify the OSSDs turn Off after 5 minutes when the Bypass timer expires.
7. Clear the light screen.
8. Verify that the OSSDs turn On.
9. Open the RESET/OR1 input and close the OR2/ME input.
10. Verify that the OSSDs remain On.

**WARNING:**

- **Do not use the system until the checkouts are verified**
- Attempts to use the guarded/controlled machine before these checks are verified could result in serious injury or death.
- If all these checks cannot be verified, do not attempt to use the safety system that includes the Banner Engineering Corp. device and the guarded/controlled machine until the defect or problem has been corrected.


© Banner Engineering Corp. All rights reserved.
www.bannerengineering.com

Chapter Contents

7.1 Typical Muting Applications ..... 55
7.2 Mute Devices ..... 61
7.3 Mute Time Limit (Backdoor Timer) ..... 61
7.4 General Muting Device Requirements ..... 61
7.5 Examples of Muting Sensors and Switches ..... 62
7.6 Mute Enable (ME) ..... 63
7.7 Muting Timing Sequences ..... 63
7.8 Mute Lamp Output ..... 64

# Chapter 7 Muting Functions

To mute the primary safeguard appropriately, the design of a muting system must:

1. Identify the non-hazardous portion of the machine cycle.
2. Select the proper muting devices.
3. Include proper mounting and installation of those devices.

The EZ-SCREEN LPM can monitor and respond to redundant signals that initiate the mute. The mute then suspends the safeguarding function. This allows a person to interrupt the defined area to load and/or unload parts or an object to pass through the defined area of a safety light screen, without generating a stop command. (This should not be confused with blanking, which disables one or more beams in a safety light screen, resulting in a larger resolution.) See "Muting Timing Sequences" on page 63 for example mute timing sequences.

The mute may be triggered by a variety of external devices. This feature provides a variety of options to tailor the System to the requirements of a specific application. A pair of muting devices must be triggered within 3 seconds of each other but order does not matter. This reduces the chance of common mode failures or defeat.

*Table 6. Mute Configuration Options*

| Option | Mute Time (Backdoor Timer) | Bypass/Override Function | Override Timeout | Mute Enable Function | Mute Delay Time |
|---|---|---|---|---|---|
| 1 | Infinite | No | N/A | Yes | N/A |
| 2 | 60 seconds | No | N/A | Yes | N/A |
| 3 | Infinite | Bypass | 5 minutes | No | N/A |
| 4 | 60 seconds | Bypass | 5 minutes | No | N/A |
| 5 | Infinite | Mute-Dependent Override | 60 seconds | No | N/A |
| 6[9] | 60 seconds | Mute-Dependent Override | 60 seconds | No | N/A |
| 7 | 60 seconds | Mute-Dependent Override | 60 seconds | No | 4 seconds |
| 8 | Infinite | Bypass | 5 minutes | No | 4 seconds |

**NOTE:** See "Mute Configuration" on page 39 for configuration procedure.

**NOTE:** Options 7 and 8 are intended for "Exit Only" applications and provides a 4-second mute off-delay time. Once both mute devices are actuated within 3 seconds of each other, and the receiver is blocked, the receiver OSSDs will remain ON for 4 seconds after the first mute device (M1 or M2) is cleared, or until the receiver-defined area is clear, whichever comes first.

**WARNING:**
- **Muting is allowed only during the non-hazardous portion of the machine cycle**
- Failure to follow these instructions could result in serious injury or death.
- Design the muting application so that no single component failure can prevent the stop command or allow subsequent machine cycles until the failure is corrected (per ISO 13849-1 and ANSI B11.19).

[9] Factory default configuration


© Banner Engineering Corp. All rights reserved.
www.bannerengineering.com

**WARNING:**

- **Muting inputs must be redundant**
- A single device, with multiple outputs, can fail so that the system is muted at an inappropriate time, causing a hazardous situation.
- Do not use a single switch, device, or relay with two normally open contacts for the mute inputs.

# 7.1 Typical Muting Applications

## 7.1.1 Entry/Exit Applications

The muting devices must be placed to ensure that the points that trigger the mute's start and end are very close to the safety light screen's sensing field. This prevents personnel from following, or being pushed by, the object into the hazardous area without interrupting the safety light screen before the mute window opens or at the time the mute window closes.

When two pairs of opposed-mode photoelectrics are used as muting devices, as shown below, the crossing point of the two sensing paths must be on the hazardous side of the safety light screen. The safety light screen will be interrupted before any personnel would be able to block both beams and mute the system. The devices should detect the material and not the pallet or the transport in order to hinder an individual from riding into the hazardous area.

*Figure 32. X-Pattern Entry/Exit system using two pairs of opposed-mode photoelectric muting devices*

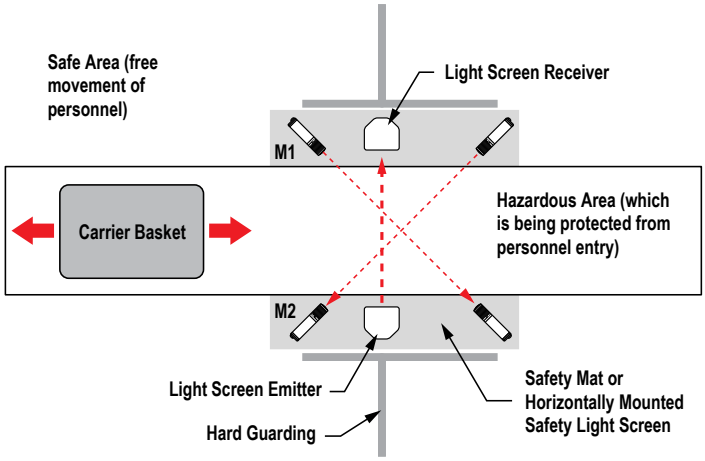


*Figure 33. Horizontal photoelectric muting devices placed at different heights*

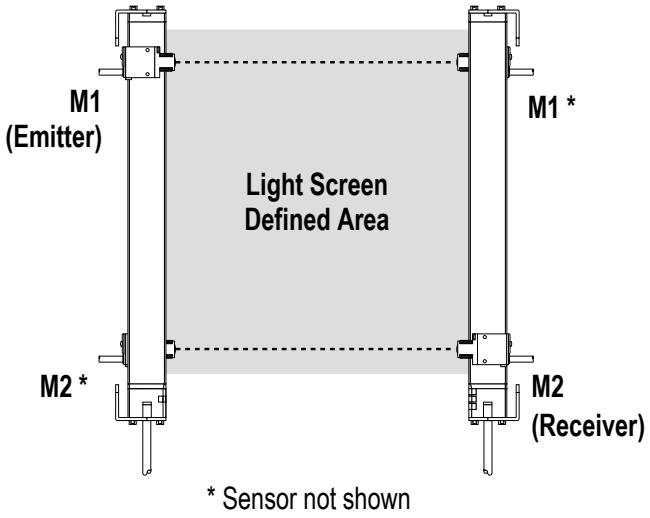



© Banner Engineering Corp. All rights reserved.
www.bannerengineering.com

*Figure 34. Photoelectric muting devices placed diagonally*

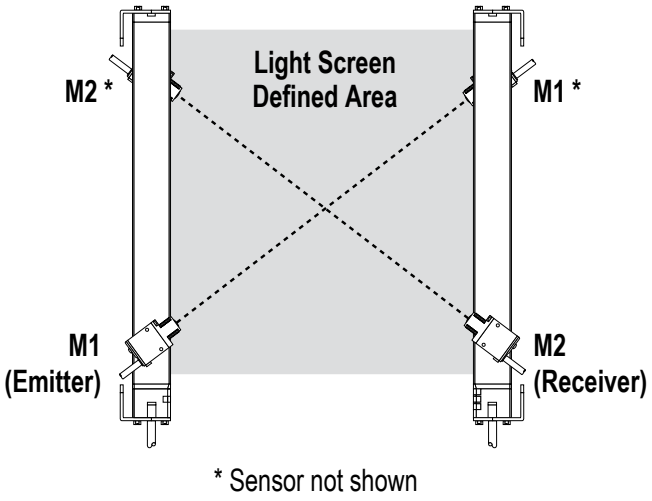


**WARNING:**

- **Verify That Unintentional Muting is Not Possible**
- Failure to follow these instructions could result in serious injury or death.
- Position the crossing point of the photoelectric beams in the hazardous area so that it is not accessible by personnel. An individual must not be able to block both photoelectric beams and initiate a mute condition.

*Figure 35. Entry/Exit Application using four pairs of opposed-mode photoelectric sensors for mute devices*

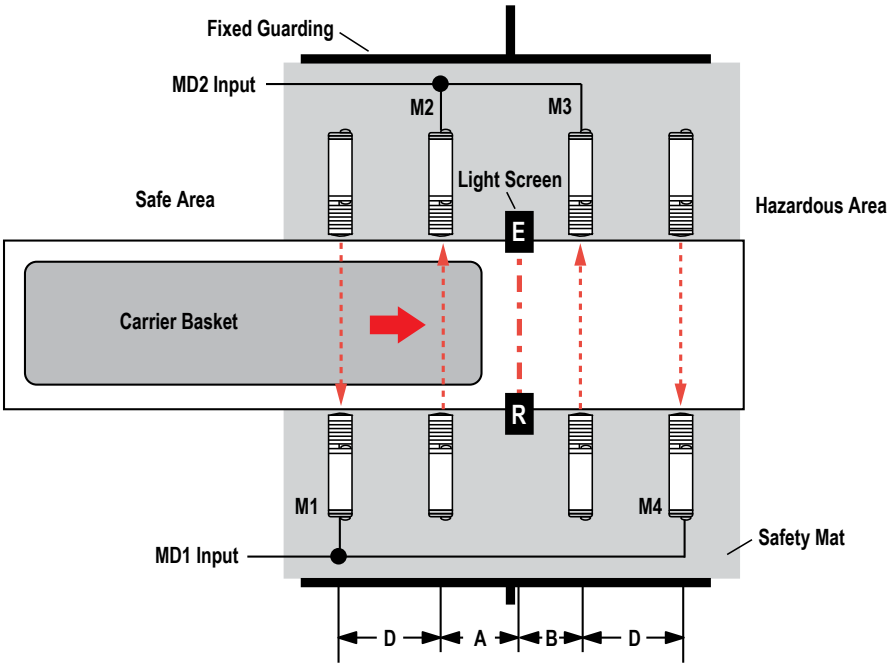


```
A ≥ Line speed (ft/sec) x 0.1 sec.


B ≥ Line speed (ft/sec) × 0.5 sec.  if receiver Sync Beam (Beam 1) is blocked
B ≥ Line speed (ft/sec) × 0.1 sec.  if receiver Non-sync Beam is blocked
```


© Banner Engineering Corp. All rights reserved.
www.bannerengineering.com

```
Length of carrier basket > A + B + (D x 2)
(NOTE: M4 must be blocked before M1 clears.)

D < Line speed (ft/sec) × 3.0 sec., but beams M1 and M2 must be far enough apart to prevent an
individual
from triggering both sensors simultaneously.
```

**CAUTION: Four Mute Device Applications** When four mute devices are used, a maximum mute time limit should be configured. Mute options 2, 4, or 6 should be used with a maximum mute time of 60 seconds.

**CAUTION:** The Mute Enable function should be used to enforce one-way muting when four muting devices are used.

**WARNING:**

- It must not be possible for personnel to walk in front of, behind, or next to the muted object without being detected and stopping the hazardous motion.
- Failure to follow these instructions could result in serious injury or death.
- Use supplemental guarding to prevent personnel from entering the hazardous area during a mute condition.

*Figure 36. Exit Application with 1-Way Muting using two opposed-mode sensors (Configurations #7 and #8)*

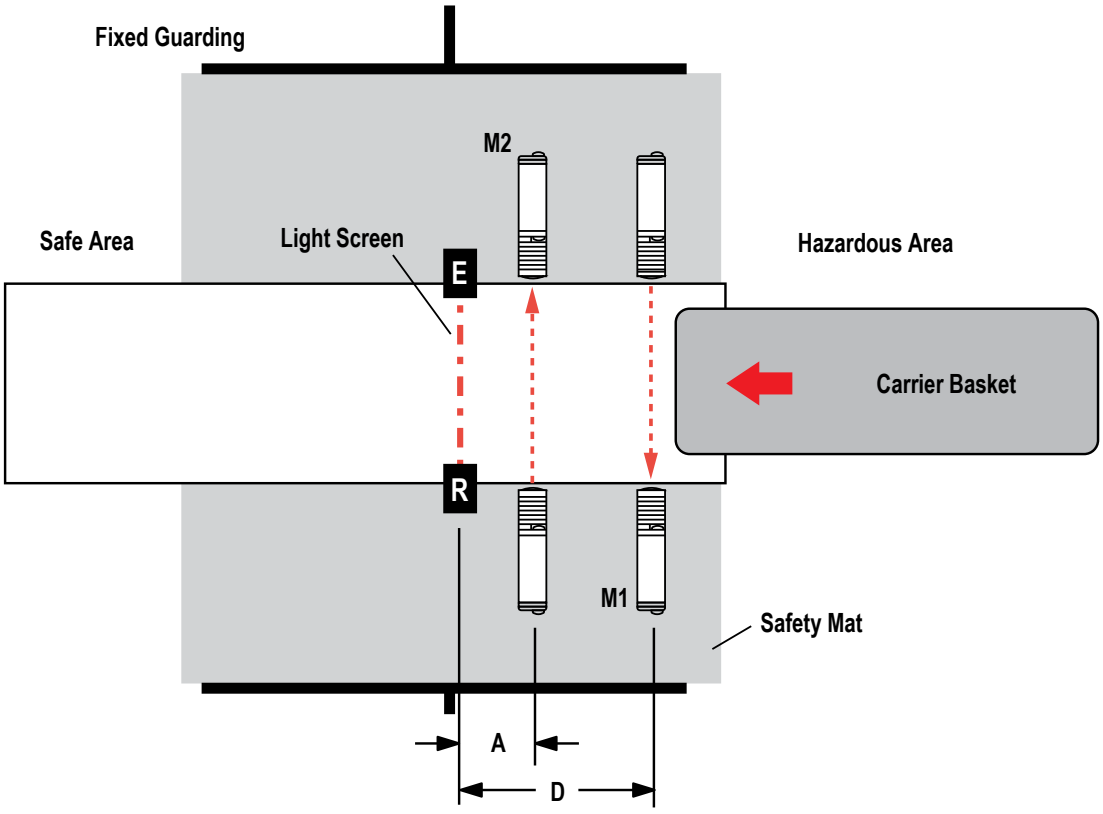


```
A ≥ Line speed (ft/sec) × 0.1 sec.

D < Line speed (ft/sec) × 4.0 sec.
```


© Banner Engineering Corp. All rights reserved.
www.bannerengineering.com

```
Length of carrier basket > D
```

**NOTE:** Light screen must be blocked before M1 clears.

## 7.1.2 Home or Station Applications

The muting devices must be placed to ensure that the safety light screen is muted only when the hazard does not exist or is in another area so that personnel are not exposed. The muting devices must be placed so that if a hazard arises, or the hazard enters the safeguarded area, the mute will immediately end and the safeguard will be active once again.

In home position muting applications, the light screen is active only while motion is taking place or a hazard is present, such as the closing of an automated door. In this example, the door is interlocked and the machine can not start until the opening is completely closed. The hazard being guarded by the light screen is the pinch point caused by the door closing.

M3 and M4 could be two SI-QS75MC safety switches, each with a single safety contact used for the muting input. M1 and M2 could be SI-QS90MF safety switches, each with two safety contacts (one for muting and one for interlocking) and one monitoring contact for a logic input.

If the light screen is also guarding hazards within the enclosure when the door is open or preventing cycle initiation, then switches M3 and M4 would not be used. The door could also be locked by using locking style safety switches, such as the SI-LS42 as M1 and M2.

*Figure 37. A home position (door) muting application, using 4 safety switches as muting devices*

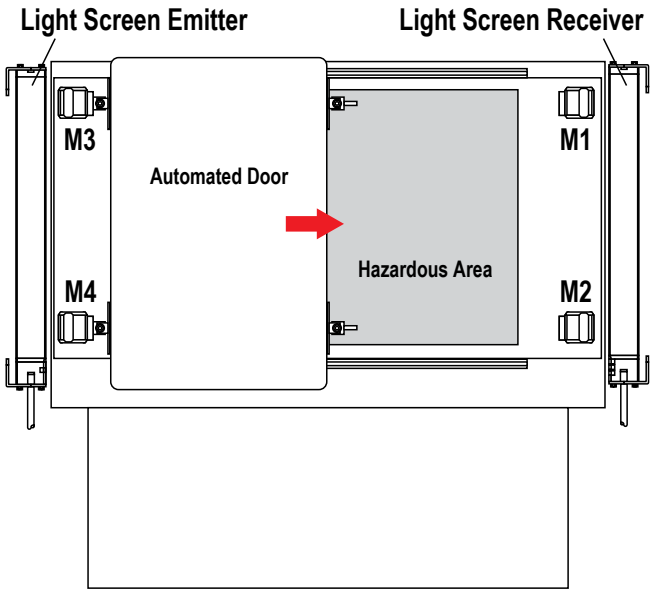


**WARNING: User is Responsible for Safe Application of this Device**
The muting application examples described in this manual depict generalized guarding situations. Every guarding application has a unique set of requirements.

Make sure that all legal requirements are met and that all installation instructions are followed. Direct any questions regarding safeguarding to Banner Engineering.

## 7.1.3 Robot Load/Unload Station Application

This station muting application uses two independent safety light screen circuits, each with its own muting circuit and muting devices (for example, polarized-retroreflective photoelectrics). The application also includes run bars with two-hand control, auxiliary controls, and E-Stop. The two-hand control is provided at each station to safeguard the operator during the momentary clamping action of the fixture while the safety light screen is muted.


© Banner Engineering Corp. All rights reserved.
www.bannerengineering.com

In this example, the safety light screens are angled outwards (see "Figure: A robot load/unload application with two-station home-position muting, using polarized retroreflective photoelectrics as muting devices" on page 59, detail A). This provides proper separation distance from the hazards created by the robot and the clamping/welding fixtures, while protecting against the possibility of pass-through hazards. In muting applications involving an operator, the operator must be continually detectable by the defined area. This ensures that if a hazard arises, causing the mute to end while the operator is present, the safety light screen will immediately issue a stop.

While the robot is at station A, the light screen at station B is muted (M1B and M2B are active), allowing the operator to load or unload without issuing a stop command to the robot. As the robot moves out of the A work envelope (as defined by Station B mute devices, see detail B) the mute discontinues at station B. If the operator is still within the protected area, a stop command is immediately issued. As the robot moves to the work envelope of station B, the mute devices M1A and M2A activate and mute the safety light screen at station A.

*Figure 38. A robot load/unload application with two-station home-position muting, using polarized retroreflective photoelectrics as muting devices*

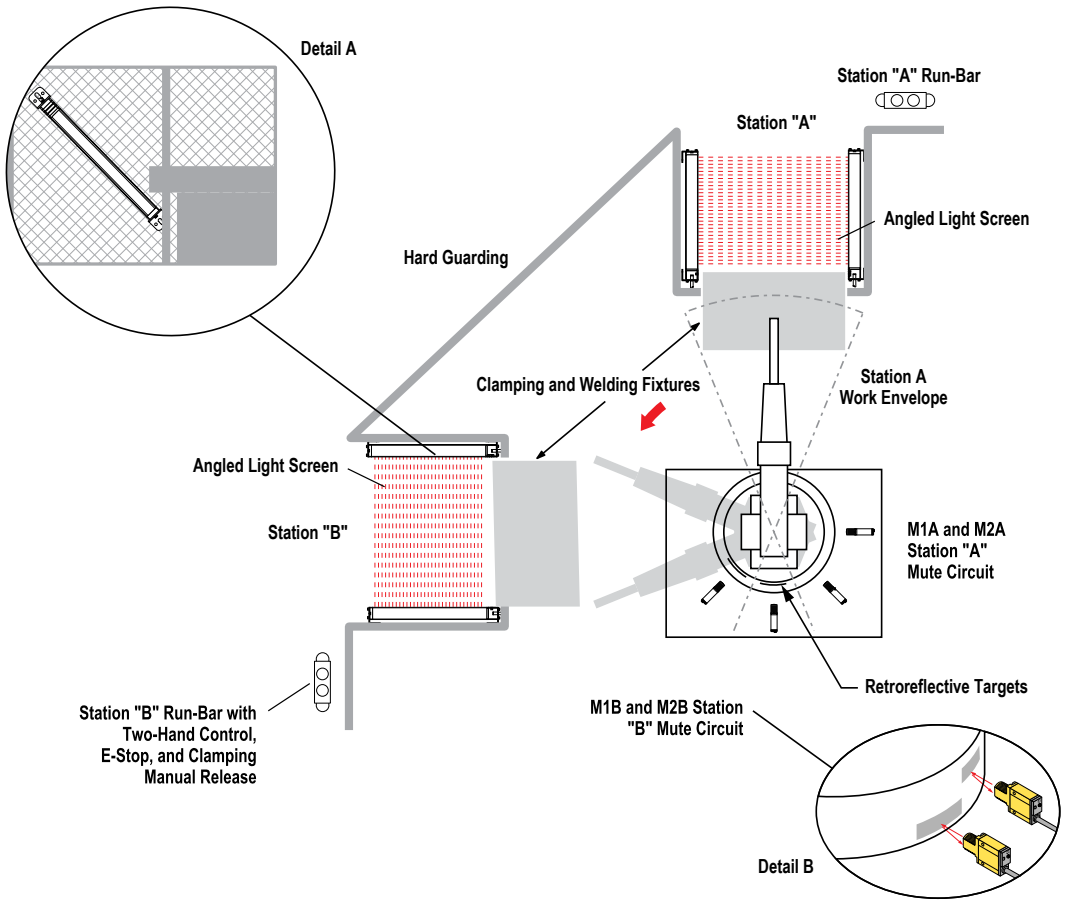


## 7.1.4 Turret Table Application

Turret Table application is similar to the Robot Load/Unload Station muting application, except that any movement of the table ends the mute. To accomplish this, small retroreflective targets (or tape) are positioned so that they will initiate the mute (the sensors must be set to Light Operate) only after the table has finished indexing.

**NOTE:** The example shows four pairs of targets, one pair for each position.

When the table begins indexing again, the polarized retroreflective photoelectrics immediately lose sight of the targets and end the mute. Since the rotation of the table is the hazard, the size and positioning of the targets must prevent muting while motion is taking place.

The top of the emitter and receiver are angled outwards to maintain proper separation distance while preventing a pass-through hazard. Hard guarding, or other safeguarding, must be positioned to prevent personnel from reaching through and accessing any hazard.


© Banner Engineering Corp. All rights reserved.
www.bannerengineering.com

*Figure 39. A typical application for turret table inspection or operation station muting, using retroreflective photoelectric sensors as muting devices*

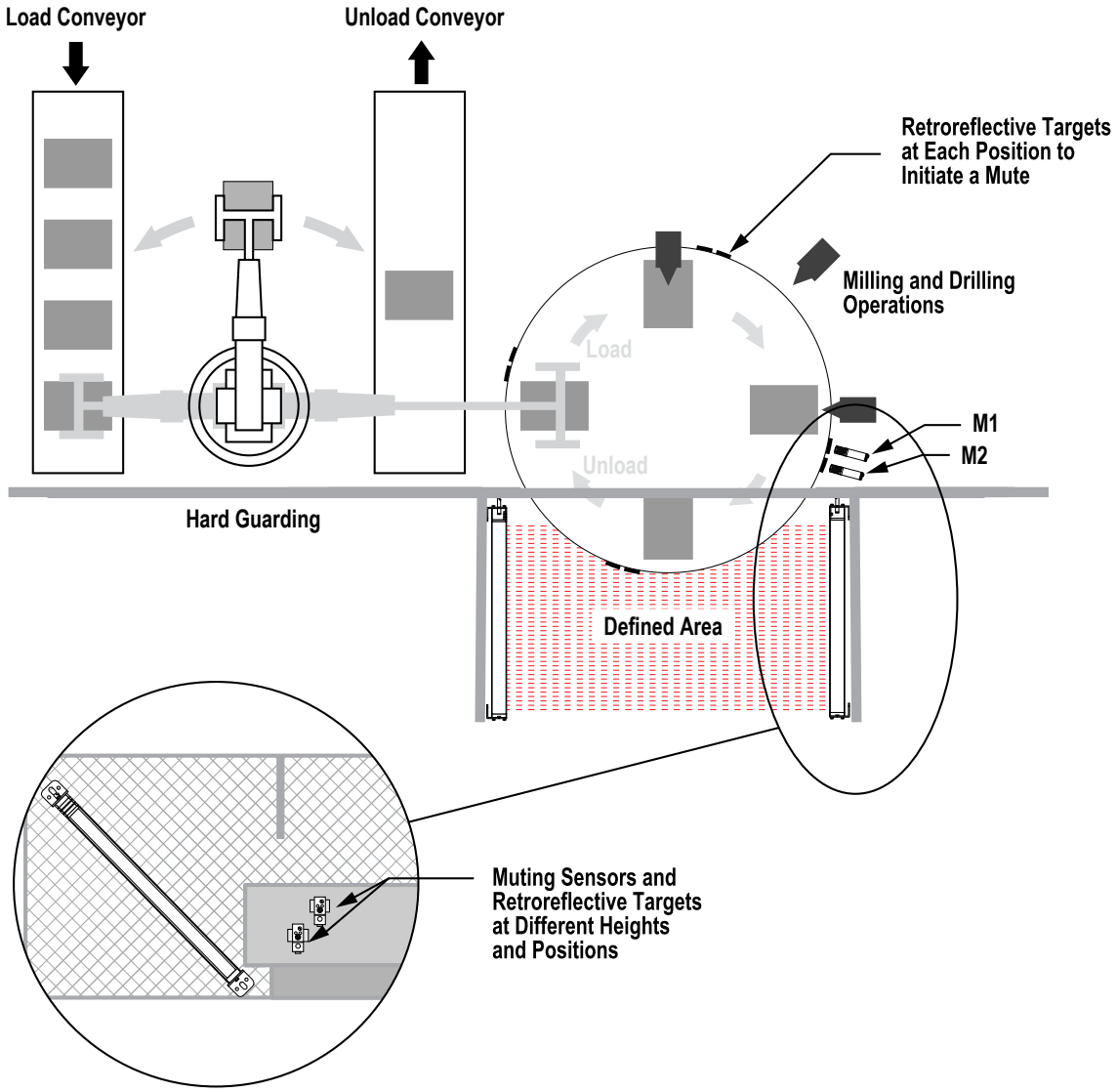


## 7.1.5 Power Press Applications

Muting is allowed on power presses only during the nonhazardous portion of the cycle (for example, the upstroke), per OSHA1910.217, ANSI B11.1, B11.2, and B11.3. The mute permits the insertion or removal of material into the press that would otherwise block the sensing field of the safety light screen, causing the press to stop. Muting should not be confused with Inch or Jog modes, whose manual selection may bypass the safety light screen within the machine control.

For the proper application of muting on a power press, at a minimum, two (or four) independent position switches (such as cam-operated limit switches, inductive prox sensors, or pressure switches) must be used to initiate the mute during the nonhazardous portion of the machine cycle. These position switches would be mute devices M1/M2 (and M3/M4 if used). Typically, these switches have normally open contacts, which are held (or actuated) closed during the mute cycle.

These switches must be mounted separately to prevent misadjustment, misalignment, or a single common mode failure, which would result in an improper mute cycle or otherwise unsafe condition. They must be installed so that they can not be easily defeated or bypassed, and their adjustment should be under supervisory control.

The two (or four) muting devices must be properly adjusted (or positioned) so that they close only after the hazard no longer exists and then open when the cycle is complete (top of stroke) or when the hazard is again present. If improperly adjusted or positioned, injury or death could result.


© Banner Engineering Corp. All rights reserved.

If the machine has reversing capability where a hazard is possible during a muted condition, the control must include an automatic means through which muting is permitted in the forward (non-hazardous) direction only. A Mute Enable signal from the machine control, motor drive, or other machine logic, is a means to assist in meeting this requirement.

In muting applications involving an operator, all pass-through hazards must be eliminated so that the operator is continually detected when in the defined area. This ensures that if a hazard arises, causing the mute cycle to end while the operator is present, the safety light screen will immediately issue a stop. (See pass-through hazard information below.)

A pass-through hazard is associated with applications that allow personnel to pass through a safeguard, which removes or stops the hazard(s), and then allows the individual to continue into the hazardous area. Subsequently the individual's presence is no longer detected, and the safeguard can not prevent the start or restart of the machine. A pass-through can be created by as little as 75 mm (3 in) space between the defined area and machine frame. If the safety light screen is muted while the individual passes through the defined area, a stop command will not be issued and the hazard cannot be eliminated; the individual must be detected while entering the safeguarded area and the hazardous motion must stop immediately. This is typically accomplished by supplemental safeguarding such as described in ANSI B11 standards or other appropriate standards.

**WARNING: User Responsibility**—The user is responsible for ensuring that all local, state, and national laws, rules, codes, and regulations relating to the use of this device in any particular application are satisfied. Make sure that all legal requirements have been met and that all installation, operation, and maintenance instructions contained in the device documentation are followed.

## 7.2 Mute Devices

The beginning and end of a mute cycle must be triggered by outputs from the muting devices, depending on the application. The mute devices must either have normally open contacts, or have PNP outputs both of which fulfill the muting device requirements (see "General Muting Device Requirements" on page 61). These contacts must close (conduct) when the switch is actuated to initiate the mute, and must open (non-conducting) when the switch is not actuated and in a power-OFF condition.

The EZ-SCREEN LPM monitors the mute devices to verify that their outputs turn ON within 3 seconds of each other (order does not matter). If the inputs do not meet this simultaneity requirement, a mute condition can not occur.

Mute devices should be connected to the same power supply as the receiver. Several types and combinations of mute devices can be used, including, but not limited to: limit switches, photoelectric sensors, positive-driven safety switches, inductive proximity sensors, and "whisker" switches (see "General Muting Device Requirements" on page 61).

## 7.3 Mute Time Limit (Backdoor Timer)

The Mute Time Limit (Backdoor Timer) allows the user to select a maximum period of time that muting is allowed to occur. The Mute Time Limit is either 60 seconds or infinite, depending on the mute configuration option selected (see **Mute Configuration Options** table in "Muting Functions" on page 54). The timer begins when the second muting device makes the simultaneity requirement (within 3 seconds of the first device), and will allow a mute to continue for the predetermined time. After the timer expires, the mute ends – no matter what the signals from the mute devices indicate. A Bypass (mute option 4) or Override (mute options 6 & 7) can be performed to clear the obstruction.

**WARNING:**

- **Mute Time Limit**
- Select an infinite time for the mute time limit (disabling) only if the possibility of an inappropriate or unintended mute cycle is minimized, as determined and allowed by the machine's risk assessment. It is the user's responsibility to ensure that this does not create a hazardous situation.

## 7.4 General Muting Device Requirements

The muting devices (typically sensors or switches) must, at a minimum, comply with the following requirements:

1. There must be a minimum of two independent hard-wired muting devices.


© Banner Engineering Corp. All rights reserved.
www.bannerengineering.com

2. The muting devices must either both have normally open contacts or PNP outputs, both of which must fulfill the input requirements listed in the Specifications. These contacts must close when the switch is actuated, and must open (or not conduct) when the switch is not actuated or in a power OFF condition.
3. The activation of the inputs to the muting function must be from separate sources. These sources must be mounted separately to prevent an unsafe muting condition resulting from misadjustment, misalignment, or a single common mode failure. (For example, physical damage to the mounting surface could cause both muting devices to be knocked out of alignment, resulting in false muting input signals.) Only one of these sources may pass through, or be affected by, a programmable logic controller or similar device.
4. The muting devices must be installed so that they can not be easily defeated or bypassed.
5. The muting devices must be mounted so that their physical position and alignment can not be easily changed.
6. It must not be possible for environmental conditions to initiate a mute condition (for example, extreme airborne contamination).
7. The muting devices must not be set to use any delay or other timing functions (unless such functions are accomplished so that no single component failure prevents the removal of the hazard, subsequent machine cycles are prevented until the failure is corrected, and no hazard is created by extending the muted period).

## 7.5 Examples of Muting Sensors and Switches

**Photoelectric Sensors (Opposed Mode)**

Opposed-mode sensors, which initiate the muted condition when the beam path is blocked, should be configured for dark operate (DO) and have open (non-conducting) output contacts in a power OFF condition. Both the emitter and receiver from each pair should be powered from the same source, to eliminate common mode failures.

**Photoelectric Sensors (Polarized Retroreflective Mode)**

The user must ensure that false proxing (activation due to shiny or reflective surfaces) is not possible. Banner LP sensors with linear polarization can greatly reduce or eliminate this effect.

Use a sensor configured for Light Operate (LO or N.O.) if initiating a mute when the retroreflective target or tape is detected (for example, home position). Use a sensor configured for Dark Operate (DO or N.C.) when a blocked beam path initiates the muted condition (for example, entry/exit). Both situations must have open (non-conducting) output contacts in a power OFF condition.

**Positive-Opening Safety Switches**

Two (or four) independent switches, each with a minimum of one closed safety contact to initiate the mute cycle, are typically used. *An application using a single switch with a single actuator and two closed contacts could result in an unsafe situation.*

**Inductive Proximity Sensors**

Typically, inductive proximity sensors are used to initiate a muted cycle when a metal surface is detected. Due to excessive leakage current causing false ON conditions, two-wire sensors are not to be used. Only three- or four-wire sensors that have discrete PNP or hard-contact outputs that are separate from the input power can be used.

**NOTE:** Typical Entry/Exit is Dark Operate (DO) with through-beam or polarized retroreflective sensors. Typical Home Position and Power Press applications are Light Operate (LO) or closed switch to mute.

**WARNING:**

- **Avoid hazardous installations**
- Improper adjustment or positioning could result in serious injury or death.
- Properly adjust or position the two or four independent position switches so that they close only after the hazard no longer exists and open again when the cycle is complete or the hazard is again present.
- The user is responsible for satisfying all local, state, and national laws, rules, codes, and regulations relating to the use of safety equipment in any particular application. Ensure that all appropriate agency requirements have been met and that all installation and maintenance instructions contained in the appropriate manuals are followed.


© Banner Engineering Corp. All rights reserved.

## 7.6 Mute Enable (ME)

The Mute Enable function (mute configuration options 1 and 2) allows the user control of the start of a mute condition. When the Mute Enable input is closed, the receiver will allow a mute condition to occur; opening this input while the System is muted will have no effect.

Typical uses for Mute Enable include:

- To allow the machine control logic to create a “window” for muting to begin;
- To inhibit muting from occurring; or
- To reduce the chance of unauthorized or unintended bypassing or defeat of the safety system.

**Simultaneity Timer Reset Function**

The Mute Enable input (ME/OR2) can also be used to reset the simultaneity timer of the mute inputs. If one mute input is active for longer than three seconds before the second input becomes active, the simultaneity timer will prevent a mute from occurring. This could be due to a normal stoppage of an assembly line that may result in blocking one mute device and the simultaneity time running out.

If the ME/OR2 input is cycled (closed-open-closed) while at least one mute input is active, the simultaneity timer is reset. If both mute inputs then becomes active within three seconds of each other, a normal mute begins. The timing requirement for the closed-open-closed is similar to the manual reset function. Initially, the input needs to be closed (+24V dc), then open for longer than 1/4 second, but not longer than 2 seconds, and then must re-close to reset the simultaneity timer. The function can reset the timer only once per mute.

**NOTE:** The Simultaneity Timer Reset function using the ME/OR2 input may not be used to reset an expired Mute Timer (Backdoor Timer).

## 7.7 Muting Timing Sequences

*Figure 40. Timing Logic: Mute Configuration 1 or 2, Mute Function with Mute Enable*

**NOTE:** The timing logic is the same for two and four mute device applications as there are only two mute device inputs.

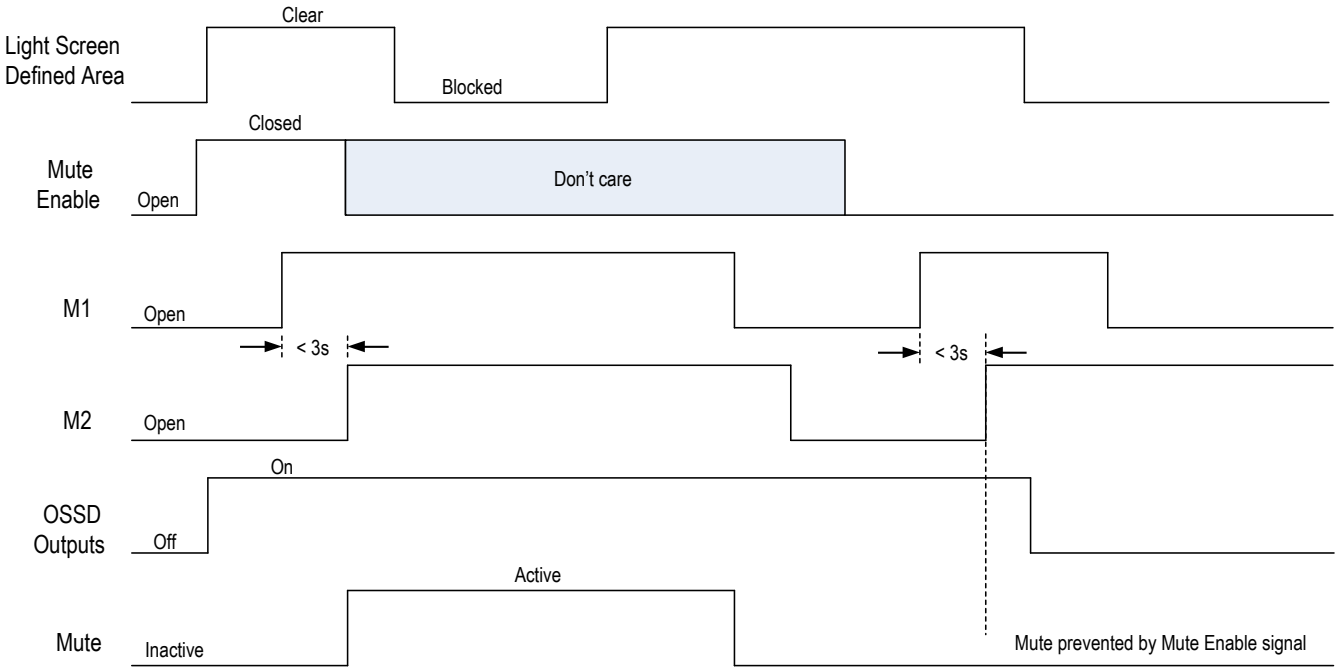



© Banner Engineering Corp. All rights reserved.
www.bannerengineering.com

*Figure 41. Timing Logic: Mute Configurations 7 and 8, Mute Function*

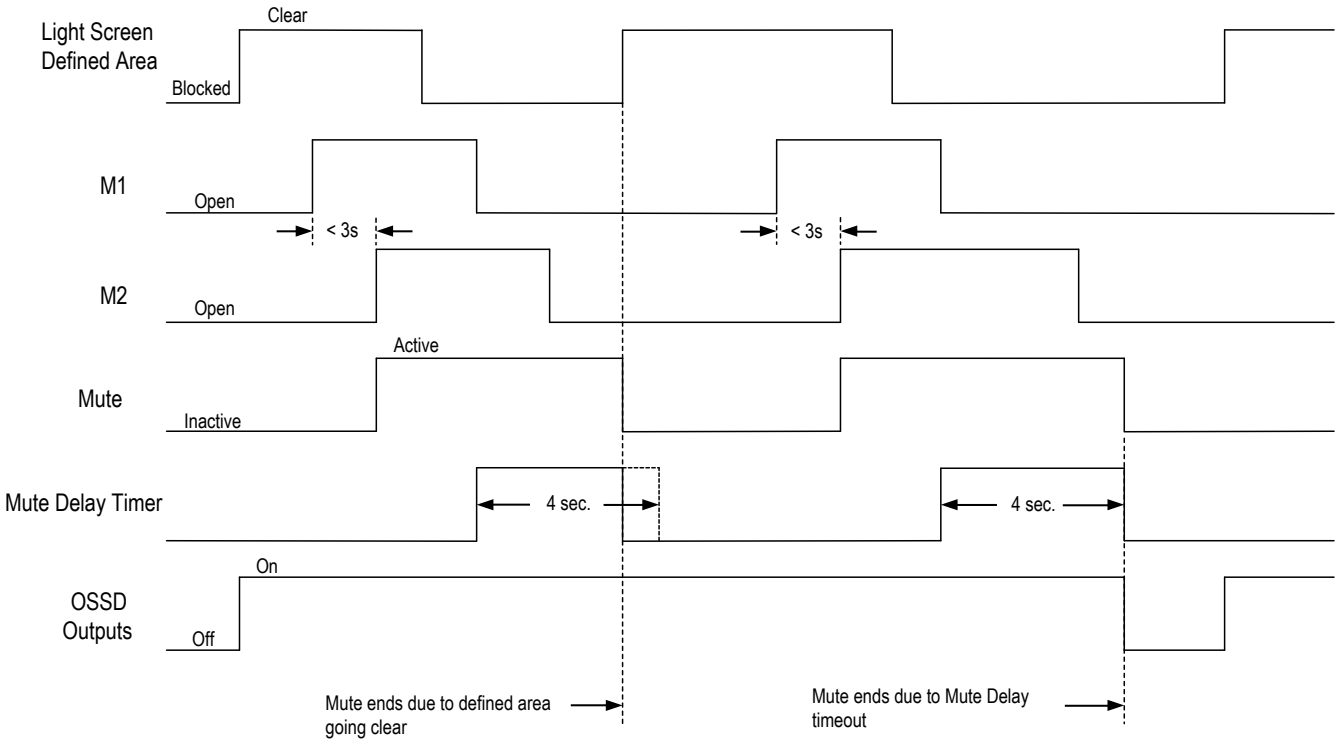


# 7.8 Mute Lamp Output

The Mute Lamp output provides for the visible indication that the safety device's safeguarding function is muted. This indication must be readily observable. Failure of this indication should be detectable and prevent the safeguard from being muted, or the operation of the indicator should be verified at suitable intervals. The Mute Lamp output also indicates an Override or Bypass condition.

*Figure 42. Mute lamp*




Some applications require a lamp (or some other means) be used to indicate when the EZ-SCREEN LPM is muted. The EZ-SCREEN LPM can be configured for a monitored or a non-monitored output signal. If a mute indicator fails (current draw falls below 10 mA or goes above 360 mA) while configured for monitored output, the system will prevent the initiation of a mute operation.


© Banner Engineering Corp. All rights reserved.
www.bannerengineering.com

**CAUTION:**

- **Mute status must be readily observed**
- Failure of the mute indicator should be detectable from the location of the muted device and prevent the next mute.
- Verify the indicator's operation at suitable intervals. Provide easily observed indication that the safety device is muted. Select lamp monitoring if the application requires compliance with UL 61496.

DELPEF-4xD or DELPEF-5xD cordsets, depending on EZ-LIGHT model. See "4 and 5-Pin M12 QD Cordsets" on page 90 for additional cordset information and "EZ-LIGHT® for EZ-SCREEN® Low Profile with Muting" on page 92 for additional EZ-LIGHT information.


© Banner Engineering Corp. All rights reserved.
www.bannerengineering.com

Chapter Contents

8.1 Bypass and Mute-Dependent Override ..... 67
8.2 Selectable Trip/Latch Outputs ..... 70

# Chapter 8 System Configuration Settings

If not previously configured, System settings are made on the configuration panels located on each sensor, behind the access door. The access door is opened by loosening the factory-installed screw (M2 / Phillips #1).

The receiver has redundant Trip/Latch and Reduced Resolution DIP switches, which must be set identically. Failure to do so will cause a Lockout condition when power is applied. **If the corresponding pairs of DIP switches are not set identically, the EZ-SCREEN LPM will not operate.**

**Power to the EZ-SCREEN LPM receiver should be OFF when changing DIP switch settings (other than Scan Code, Aux/Fault Output, or Invert Display) or a Lockout will occur.**

After configuration settings are verified/set, fully close the access door and tighten the screw to maintain the sensor IP rating.

*Figure 43. Accessing the configuration switches*




Underlined entries indicate factory defaults. “Left” and “right” refer to positions as shown.

*Table 7. DIP Switch Settings*

| Label | Left Position (<–) | Right Position (–>) |
|---|---|---|
| **T/L** | Trip Output | Latch Output |
| **RED RES** | 2-Beam Reduced Resolution enabled | Reduced Resolution Off |
| **SCAN** | Scan Code 2 | Scan Code 1 |
| **ML** | Mute Lamp monitoring On | Mute Lamp monitoring Off |
| **AUX/FLT** | Aux (OSSD follow) | Fault (lockout) |
| **INVERT** | Inverted display | OFF (Standard display) |
| **TEST (Emitter)** | Test function | Reset function |
| **FAULT (Emitter)** | ON | OFF |

**Trip or latch output operation** is selected on two DIP switches in the receiver configuration port. Both switches must be set to the same setting. If they have different settings, an error code displays. If the switches are set for trip output (T), the EZ-SCREEN LPM will auto-reset after a blocked condition. If the switches are set for latch output (L), it will require a manual reset.

**Reduced Resolution:** Enables or disables two-beam reduced resolution, and is selected on two DIP switches that must be set to the same setting.


© Banner Engineering Corp. All rights reserved.
www.bannerengineering.com

**Scan code** is used to allow operation of multiple pairs of emitters and receivers in close proximity by enabling a receiver to recognize beams only from an emitter with the same Scan Code setting. This helps minimize the effects of crosstalk between multiple emitter/receiver pairs and allows multiple pairs to operate in close proximity in certain situations. The scan code may be set to 1 or 2, via DIP switches on each component. The scan code setting for each emitter must agree with its corresponding receiver. Scan code settings may be changed while in Run mode without causing a Lockout.

**Mute Lamp (ML)** is used to select between a monitored and non-monitored output to indicate the muted condition. For a monitored output, the current draw of the device under load (for example, indicator) must be between 10 mA and 360 mA (+24V dc) or the mute operation will be prevented.

**Auxiliary/Fault Output (Receiver):** Determines whether the receiver auxiliary output follows the state of the OSSDs (output On = Green Status LED) or if the sensor is in a lockout (output ON = Fault).

**Inverted Display:** Inverts the 7-segment display for readability when sensors are mounted with the indicator end facing up. DIP switch position Off results in standard orientation.

**Test/Reset:** This emitter-only function is used to configure the violet wire (pin 8) for either a Reset function (similar to the receiver), or for a Test function. An external switch, typically a normally open contact, held closed, is connected between the emitter and 24 V DC. Opening the switch “turns off” the emitter, simulating an interruption of one or more light beams. This function may be useful for EZ-SCREEN LPM setup and to verify machine control circuit operation.

**Fault (Emitter):** This emitter-only function is used to determine whether the emitter Fault signal is active (+24V) when the emitter locks out. Options are On or Off.

# 8.1 Bypass and Mute-Dependent Override

"Overriding" or "Bypassing" a safeguarding device is the manual interruption or suspension of the normal function of a safeguard under supervisory control. Typically, an Override/Bypass is needed to clear an object that is "stuck" within the light curtain defined area, such as on an entry/exit application.

Overriding or bypassing a safeguarding device should not be confused with "muting," which is the temporary, automatic suspension of the safeguarding function of a safeguarding device during a non-hazardous portion of the machine cycle. Muting allows for material to be manually or automatically fed into a machine or process without issuing a stop command. Another term commonly confused with bypassing is "blanking," which desensitizes a portion of the sensing field of an optical safeguarding device (e.g., disabling one or more beams of a safety light curtain so that a specific beam break is ignored).

When Override or Bypass is used, the following precautions must be taken:

- Prevent exposure to any hazard during an Override/Bypass; supplemental safeguarding must be provided per ANSI B11.19, NFPA79, IEC/EN60204-1, and ISO13849-1
- The means of overriding/bypassing and visual indication must be provided and be readily observable from the location of the safeguard
- The reset, actuation, clearing, or enabling of the safeguarding device must not initiate hazardous motion or create a hazardous situation

The Override/Bypass switches must be supervised and must prevent automatic operation. This function requires complementary inputs; **one normally open switch connected to the Reset/OR1 input (violet wire, pin 12) and one normally closed switch connected to the ME/OR2 input (pink wire, pin 6)**. Also, one or more of the following must be true:

- Motion should be initiated by a hold-to-run or similar device
- If a portable control station, for example, an enabling device, with an emergency stop device is used, motion may be initiated only from that station. All emergency stops must remain active.
- Automatic machine operation must be prevented by limiting range of motion, speed, or power, for example used only in inch, jog, or slow speed modes)

**Mute-Dependent Override function** (mute configuration option 5, 6, and 7) allows the user to manually force the OSSD outputs On for up to 60 seconds. To initiate an override, the light curtain defined area must be blocked with the OSSD outputs Off, and at least one mute device must be blocked. When the conditions for an override are met, the external mute lamp will flash. At this time, the normally open switch on Reset/OR1 must close, and the normally closed switch on ME/OR2 must open within 3 seconds of each other. If these requirements are met, the external mute lamp will turn ON steady to indicate an override has occurred and the OSSDs will be On.

**Bypass function** (mute configuration options 3, 4 and 8) allows the user to manually force the OSSD outputs On for up to 5 minutes. To initiate a bypass, the light curtain cannot be in Lockout (fault) state, the normally open switch on Reset/OR1 must close, and the normally closed switch on ME/OR2 must open within 3 seconds of each other. If these requirements are met, the external mute lamp will turn On to indicate a bypass has occurred and the OSSDs will be On.


© Banner Engineering Corp. All rights reserved.

**WARNING:**

- **Limit the use of the bypass and/or override function**
- Failure to follow these instructions could result in serious injury or death.
- The bypass and/or override function is not intended for production purposes; use it only for temporary or intermittent actions, such as to clear the defined area of a safety light curtain if material becomes stuck. When bypass and/or override is used, the user must install and use it according to applicable standards (such as NFPA 79 or IEC/EN 60204-1).

## 8.1.1 Override Timing Sequence

*Figure 44. Timing logic: Mute configuration 5 or 6, Mute-Dependent Override Function*

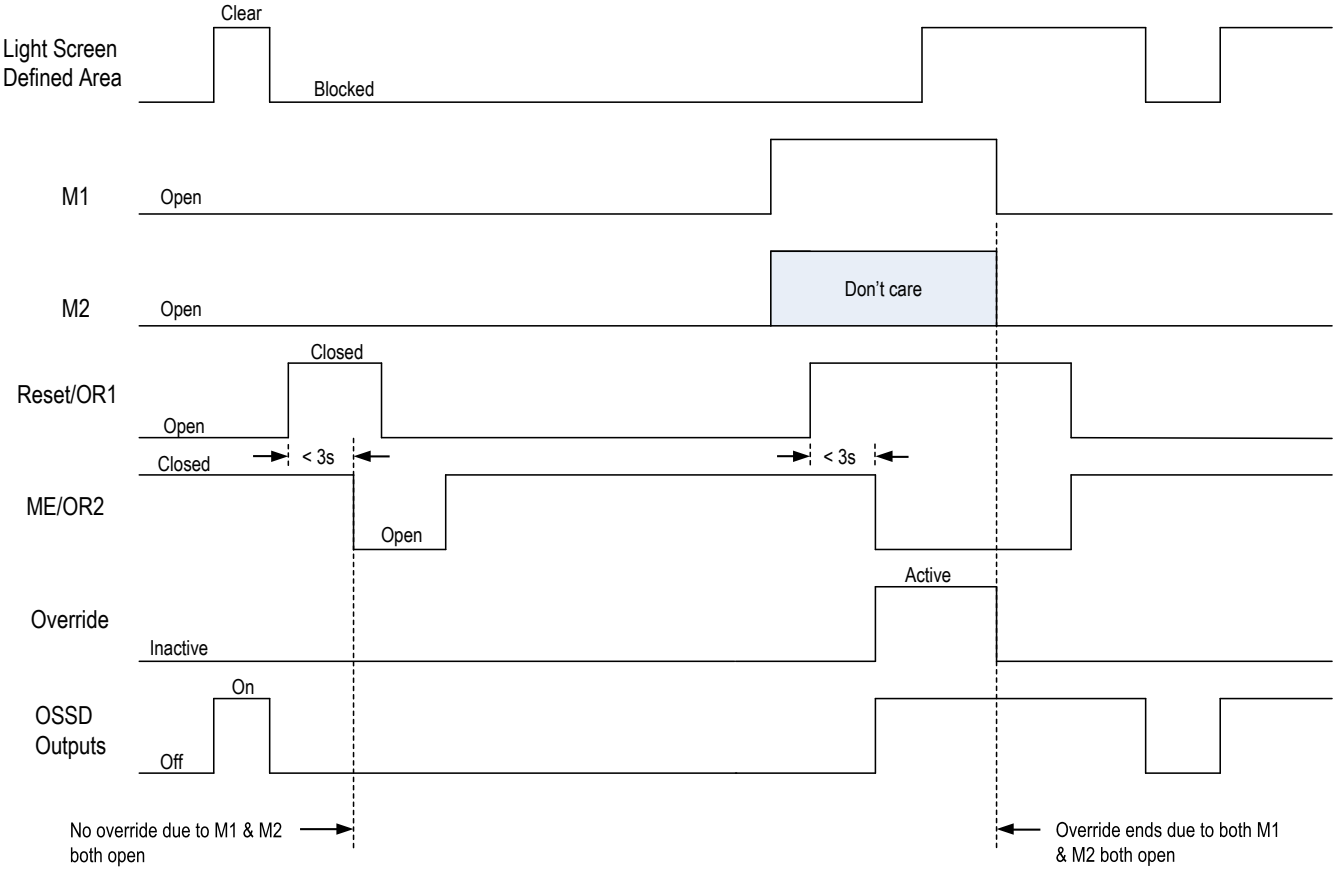



© Banner Engineering Corp. All rights reserved.
www.bannerengineering.com

*Figure 45. Timing logic: Mute configuration 7, Mute-Dependent Override Function*

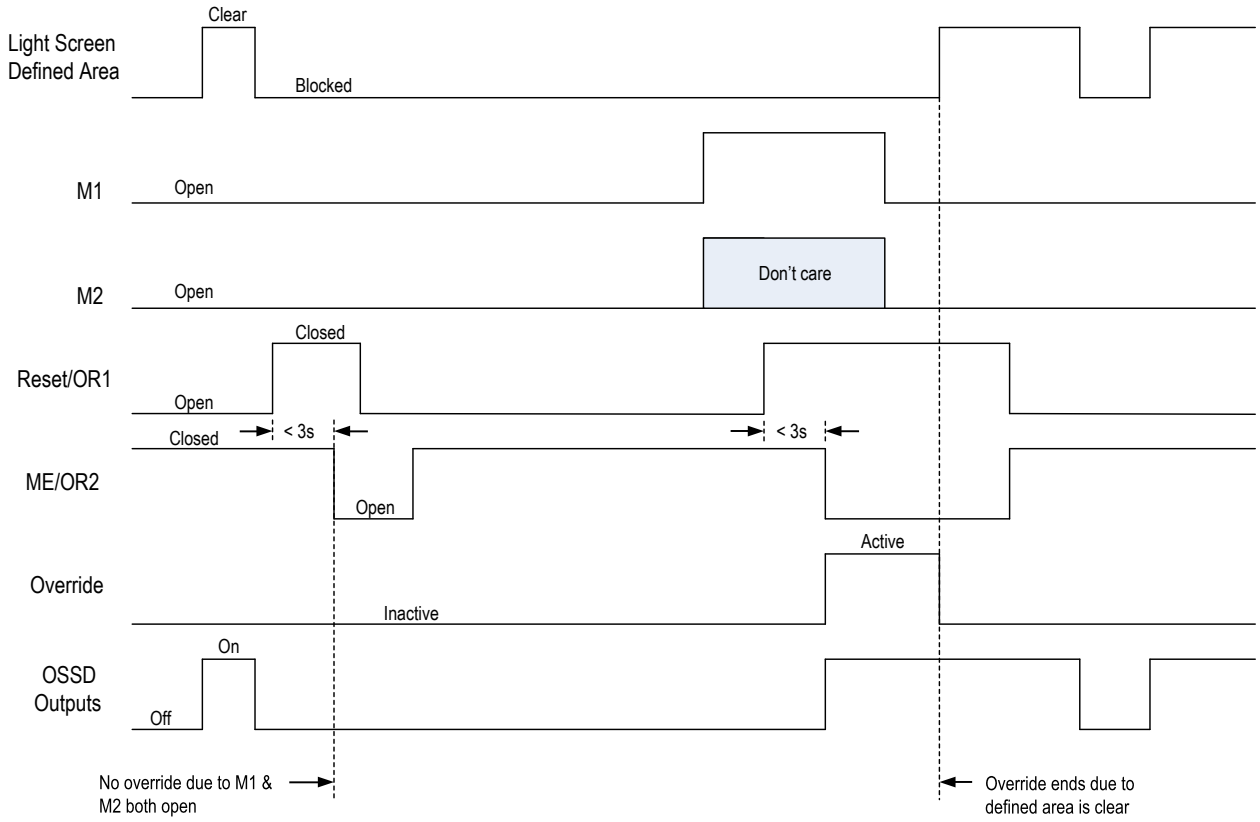



© Banner Engineering Corp. All rights reserved.
www.bannerengineering.com

### 8.1.2 Bypass Timing Sequence

*Figure 46. Timing Logic: Mute Configurations 3, 4, or 8, Bypass Function*

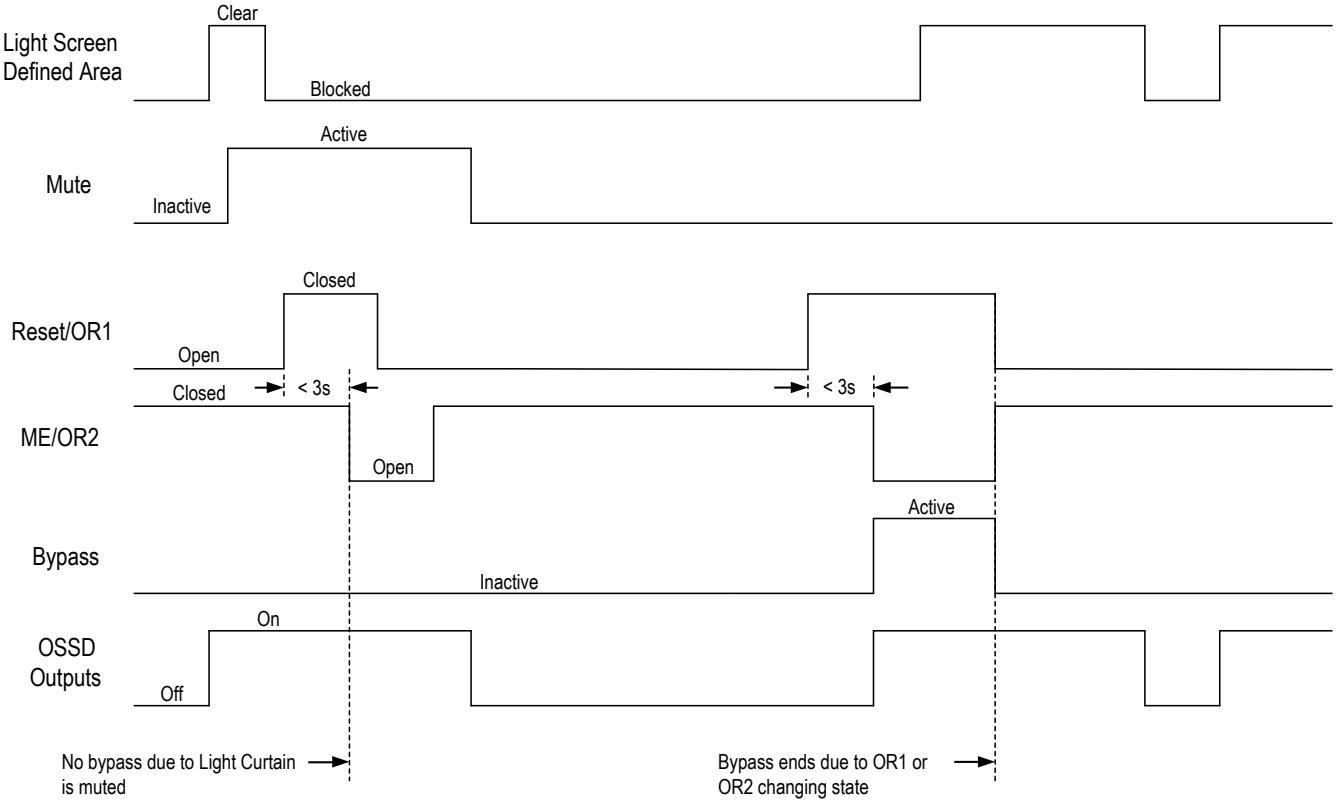


## 8.2 Selectable Trip/Latch Outputs

The setting for Trip or Latch Output determines whether the System will enter RUN mode automatically after power-up, or if it will require a manual reset first. If the System is set for Trip Output, other measures must be taken to prevent a pass-through hazard.

- If Trip Output is selected, the OSSD outputs will turn ON after power is applied and the receiver passes its internal self-test/synchronization and recognizes that all beams are clear. The OSSD outputs will also turn on after all beams are cleared following a blocked beam.
- If Latch Output is selected, the EZ-SCREEN LPM requires a manual reset for the OSSD outputs to turn ON, whenever power is applied and all beams are clear, or following a blocked beam.

**WARNING:**

- **Use of automatic (trip) or manual (latch) start/restart**
- Failure to follow these instructions could result in a serious injury or death.
- Applying power to the Banner Engineering Corp. device, clearing the defined area, or resetting a latch condition must not initiate dangerous machine motion. Design the machine control circuitry so that one or more initiation devices must be engaged to start the machine (a conscious act), in addition to the Banner Engineering Corp. device going into Run mode.


© Banner Engineering Corp. All rights reserved.
www.bannerengineering.com

Chapter Contents

9.1 Security Protocol ..... 71
9.2 Status Indicators ..... 71
9.3 Normal Operation ..... 73

# Chapter 9 System Operation

## 9.1 Security Protocol

Certain procedures for installing, maintaining, and operating the EZ-SCREEN LPM must be performed by either Designated Persons or Qualified Persons.

A **Designated Person** is identified and designated in writing, by the employer, as being appropriately trained and qualified to perform system resets and the specified checkout procedures on the EZ-SCREEN LPM. The Designated Person is empowered to:

- Perform manual resets and hold possession of the reset key (see "Reset Procedures" on page 78)
- Perform the Daily Checkout Procedure

A **Qualified Person**, by possession of a recognized degree or certificate of professional training, or by extensive knowledge, training, and experience, has successfully demonstrated the ability to solve problems relating to the installation of the EZ-SCREEN LPM System and its integration with the guarded machine. In addition to everything for which the Designated Person is empowered, the Qualified Person is empowered to:

- Install the EZ-SCREEN LPM System
- Perform all checkout procedures
- Make changes to the internal configuration settings
- Reset the System following a lockout condition

## 9.2 Status Indicators

Status indicators on both the emitter and receiver are clearly visible on each sensor's front panel.

*Figure 47. Emitter*

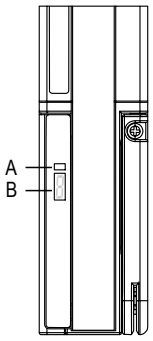


**Emitter:**

| Key | Description |
|---|---|
| A | Status Indicator (Red/Green)—shows whether power is applied, and whether the emitter is in Run mode, TEST mode, or Lockout condition. |
| B | 7-segment Diagnostic Display—indicates specific error or configuration conditions. |


© Banner Engineering Corp. All rights reserved.
www.bannerengineering.com

**Receiver:**

1-Digit Diagnostic Display—indicates specific error, configuration conditions, or total number of blocked beams.

| Key | Description |
|---|---|
| **A** | Reset Indicator |
| **B** | Status indicator (Red/Green)—shows System status:<br>• Reduced Resolution enabled (flashing green)<br>• OSSDs are ON (green ON) or OFF (red ON)<br>• The System is in Lockout condition (flashing red) |
| **C** | 7-Segment Diagnostic Display indicates specific error, configuration conditions, or number of beams blocked |
| **D** | Mute device 2 input indicator (Yellow)—shows:<br>• Object detected (yellow ON)<br>• Object not detected (yellow OFF) |
| **E** | Mute device 1 input indicator (Yellow)—shows:<br>• Object detected (yellow ON)<br>• Object not detected (yellow OFF) |
| **F** | Zone indicators (Red/Green)—each shows status of approximately 1/6 of the total beams:<br>• Aligned and clear (green ON)<br>• Blocked and/or misaligned (red ON)<br>• Fixed blanked area (flashing green) |
| **G** | Zone 1 Indicator—indicates beam synchronization status |

*Figure 48. Receiver*

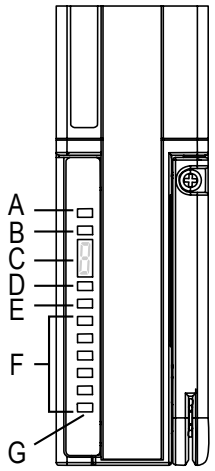


## 9.2.1 Emitter Status Indicator Codes

A single bi-color red/green Status indicator shows whether power is applied, and whether the emitter is in a Run mode, Test mode, or a Lockout. A Diagnostic Display indicates a specific error code when the emitter is in Lockout; the display also momentarily indicates the scan code setting at power-up or when changed.

*Table 8. Emitter status indicator operation*

| Operating Status | Status Indicator | 7-Segment Diagnostic Display |
|---|---|---|
| Power-up | Red Single Flash | Scan code flashes 3 times - sequentially<br>C1 or C2 |
| Run Mode | Green | - |
| Lockout | Flashing Red | Displays error code (see "Troubleshooting" on page 77) |

## 9.2.2 Receiver Status Indicator Codes

A single bi-color red/green Status indicator shows when the OSSD outputs are On (green) or Off (red), or the System is in Lockout status (flashing red).

An amber status indicator shows when the system is in Run mode or is waiting for a reset.

The Diagnostic Display indicates the receiver's trip (–) or latch (L) configuration and displays a specific error code when the receiver is in Lockout. The Diagnostic Display also momentarily indicates the scan code and mute configuration setting at power-up or when changed.

Amber Mute Device (MD) indicators show the status of the two mute device inputs. An amber indicator shows when the mute device input is at +24 V DC, for example, sensor PNP output conducting.


© Banner Engineering Corp. All rights reserved.
www.bannerengineering.com

### 9.2.3 Receiver Status Indicator Operation - Trip Output

| Operating Mode | Reset Indicator | Status Indicator | Zone Indicators[10] | 7-Segment Diagnostic Display | OSSD Outputs |
|---|---|---|---|---|---|
| Power-up | Off | Single-Flash Red | All Single-Flash Red | Scan code flashes 3 times - sequentially **C1 Ox** or **C2 Ox** where x is the selected mute configuration. | Off |
| Alignment Mode - Beam 1 Blocked | Off | Red | Zone 1 Red, Others Off | **CH1** | Off |
| Alignment Mode - Beam 1 Clear | On | Red | Red or Green | Total number of blocked beams | Off |
| Run Mode - Clear | On | Solid Green or Flashing Green[11] | All On Green | - | On |
| Run Mode - Blocked | On | Red | Red or Green | Total number of blocked beams | Off |
| Lockout | Off | Flashing Red | All Off | Displays error code (see "Troubleshooting" on page 77) | Off |

### 9.2.4 Receiver Status Indicator Operation - Latch Output

| Operating Mode | Reset Indicator | Status Indicator | Zone Indicators* | 7-Segment Diagnostic Display | OSSD Outputs |
|---|---|---|---|---|---|
| Power-up | Off | Single-Flash Red | All Single-Flash Red | Scan code flash 3 times - sequentially **C1 Ox** or **C2 Ox** where x is the selected mute configuration | Off |
| Alignment Mode - Beam 1 Blocked | Off | Red | Zone 1 Red*, Others Off | **CH1** | Off |
| Alignment Mode - Beam 1 Clear | On | Red | Red or Green | Total number of blocked beams | Off |
| Alignment Mode - All Beams Clear | Double-Flash | Red | All On green | Off | Off |
| Run Mode - Clear | On | Solid Green or Flashing Green (flashing if Reduced Resolution is enabled.) | All On Green | **L** | On |
| Latched - Blocked Beam 1 Blocked | On | Red | Red or Green* | **CH1** | Off |
| Latched - Blocked Beam 1 Clear | On | Red | Red or Green* | Total number of blocked beams | Off |
| Latched - Clear | Flashing | Red | All On Green | **L** | Off |
| Lockout | Off | Flashing Red | Off | Displays error code (see "Lockout Conditions" on page 77) | Off |

* If beam 1 is blocked, indicators 2–6 will be Off, because beam 1 provides the synchronization signal for all the beams.

## 9.3 Normal Operation

### 9.3.1 System Power-Up

The EZ-SCREEN LPM powers up in one of two ways, depending on the trip/latch output configuration. If it is set for trip output, it powers up and resets automatically; if it is set for latch output, it requires a manual reset procedure after the power-up and sensor alignment.

**Trip Output Power-Up**: When power is applied, each sensor conducts self-tests to detect critical internal faults, determine configuration settings, and prepare the EZ-SCREEN LPM for operation. If either sensor detects a critical fault, scanning ceases, the receiver outputs remain Off and diagnostic information displays on the sensor's Diagnostic Display. If no faults are detected, the EZ-SCREEN LPM automatically enters Alignment mode, and the receiver looks for an optical sync pattern

[10] If beam 1 is blocked, Zone indicators 2–6 will be Off, because beam 1 provides the synchronization signal for all the beams.
[11] Flashing if Reduced Resolution is enabled (except the first).


© Banner Engineering Corp. All rights reserved.
www.bannerengineering.com

from the emitter. If the receiver is aligned and receives the proper sync pattern, it enters Run mode and begins scanning to determine the blocked or clear status of each beam. No manual reset operation is required.

**Latch Output Power-Up**: When power is applied, each sensor conducts self-tests to detect critical internal faults, determine configuration settings, and prepare for operation. If either sensor detects a critical fault, scanning ceases, the receiver outputs remain Off and diagnostic information is displayed on the sensor's Diagnostic Display. If no faults are detected, the EZ-SCREEN LPM automatically enters Alignment mode, and the receiver looks for an optical sync pattern from the emitter. If the receiver is aligned and receives the proper sync pattern, it begins scanning to determine the blocked or clear status of each beam. When all beams are aligned, the Yellow Reset indicator double-flashes to indicate the EZ-SCREEN LPM is waiting for a manual reset. After a valid manual reset, the EZ-SCREEN LPM enters Run mode and continues scanning.

### 9.3.2 Run Mode

**Trip Output Configuration**: If any beams become blocked while the EZ-SCREEN LPM is running with trip output selected, the receiver outputs turn Off within the stated EZ-SCREEN LPM response time (see "Specifications" on page 14). If all the beams then become clear, the receiver outputs come back On. No resets are needed. All required machine control resets are provided by the machine control circuit.

**Latch Output Configuration**: If any beams become blocked while the EZ-SCREEN LPM is running with latch output selected, the receiver outputs turn Off within the stated EZ-SCREEN LPM response time (see "Specifications" on page 14). If all the beams then become clear, the receiver Zone indicators will all be Green and the Reset indicator single-flashes, indicating the EZ-SCREEN LPM is waiting for a manual latch reset. In latch output operation, the outputs come back On only when all beams are clear and after a manual reset. The EZ-SCREEN LPM will wait for a manual reset; when a valid reset signal is received and all beams remain clear, the receiver outputs turn On.

**Internal Faults (Lockouts)**: If either sensor detects a critical fault, scanning ceases, the receiver outputs turn Off and diagnostic information displays on the sensor's Diagnostic Display. For resolution of error/fault conditions, see "Lockout Conditions" on page 77.


© Banner Engineering Corp. All rights reserved.

Chapter Contents

10.1 Periodic Checkout Requirements ..... 75
10.2 Schedule of Checkouts ..... 75

# Chapter 10 Checkout Procedures

This section lists the schedule of checkout procedures and describes where each procedure is documented. Checkouts must be performed as described. Results should be recorded and kept in the appropriate place (for example, near the machine, and/or in a technical file).

Banner Engineering highly recommends performing the System checkouts as described. However, a Qualified Person (or team) should evaluate these generic recommendations, considering their specific application, and determine the appropriate frequency of checkouts. This will generally be determined by a risk assessment, such as the one contained in ANSI B11.0. The result of the risk assessment will drive the frequency and content of the periodic checkout procedures and must be followed.

## 10.1 Periodic Checkout Requirements

To ensure continued reliable operation, the System must be checked out periodically. Banner Engineering highly recommends performing the System checkouts as described below. However, a Qualified Person should evaluate these recommendations, based on the specific application and the results of a machine risk assessment, to determine the appropriate content and frequency of checkouts.

**At every shift change, power-up, and machine setup change,** the Daily Checkout should be performed; this checkout may be performed by a Designated or Qualified Person.

**Semi-annually,** the System and its interface to the guarded machine should be thoroughly checked out; this checkout must be performed by a Qualified Person (see "Schedule of Checkouts" on page 75). A copy of these test results should be posted on or near the machine.

**Whenever changes are made to the System** (either a new configuration of the EZ-SCREEN LPM System or changes to the machine), perform the Commissioning Checkout (see "Commissioning Checkout" on page 51).

**Verify Proper Operation** The EZ-SCREEN LPM can operate as it is designed only if it and the guarded machine are operating properly, both separately and together. It is the user's responsibility to verify this, on a regular basis, as instructed in "Schedule of Checkouts" on page 75. Failure to correct such problems can result in an increased risk of harm. Before the System is put back into service, verify that the EZ-SCREEN LPM System and the guarded machine perform exactly as outlined in the checkout procedures and any problem(s) are found and corrected.

## 10.2 Schedule of Checkouts

Checkout cards and this manual can be downloaded at www.bannerengineering.com.

| Checkout Procedure | When to Perform | Where to Find the Procedure | Who Must Perform the Procedure |
|---|---|---|---|
| Trip Test | At Installation<br><br>Any time the System, the guarded machine, or any part of the application is altered. | "Perform a Trip Test" on page 42 | Qualified Person |
| Commissioning Checkout | At Installation<br><br>Whenever changes are made to the System (for example, either a new configuration of the EZ-SCREEN LPM or changes to the guarded machine). | "Commissioning Checkout" on page 51 | Qualified Person |

Continued on page 76


© Banner Engineering Corp. All rights reserved.
www.bannerengineering.com

Continued from page 75

| Checkout Procedure | When to Perform | Where to Find the Procedure | Who Must Perform the Procedure |
|---|---|---|---|
| Shift/Daily Checkout | At each shift change<br>Machine setup change<br>Whenever the System is powered up<br>During continuous machine run periods, this checkout should be performed at intervals not to exceed 24 hours. | **Daily Checkout Card** (Banner p/n 150217)<br>A copy of the checkout results should be recorded and kept in the appropriate place (for example, near or on the machine, in the machine's technical file). | Designated Person or Qualified Person |
| Semi-Annual Checkout | Every six months following System installation, or whenever changes are made to the System (either a new configuration of the EZ-SCREEN LPM or changes to the machine). | **Semi-Annual Checkout Card** (Banner p/n 150218)<br>A copy of the checkout results should be recorded and kept in the appropriate place (for example, near or on the machine, in the machine's technical file). | Qualified Person |


© Banner Engineering Corp. All rights reserved.
www.bannerengineering.com

Chapter Contents

11.1 Lockout Conditions ..... 77
11.2 Reset Procedures ..... 78
11.3 Emitter and Receiver Resets ..... 78
11.4 Emitter Error Codes ..... 79
11.5 Receiver Error Codes ..... 79
11.6 Test Mode ..... 81
11.7 Electrical and Optical Noise ..... 81

# Chapter 11 Troubleshooting

## 11.1 Lockout Conditions

**WARNING:**
- **Shut down the machinery before servicing**
- Servicing the Banner Engineering Corp. device or system while the hazardous machinery is operational could result in serious injury or death.
- The machinery to which the Banner Engineering Corp. device or system is connected must not be operating at any time during major service or maintenance. This might require lockout/tagout procedures (refer to OSHA1910.147, ANSI Z244-1, ISO 14118 or the applicable standard for controlling hazardous energy).

A Lockout condition causes all of the EZ-SCREEN LPM OSSD outputs to turn or remain Off, sending a stop signal to the guarded machine. Each sensor provides diagnostic error codes to assist in the identification of the cause(s) of lockouts (see "Emitter Error Codes" on page 79 and "Receiver Error Codes" on page 79) or the Diagnostic Error Code label supplied in the documentation pack).

**WARNING:**
- **Lockouts and power failures indicate a problem**
- Attempts to continue to operate machinery by bypassing the Banner Engineering Corp. device or other safeguards is dangerous and could result in serious injury or death.
- A Qualified Person[12] must immediately investigate the problem.

The following tables indicate a sensor lockout condition:

*Table 9. Receiver Lockout Conditions*

| Indicator | Receiver Lockout Conditions | Emitter Lockout Conditions |
|---|---|---|
| **Reset indicator** | Off | |
| **Status indicator** | Flashing red | Flashing red |
| **Zone indicators** | Off | |
| **Diagnostic display** | Error code (flashing) | Error code (flashing) |
| **Mute Device indicators** | Off | |

[12] A person who, by possession of a recognized degree or certificate of professional training, or who, by extensive knowledge, training and experience, has successfully demonstrated the ability to solve problems relating to the subject matter and work.


© Banner Engineering Corp. All rights reserved.
www.bannerengineering.com

## 11.2 Reset Procedures

System resets are performed using an external reset switch. This switch must be located outside the guarded area, and must not be within reach from within the guarded area (see "Reset Switch Location" on page 24). Its location should provide a clear view of the entire safeguarded area. If any hazardous area is not in view from the switch location, additional means of safeguarding must be provided. The switch should be protected from accidental or unintended actuation (for example, through the use of rings or guards).

If supervisory control of the reset switch is required, a key reset (manual reset) switch may be used, with the key kept in the possession of a Designated Person or Qualified Person. Using a key switch provides some level of personal control, since the key may be removed from the switch. This hinders a reset while the key is under the control of an individual, but must not be relied upon solely to guard against accidental or unauthorized reset. Spare keys in the possession of others or additional personnel entering the safeguarded area unnoticed may create a hazardous situation.

## 11.3 Emitter and Receiver Resets

**WARNING:**

- **Lockouts and power failures indicate a problem**
- Attempts to continue to operate machinery by bypassing the Banner Engineering Corp. device or other safeguards is dangerous and could result in serious injury or death.
- A Qualified Person[13] must immediately investigate the problem.

**WARNING:**

- **Shut down the machinery before servicing**
- Servicing the Banner Engineering Corp. device or system while the hazardous machinery is operational could result in serious injury or death.
- The machinery to which the Banner Engineering Corp. device or system is connected must not be operating at any time during major service or maintenance. This might require lockout/tagout procedures (refer to OSHA1910.147, ANSI Z244-1, ISO 14118 or the applicable standard for controlling hazardous energy).

The EZ-SCREEN LPM receiver and emitter each have a Reset input that provides for a manual reset input signal.

The receiver requires a manual reset to clear a Latch condition and resume operation following a stop command. Internal Lockout conditions also require a manual reset to return either the emitter or the receiver to Run mode after the failure has been corrected. Emitter resets are needed only in the unlikely event that a Lockout occurs.

Receiver manual resets are required in the following situations:

- Trip Output operation – only after a Lockout (see "Lockout Conditions" on page 77 for causes).
- Latch Output operation – at power-up, after each Latch condition occurs, or after a Lockout.

**Reset Routine**

To reset the emitter and/or receiver:

1. Close the reset switch for 0.25 to 2 seconds.
2. Open the reset switch.

An alternative method to reset either component after a lockout is to power the sensor down, then power it up.

If reset switch model MGA-KSO-1 (see "Accessories" on page 83 ) is used:

1. Turn the key 1/4 turn clockwise to close.
2. Turn the key counterclockwise, back to its original position, to open.

[13] A person who, by possession of a recognized degree or certificate of professional training, or who, by extensive knowledge, training and experience, has successfully demonstrated the ability to solve problems relating to the subject matter and work.


© Banner Engineering Corp. All rights reserved.

**NOTE:** Closing the reset switch too long will cause the sensor to ignore the reset request; the switch must be closed from 0.25 seconds to 2 seconds, but no longer.

**NOTE:** If the receiver is set for latch output, a manual reset using a remote switch, as described in "Reset Procedures" on page 78, is required to resume full operation.

## 11.4 Emitter Error Codes

| Diagnostic Display | Error Description | Appropriate Action |
|---|---|---|
|  | **Emitter Error**<br><br>This error can occur either due to excessive electrical noise or due to an internal failure. | • Reset the emitter per "Reset Procedures" on page 78<br>• If the error clears, perform the daily checkout procedure (per EZ-SCREEN Checkout Procedures: Shift and Daily Checkout Procedure; Daily Checkout Card). If the System checks out, resume operation. If the System fails, replace the emitter<br>• If the error continues, check the ground connection (see "Cordsets" on page 83)<br>• If the sensor has a good earth ground connection, check for electrical noise (see "Electrical and Optical Noise" on page 81)<br>• If the error persists, replace the emitter |
|  | **Excessive Noise Error**<br><br>This error can occur due to excessive electrical noise. | • Reset the emitter per "Reset Procedures" on page 78.<br>• If the error clears, perform the daily checkout procedure (per EZ-SCREEN Checkout Procedures: Shift and Daily Checkout Procedure; Daily Checkout Card). If the System checks out, resume operation. If the System fails, replace the emitter<br>• If the error continues, check the ground connection (see "Cordsets" on page 83)<br>• If the sensor has a good earth ground connection, check for electrical noise (see "Electrical and Optical Noise" on page 81)<br>• If the error persists, replace the emitter |
|  | **Emitter LED Problem**<br><br>This is not an error. | This indication can occur due to a potential problem with an LED and is provided as an early warning indicator |
| **"Axx"/"cxx"**, where "xx" are alpha-numeric characters | **Advanced Diagnostics** for the purpose of factory troubleshooting and repair; not intended for field troubleshooting. | If advanced diagnostic codes are inadvertently displayed, toggle the Invert Display DIP switch (to the opposite state and back, within 1 second) to return to the standard error code display |

## 11.5 Receiver Error Codes

| Diagnostic Display | Error Description | Cause of Error and Appropriate Action |
|---|---|---|
|  | **Output Error**<br><br>**Error is caused by:**<br>• one or both outputs being shorted to a power supply (high or low)<br>• by shorting OSSD 1 to OSSD 2<br>• by an overload (greater than 0.5A) | • Disconnect the OSSD loads and reset the receiver.<br>• If the error clears, the problem is in the OSSD load(s) or in the load wiring.<br>• If the error continues with no load connected, replace the receiver. |
|  | **Reset Input Error**<br><br>This error occurs when the Reset switch is closed (or the wiring is shorted to +24 V) during power-up. | • Verify that the reset switch is in the open position.<br>• Reset the receiver per EZ-SCREEN Checkout Procedures: Shift and Daily Checkout Procedure.<br>• If the error remains, disconnect the reset wire at pin 8; cycle power.<br>• If the error clears, the problem is in the reset switch or in the wiring.<br>• If the error continues when the reset wire is disconnected, replace the receiver. |

Continued on page 80


© Banner Engineering Corp. All rights reserved.
www.bannerengineering.com

Continued from page 79

| Diagnostic Display | Error Description | Cause of Error and Appropriate Action |
|---|---|---|
|  | **Receiver Error**<br><br>This error can occur due to either excessive electrical noise or an internal failure. | • Perform a reset per EZ-SCREEN Checkout Procedures: Shift and Daily Checkout Procedure.<br>• If the error clears, perform a Daily Checkout procedure (per EZ-SCREEN Checkout Procedures: Shift and Daily Checkout Procedure; Daily Checkout Card) and if OK, resume operation. If the System fails the Daily Checkout procedure, replace the receiver.<br>• If the error continues, check the ground connection (pin 7).<br>• If the sensor has a good earth ground connection to pin 7, perform the Initial Checkout procedure (per "Reset Procedures" on page 78).<br>• If the error clears, check the external connections and configuration settings.<br>• If the error continues, replace the receiver. |
|  | **DIP Switch Error**<br><br>This error can be caused by incorrect DIP switch settings or by changes to the DIP switch settings when the system is ON. | • Verify that the DIP switch settings are valid (per "System Configuration Settings" on page 66). Make any corrections necessary and perform a receiver reset.<br>• If the error occurred due to a change of the DIP switch settings while the System was in Run mode, verify the switch settings and perform a receiver reset to resume operation with the new switch settings and modified System configuration.<br>• If the error continues, replace the receiver. |
|  | **EDM Error**<br><br>This error can occur due to EDM input signal failing to respond within 250 ms of the OSSDs changing state (ON to OFF). | • Verify that the EDM wiring is correct and that the external devices meet the requirements described in "Machine Primary Control Elements and EDM Input" on page 45.<br>• If the error continues, remove power to the guarded machine, disconnect the OSSD loads, disconnect the EDM input signals, configure EDM for No Monitoring (per "Machine Primary Control Elements and EDM Input" on page 45) and conduct the Initial Checkout procedure ("Initial Checkout Procedure" on page 36).<br>• If the error clears, the problem is in the External Device contacts or wiring, or is a response-time problem of the external devices. Verify that the EDM wiring is correct and that the external devices meet the requirements described in "Machine Primary Control Elements and EDM Input" on page 45.<br>• If the error continues, check for noise on the EDM inputs (see "Electrical and Optical Noise" on page 81). |
|  | **Fixed Blanking Error**<br><br>This error occurs when beam(s) that have been blanked (programmed to ignore a fixed object) become clear when the object is removed or moved. | • Reposition the object and perform a key reset (or cycle power).<br>• Re-program (teach) the fixed blanked object(s), see "Fixed Blanking" on page 41. |
|  | **Programming Timeout Error**<br><br>This error occurs when the Fixed Blanking programming mode (teach) or Mute Configuration programming modes exceeds the ten-minute limit. | • Re-program (teach) the fixed blanked object(s), see "Fixed Blanking" on page 41.<br>• Re-program the mute configuration, see "Muting Functions" on page 54 and "Mute Configuration" on page 39. |
|  | **Muting Device Input Error** | • Verify the Muting Device Input(s) are not shorted together or to another source of power or ground. |
|  | **Bypass/Override Error** | • Verify the Override Input(s) are not active upon power-up or when exiting a lockout condition.<br>• Verify the Override Input(s) are not active when muting ends. |
|  | **Mute Lamp Error** | • Check/replace the lamp as a short or open has been detected in the mute lamp circuit.<br>• Verify the DIP switch setting is as desired. |

Continued on page 81


© Banner Engineering Corp. All rights reserved.
www.bannerengineering.com

Continued from page 80

| Diagnostic Display | Error Description | Cause of Error and Appropriate Action |
|---|---|---|
| 62 | **Excessive Noise Error – Reset Interface**<br>This error can occur due to excessive levels of electrical noise. | • Perform a reset per "Reset Procedures" on page 78.<br>• If the error clears, perform the daily checkout procedure (per EZ-SCREEN Checkout Procedures: Shift and Daily Checkout Procedure; Daily Checkout Card) and if OK, resume operation. If the System fails the Daily Checkout procedure, replace the receiver.<br>• If the error continues, check the ground connection (pin 7).<br>• If the sensor has a good earth ground connection to pin 7, perform the Initial Checkout procedure ("Perform a Trip Test" on page 42).<br>• If the error clears, check for sources of electrical noise (see "Electrical and Optical Noise" on page 81).<br>• If the error continues, replace the receiver. |
| 63 | **Excessive Noise Error – EDM Interface**<br>This error can occur due to excessive levels of electrical noise. | |
| **"Axx"/"bxx"/"Fxx"**, where "xx" are alpha-numeric characters | **Advanced Diagnostics** for the purpose of factory troubleshooting and repair; not intended for field troubleshooting. | If advanced diagnostic codes are inadvertently displayed, toggle the Invert Display DIP switch (to the opposite state and back, within 1 second) to return to the standard error code display. |

# 11.6 Test Mode

**If System will not align or go to a Green/Clear condition, the emitter's Test input may be open**. If so, the receiver Reset indicator will be yellow, all Zone indicators red, and the Status LED red; the 7-segment display will show a numerical value equal to the total number of beams, minus one. (Multiple-digit codes are displayed sequentially.) For example, if an array has 55 beams total, the display would indicate 54. The emitter's Status indicator will flash green. See "Status Indicators" on page 71 and "Receiver Error Codes" on page 79.

*Figure 49. Test Mode*

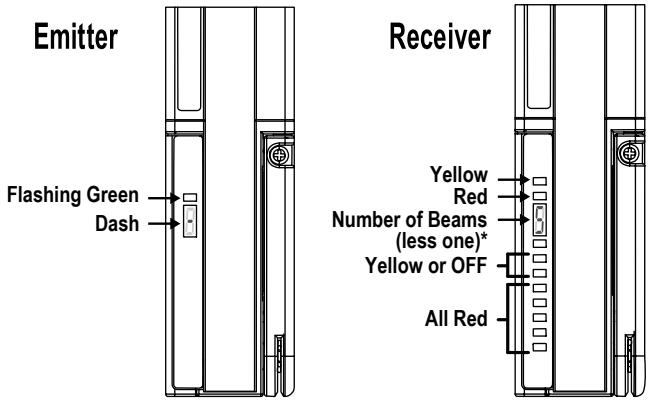


*The 7-segment display sequentially shows a numerical value equal to one less than the total number of beams. For example, if an array has 55 beams total, the display indicates 54.

Opening a switch or relay contacts connected to the emitter Test connections, or supplying a voltage of less than 3 V DC to Test only, simulates a Blocked condition, for testing purposes. To verify proper operation, measure the voltage between emitter Test (pin 8, violet) and DC COM (pin 6, blue) and refer to the following table:

| Supply Voltage | Other Conditions | Appropriate Action |
|---|---|---|
| 10 to 30 V DC | Emitter should be in Run mode with beam scanning condition | If not, check the +24 V DC (pin 1, brown) to verify proper supply voltage |
| Outside the rated supply voltage specifications | - | Correct the supply voltage and recheck emitter operation |
| 10 to 30 V DC | Test1 is 10 to 30 V DC, but emitter is not in Run mode with beam scanning | Replace the emitter |
| Less than 3 V DC | Emitter should be in Test mode with no scanning occurring | If not in Test mode, replace the emitter |

# 11.7 Electrical and Optical Noise

The EZ-SCREEN LPM is designed and manufactured to be highly resistant to electrical and optical noise and to operate reliably in industrial settings. However, serious electrical and/or optical noise may cause a random Trip or Latch condition. In


© Banner Engineering Corp. All rights reserved.
www.bannerengineering.com

very extreme electrical noise cases, a Lockout is possible. To minimize the effects of transitory noise, the EZ-SCREEN LPM responds to noise only if the noise is detected on multiple consecutive scans.

If random nuisance Trips or lockouts occur, check the following:

- Poor connection between the sensor and earth ground
- Optical interference from adjacent light screens or other photoelectrics
- Sensor input or output wires routed too close to noisy wiring

### 11.7.1 Check for Sources of Electrical Noise

It is important that the light screen sensors have a good earth ground. Without this, the System can act like an antenna and random Trips and Lockouts can occur.

All EZ-SCREEN LPM wiring is low voltage; running these wires alongside power wires, motor/servo wires, or other high-voltage wiring can inject noise into the EZ-SCREEN LPM System. It is good wiring practice (and may be required by code) to isolate EZ-SCREEN LPM wires from high-voltage wires.

1. Use the Banner model BT-1 Beam Tracker Alignment Aid (see "Alignment Aids" on page 96) to detect electrical transient spikes and surges.
2. Cover the lens of the BT-1 with electrical tape to block optical light from entering the receiver lens.
3. Press the RCV button on the BT-1 and position the Beam Tracker on the wires going to the EZ-SCREEN LPM or any other nearby wires.
4. Install proper transient suppression across the load to reduce the noise.

### 11.7.2 Check for Optical Noise Sources

Follow these steps to check for optical noise sources.

1. Turn off the emitter, completely block the emitter, or open the Test input.
2. Use a Banner BT-1 Beam Tracker (see "Alignment Aids" on page 96) to check for light at the receiver.
3. Press the RCV button on the BT-1 and move it across the full length of the receiver’s sensing window. If the BT-1’s indicator lights, check for emitted light from other sources (other safety light screens, grids or points, or standard photoelectric sensors).


© Banner Engineering Corp. All rights reserved.
www.bannerengineering.com

Chapter Contents

12.1 Cordsets ..... 83
12.2 Interface Modules ..... 90
12.3 Contactors ..... 90
12.4 Safety Controllers ..... 91
12.5 External Keyed Reset Switches ..... 91
12.6 Snap-On Lens Shields ..... 91
12.7 EZ-LIGHT® for EZ-SCREEN® Low Profile with Muting ..... 92
12.8 MSA Series Stands ..... 92
12.9 MSM Series Corner Mirrors ..... 93
12.10 SSM Series Corner Mirrors ..... 93
12.11 Accessory Mounting Brackets ..... 94
12.12 Alignment Aids ..... 96

# Chapter 12 Accessories

## 12.1 Cordsets

Machine interface cordsets provide power to the emitter/receiver pair. Cordsets have yellow PVC cables and black overmolds.

A removable disconnect (RD) fitting is required to connect directly to the sensor housing. QD fittings are used for cable-to-cable interconnections and connections to other devices.

### 12.1.1 Connection Options

| | |
|---|---|
| Models SLP...-...P8, -...P12<br><br>**300 mm cable with a 8-pin M12 QD (Emitters)**<br><br>**300 mm cable with a 12-pin M12 QD (Receivers)**<br>Requires an M12 QD cordset: QDE, DEE2R, or CSM.<br><br> | Models SLP...-..<br><br>**Removable Disconnect (RD)**<br><br>Requires an RDLP or DELPE.<br><br>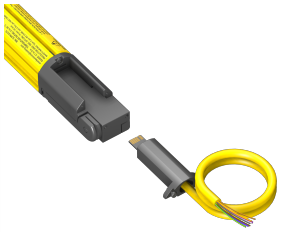 |

### 12.1.2 M12 QD to Flying Leads and RDLP to Flying Leads Cordsets

M12 QD connector on one end; unterminated (cut to length) on the other to interface with guarded machine. PVC-jacketed overmold and cables.


© Banner Engineering Corp. All rights reserved.
www.bannerengineering.com

*Table 10. Emitter Cables*

| Model | Length | Banner Cordset Pinout/Color Code | M12 Connector (female face view) |
|---|---|---|---|
| **RDLP-815D**<br>**QDE-815D** | 4.5 m (15 ft) | | |
| **RDLP-825D**<br>**QDE-825D** | 7.6 m (25 ft) | | |
| **RDLP-850D**<br>**QDE-850D** | 15.2 m (50 ft) | | |
| **RDLP-875D**<br>**QDE-875D** | 22.8 m (75 ft) | | |
| **RDLP-8100D**<br>**QDE-8100D** | 30.4 m (100 ft) | | |

| QD pin | Color | Function |
|---|---|---|
| 1 | Brown | +24 V DC |
| 2 | Or/Bk | Fault |
| 3 | Orange | N.C. |
| 4 | White | N.C. |
| 5 | Black | N.C. |
| 6 | Blue | 0 V DC |
| 7 | Gn/Ye | Gnd/Chassis |
| 8 | Violet | Reset/Test |

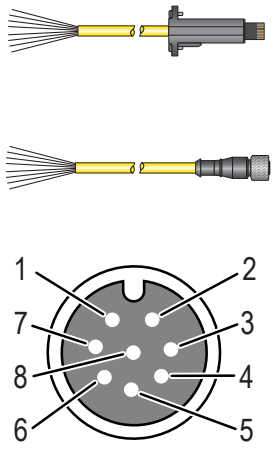


*Table 11. Receiver Cables*

| Model | Length | Banner Cordset Pinout/Color Code | M12 Connector (female face view) |
|---|---|---|---|
| **RDLP-1115E**<br>**QDE-1215E** | 4.5 m (15 ft) | | |
| **RDLP-1125E**<br>**QDE-1225E** | 7.6 m (25 ft) | | |
| **RDLP-1150E**<br>**QDE-1250E** | 15.2 m (50 ft) | | |
| **RDLP-1175E**<br>**QDE-1275E** | 22.8 m (75 ft) | | |
| **RDLP-11100E**<br>**QDE-12100E** | 30.4 m (100 ft) | | |

| QD pin | Color | Function |
|---|---|---|
| 1 | White | OSSD 2 |
| 2 | Brown | +24 V DC |
| 3 | Gn/Ye | Gnd/Chassis |
| 4 | Yellow | MD1 Input |
| 5 | Gray | MD2 Input |
| 6 | Pink | ME/OR2 |
| 7 | Blue | 0 V DC |
| 8 | Red | Aux/Fault Out |
| 9 | Orange | EDM Input |
| 10 | N.C. | N.C. |
| 11 | Black | OSSD 1 |
| 12 | Violet | Reset/OR 1 |

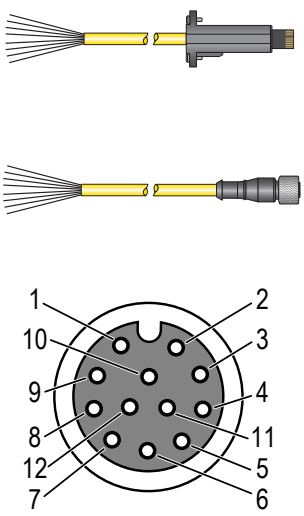



© Banner Engineering Corp. All rights reserved.
www.bannerengineering.com

## 12.1.3 12-pin M12 QD to RD Cordsets

| Model | Length | Banner Cordset Pinout/Color Code | M12 Connector (male face view) |
|---|---|---|---|
| DELPE-121E | 0.3 m (1 ft) | | |
| DELPE-123E | 1 m (3.3 ft) | | |
| DELPE-128E | 2.5 m (8 ft) | | |
| DELPE-1215E | 4.5 m (15 ft) | | |
| DELPE-1225E | 7.6 m (25 ft) | | |
| DELPE-1250E | 15.2 m (50 ft) | | |
| DELPE-1275E | 22.8 m (75 ft) | | |
| DELPE-12100E | 30.4 m (100 ft) | | |

| QD pin | Color | Function |
|---|---|---|
| 1 | White | OSSD 2 |
| 2 | Brown | +24 V DC |
| 3 | Gn/Ye | Gnd/Chassis |
| 4 | Yellow | MD1 Input |
| 5 | Gray | MD2 Input |
| 6 | Pink | ME/OR2 |
| 7 | Blue | 0 V DC |
| 8 | Red | Aux/Fault Out |
| 9 | Orange | EDM Input |
| 10 | N.C. | N.C. |
| 11 | Black | OSSD 1 |
| 12 | Violet | Reset/OR1 |

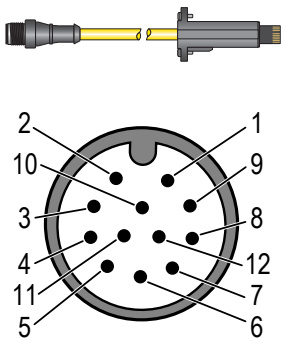


## 12.1.4 Male M12 to Female M12 QD Cordsets

*Table 12. 4-pin Threaded M12 Cordsets*

| Model | Length | Banner Cordset Pinout/Color Code | Connector (female face view) |
|---|---|---|---|
| MQDEC-406SS | 1.8 m (6 ft) | | |
| MQDEC-412SS | 3.6 m (12 ft) | | |
| MQDEC-420SS | 6.1 m (20 ft) | | |
| MQDEC-430SS | 9.2 m (30 ft) | | |
| MQDEC-450SS | 15.2 m (50 ft) | | |

| Pin | Color | Function |
|---|---|---|
| 1 | Brown | +24 V DC |
| 2 | White | PNP, D.O. |
| 3 | Blue | 0 V DC |
| 4 | Black | PNP, LO |

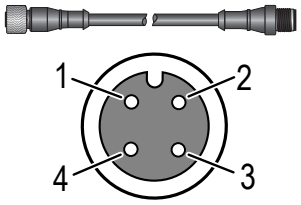


*Table 13. 5-pin Threaded M12 Cordsets*

| Model | Length | Banner Cordset Pinout/Color Code | Connector (female face view) |
|---|---|---|---|
| DEE2R-53D | 0.9 m (3 ft) | | |
| DEE2R-58D | 2.5 m (8 ft) | | |
| DEE2R-515D | 4.6 m (15 ft) | | |
| DEE2R-525D | 7.6 m (25 ft) | | |
| DEE2R-550D | 15.2 m (50 ft) | | |
| DEE2R-575D | 22.9 m (75 ft) | | |
| DEE2R-5100D | 30.5 m (100 ft) | | |

| Pin | Color | Function |
|---|---|---|
| 1 | Brown | +24 V DC |
| 2 | White | NPN |
| 3 | Blue | 0 V DC |
| 4 | Black | PNP |
| 5 | Gray | LO/DO Select |

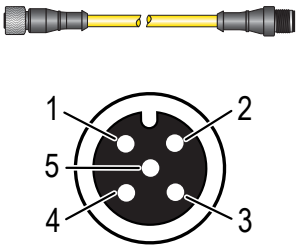



© Banner Engineering Corp. All rights reserved.
www.bannerengineering.com

*Table 14. 8-pin Threaded M12 Cordsets*

| Model | Length | Banner Cordset Pinout/Color Code | Connector (female face view) |
|---|---|---|---|
| **DEE2R-83D** | 0.9 m (3 ft) | | |
| **DEE2R-88D** | 2.5 m (8 ft) | | |
| **DEE2R-815D** | 4.6 m (15 ft) | | |
| **DEE2R-825D** | 7.6 m (25 ft) | | |
| **DEE2R-850D** | 15.2 m (50 ft) | | |
| **DEE2R-875D** | 22.9 m (75 ft) | | |
| **DEE2R-8100D** | 30.5 m (100 ft) | | |

| Pin | Color | Function |
|---|---|---|
| 1 | Brown | +24 V DC |
| 2 | Or/Bk | Fault |
| 3 | Orange | N.C. |
| 4 | White | N.C. |
| 5 | Black | N.C. |
| 6 | Blue | 0 V DC |
| 7 | Gn/Ye | Gnd/Chassis |
| 8 | Violet | Reset |

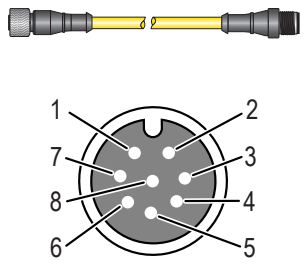


## 12.1.5 Muting Splitter Cordsets

The CSM Muting Splitter cordsets allow quick connection of M12 QD devices and flying lead cordsets. Four versions are available, two that include a branch for connection of the EZ-SCREEN LPM Emitter, and two that do not include the Emitter connection.

**WARNING:** Do not interchange **CSM3DO** and **CSM3LO**, or **CSM4DO** and **CSM4LO** cordsets. Ensure the correct cordset is installed by verifying the model number and performing a Commissioning Checkout as described in "Commissioning Checkout" on page 51. **Muting functionality can be effected resulting in inappropriate muting cycles, which could result in serious bodily injury or death**.

**NOTE:** Pins 4 and 5 (MD1 and MD2) are not connected on the 12-pin M12 male machine interface connection. See "12-pin M12 QD to RD Cordsets" on page 85 for additional pinout information.

**NOTE:** Typically Entry/Exit applications are Dark Operate (DO) with through-beam or polarized retroreflective sensors. Typically Home Position and Power Press applications are Light Operate (LO) or "closed switch to mute" applications. See "Entry/Exit Applications" on page 55, "Home or Station Applications" on page 58, and "Power Press Applications" on page 60 for examples.

| Models without Emitter Connection | Description | Branch 1 & 2 Termination | Branch 1 & 2 Pinout |
|---|---|---|---|
| **CSM3DO-M12121FM12121M** | For use with Banner sensors with Dark Operate PNP output | 5-pin M12 Female QD | |
| **CSM3LO-M12121FM12121M** | For use with Banner sensors with Light Operate PNP output | 5-pin M12 Female QD | |

| Pin | Function |
|---|---|
| 1 | +24 V DC (courtesy supply for sensor or hard contact) |
| 2 | Mute Input |
| 3 | 0 V DC |
| 4 | not connected |
| 5 | not connected |

| Pin | Function |
|---|---|
| 1 | +24 V DC (courtesy supply for sensor or hard contact) |
| 2 | not connected |
| 3 | 0 V DC |
| 4 | Mute Input |
| 5 | not connected |


© Banner Engineering Corp. All rights reserved.
www.bannerengineering.com

<table>
<tr><th>Models with Emitter Connection</th><th>Description</th><th>Branch 1 & 2 Termination</th><th>Branch 1 & 2 Pinout</th></tr>
<tr><td>CSM4DO-M12121FM12121M</td><td>For use with Banner sensors with Dark Operate PNP output</td><td>5-pin M12 Female QD</td><td><table><tr><th>Pin</th><th>Function</th></tr><tr><td>1</td><td>+24 V DC (courtesy supply for sensor or hard contact)</td></tr><tr><td>2</td><td>Mute Input</td></tr><tr><td>3</td><td>0 V DC</td></tr><tr><td>4</td><td>not connected</td></tr><tr><td>5</td><td>not connected</td></tr></table></td></tr>
<tr><td>CSM4LO-M12121FM12121M</td><td>For use with Banner sensors with Light Operate PNP output</td><td>5-pin M12 Female QD</td><td><table><tr><th>Pin</th><th>Function</th></tr><tr><td>1</td><td>+24 V DC (courtesy supply for sensor or hard contact)</td></tr><tr><td>2</td><td>not connected</td></tr><tr><td>3</td><td>0 V DC</td></tr><tr><td>4</td><td>Mute Input</td></tr><tr><td>5</td><td>not connected</td></tr></table></td></tr>
</table>


© Banner Engineering Corp. All rights reserved.
www.bannerengineering.com

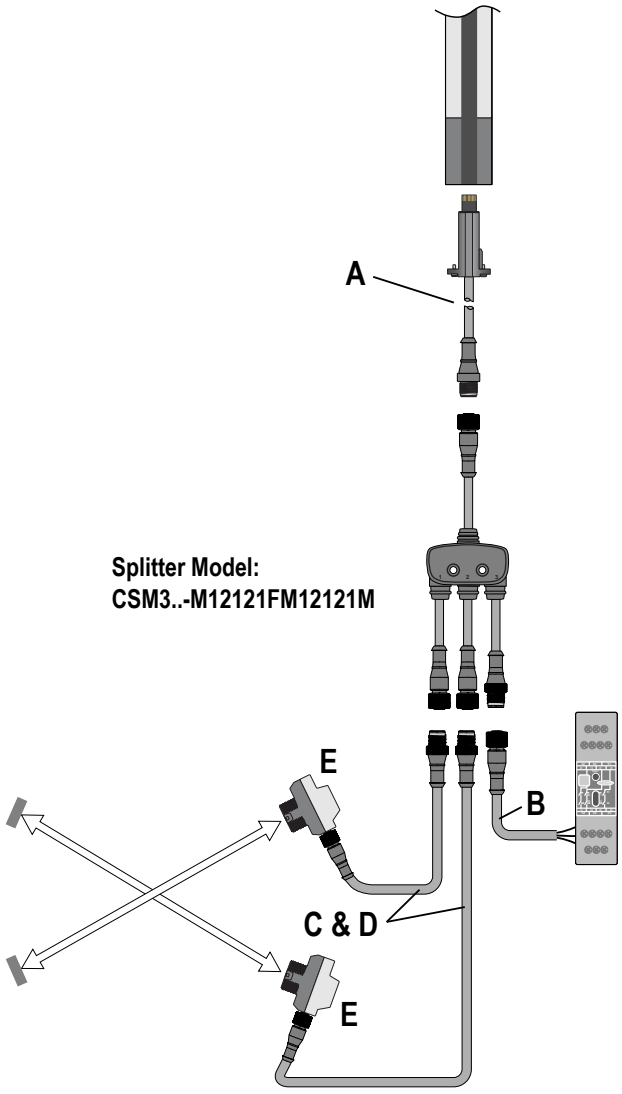


| Callout | Description |
|---|---|
| A | DELPE-12..E RD to 12-pin male QD for connection of SLPMR receivers (0.3 m DELPE-121E Factory installed on SLPMR...P12 models) |
| B | QDE-12..E 12-pin female QD with flying leads for machine interface hookup |
| C | MQDEC-4..SS Double-ended 4-pin male/female QD for mute device connection OR<br>DEE2R-5..D Double-ended 5-pin male/female QD for mute device connection |
| D | |
| E | QS18VP6LPQ8 (4-pin M12) sensors shown in figure. Other sensors or switches may be used |


© Banner Engineering Corp. All rights reserved.
www.bannerengineering.com

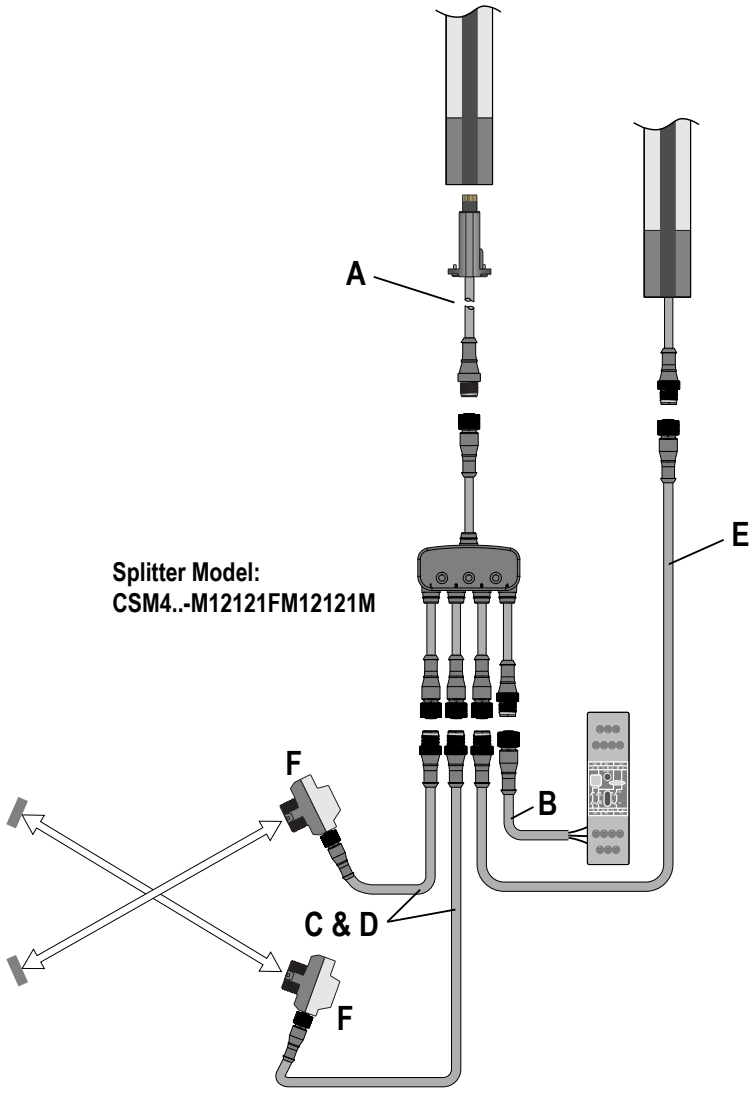


| Callout | Description |
|---|---|
| A | DELPE-12..E RD to 12-pin male QD for connection of SLPMR receivers (0.3 m DELPE-121E Factory installed on SLPMR...P12 models) |
| B | QDE-12..E 12-pin female QD with flying leads for machine interface connection |
| C | MQDEC-4..SS Double-ended 4-pin male/female QD for mute device connection OR DEE2R-5..D Double-ended 5-pin male/female QD for mute device connection |
| D | |
| E | DELPE-8..D or DEE2R-8..D Double-ended 8-pin male/female QD for extending branch 3 to the SLPE emitter |
| F | QS18VP6LPQ8 (4-pin M12) sensors shown in figure. Other sensors or switches may be used. |


© Banner Engineering Corp. All rights reserved.
www.bannerengineering.com

### 12.1.6 4 and 5-Pin M12 QD Cordsets

*Table 15. 4-Pin Cordsets*

| Model | Length | Banner Cordset Pinout/Color Code | M12 Connector (female face view) |
|---|---|---|---|
| **DELPEF-40D** | 0.05 m (2.4 in) | | |
| **DELPEF-41D** | 0.3 m (1 ft) | | |
| **DELPEF-43D** | 1 m (3.3 ft) | | |
| **DELPEF-48D** | 2.5 m (8.2 ft) | | |
| **DELPEF-415D** | 4.5 m (15 ft) | | |
| **DELPEF-425D** | 7.6 m (25 ft) | | |
| **DELPEF-450D** | 15.2 m (50 ft) | | |
| **DELPEF-475D** | 22.8 m (75 ft) | | |
| **DELPEF-4100D** | 30.4 m (100 ft) | | |

| QD pin | Function |
|---|---|
| 1 | N.C. |
| 2 | N.C. |
| 3 | 0 V DC |
| 4 | Mute Status |

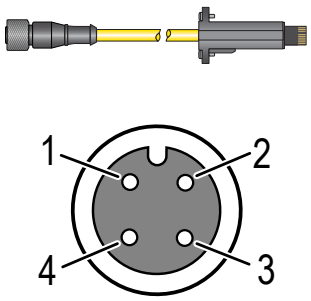


*Table 16. 5-Pin Cordsets*

| Model | Length | Banner Cordset Pinout/Color Code | M12 Connector (female face view) |
|---|---|---|---|
| **DELPEF-50D** | 0.05 m (2.4 in) | | |
| **DELPEF-51D** | 0.3 m (1 ft) | | |
| **DELPEF-53D** | 1 m (3.3 ft) | | |
| **DELPEF-58D** | 2.5 m (8.2 ft) | | |
| **DELPEF-515D** | 4.5 m (15 ft) | | |
| **DELPEF-525D** | 7.6 m (25 ft) | | |
| **DELPEF-550D** | 15.2 m (50 ft) | | |
| **DELPEF-575D** | 22.8 m (75 ft) | | |
| **DELPEF-5100D** | 30.4 m (100 ft) | | |

| QD pin | Function |
|---|---|
| 1 | Reset Status |
| 2 | OSSDs Off |
| 3 | 0 V DC |
| 4 | OSSDs On |
| 5 | Mute Status |

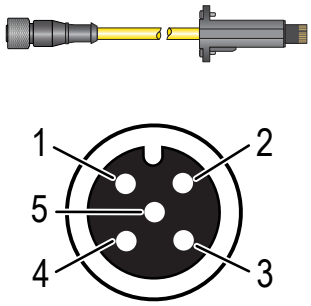


## 12.2 Interface Modules

Interface modules provide forced-guided, mechanically-linked relay (safety) outputs for the EZ-SCREEN LPM System See the referenced Banner datasheets for more information.

| Model | Description | Datasheet |
|---|---|---|
| **IM-T-9A** | Interface module, 3 normally open (N.O.) redundant-output 6 amp contacts, removable screw terminals | 62822 |
| **IM-T-11A** | Interface module, 2 normally open (N.O.) redundant-output 6 amp contacts, plus 1 normally closed (N.C.) auxiliary contact, removable screw terminals | |
| **SR-IM-9A** | Interface module, 3 normally open (N.O.) redundant-output 6 amp contacts, spring clamp terminals | 208873 |
| **SR-IM-11A** | Interface module, 2 normally open (N.O.) redundant-output 6 amp contacts, plus 1 normally closed (N.C.) auxiliary contact, spring clamp terminals | |

## 12.3 Contactors

The normally closed contacts are used in an external device monitoring (EDM) circuit. If used, two contactors per EZ-SCREEN LPM System are required. See datasheet p/n 111881 for additional options and more information.

| Model | Description |
|---|---|
| **11-BG00-31-D-024** | 10 amp positive-guided contactor, 3 normally open (N.O.) and 1 normally closed (N.C.) |
| **BF1801L024** | 18 amp positive-guided contactor, 3 normally open (N.O.) and 1 normally closed (N.C.) (N.C. contact rated at 10 amps) |


© Banner Engineering Corp. All rights reserved.
www.bannerengineering.com

## 12.4 Safety Controllers

Safety Controllers provide a fully configurable, software-based safety logic solution for monitoring safety and non-safety devices.

For additional models and XS26 expansion modules, see instruction manual p/n 174868.

*Table 17. Safety controller models*

| Non-Expandable Models | Expandable Models | Description |
|---|---|---|
| **SC26-2** | **XS26-2** | 26 convertible I/O and 2 redundant solid-state safety outputs |
| **SC26-2d** | **XS26-2d** | 26 convertible I/O and 2 redundant solid-state safety outputs with display |
| **SC26-2e** | **XS26-2e** | 26 convertible I/O and 2 redundant solid-state safety outputs with Ethernet |
| **SC26-2de** | **XS26-2de** | 26 convertible I/O and 2 redundant solid-state safety outputs with display and Ethernet |
| **SC10-2roe** | | 10 inputs, 2 redundant relay safety outputs (3 contacts each) (ISD and Ethernet compatible) |
| | **XS26-ISDd** | 26 inputs, 2 redundant solid-state safety outputs with display, Ethernet, and 8 ISD channels |

## 12.5 External Keyed Reset Switches

| Model | Description |
|---|---|
| **EZA-RR-1** | External normally open reset switch with 8-pin M12 QD; can be interconnected using cordset models QDE-8..D, DEE2R-8..D, or CSB-..M1281. |
| **MGA-KSO-1** | Panel-mount keyed normally open reset switch |
| **MGA-K-1** | Replacement key for switch MGA-KSO-1 |

## 12.6 Snap-On Lens Shields

Impact-resistant copolyester lens shields snap easily over the entire length of the sensor housing, protecting against metal-cutting fluids and other chemicals. The lens shields are not sealed at the top and bottom and decrease the sensing range by approximately 15% when they are protecting both the emitter and receiver. Order one per sensor.

| Sensor Model | Lens Shield Model | |
|---|---|---|
| SLP..-270..* | LPSS-270 |  |
| SLP..-410.. | LPSS-410 | |
| SLP..-550.. | LPSS-550 | |
| SLP..-690.. | LPSS-690 | |
| SLP..-830.. | LPSS-830 | |
| SLP..-970.. | LPSS-970 | |
| SLP..-1110.. | LPSS-1110 | |
| SLP..-1250.. | LPSS-1250 | |

* Not available in Muting.


© Banner Engineering Corp. All rights reserved.
www.bannerengineering.com

# 12.7 EZ-LIGHT® for EZ-SCREEN® Low Profile with Muting

| Models | | Construction | Connection/ Recommended Cordset(14) | LED Function |
|---|---|---|---|---|
|  | **TL50WQ***, **TL50YQ*** | • Bases and Covers: ABS<br>• Light Seg.: Polycarbonate<br>• 30 mm base mount<br>• IP67<br>• Indicates Mute Status | DELPEF-4xxD | White<br>Yellow |
|  | **K50LWXXPQ***, **K50LYXXPQ*** | • Polycarbonate housing, 50 mm thermoplastic dome, 30 mm base mount<br>• Fully encapsulated, IP67<br>• Indicates Mute Status | | White<br>Yellow |
|  | **K50FLWXXPQPMA***, **K50FLYXXPQPMA** | • Polycarbonate base, translucent polycarbonate dome, flat mount.<br>• Fully encapsulated, IP67, IP69K<br>• Indicates Mute Status | | White<br>Yellow |
|  | **K80LWXXPQPMA**, **K80LYXXPQPMA** | • Polycarbonate housing, 50 mm thermoplastic dome, flat or DIN mount<br>• Fully encapsulated, IP67<br>• Indicates Mute Status | | White<br>Yellow |
|  | **K50LGRW2PQ-18886*** | • Polycarbonate housing, 50 mm thermoplastic dome, 30 mm base mount<br>• Fully encapsulated, IP67<br>• Indicates Mute Status | DELPEF-5xxD | 3-color dome light (Green, Red, White) |
|  | **TL50GYRWQ*** | • Bases and Covers: ABS<br>• Light Seg.: Polycarbonate<br>• 30 mm base mount<br>• IP67<br>• Indicates Mute Status | | 4-color tower light (Green, Yellow, Red, White) |

* Can be used with LPA-MBK-15 mounting bracket.

# 12.8 MSA Series Stands

- Provides mounting T-slots with 20 mm dimension between slots
- Base included. Available without a base by adding the suffix **NB** to the model number (for example, **MSA-S42-1NB**)

| Stand Model | Pole Height | Useable Stand Height | Overall Stand Height | |
|---|---|---|---|---|
| **MSA-S24-1** | 610 mm (24 in) | 483 mm (19 in) | 616 mm (24.25 in) | 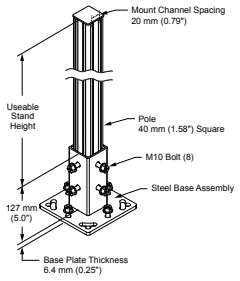 |
| **MSA-S42-1** | 1065 mm (42 in) | 938 mm (37 in) | 1071 mm (42.2 in) | |
| **MSA-S66-1** | 1676 mm (66 in) | 1549 mm (61 in) | 1682 mm (66.25 in) | |
| **MSA-S84-1** | 2134 mm (84 in) | 2007 mm (79 in) | 2140 mm (84.25 in) | |
| **MSA-S105-1** | 2667 mm (105 in) | 2540 mm (100 in) | 2673 mm (105.25 in) | |



(14) See "4 and 5-Pin M12 QD Cordsets" on page 90 for cordset information


© Banner Engineering Corp. All rights reserved.
www.bannerengineering.com

# 12.9 MSM Series Corner Mirrors

- Compact for light-duty applications
- Rear-surface glass mirrors are rated at 85% efficiency. The total sensing range decreases by approximately 8% per mirror. See the MSM Series Corner Mirror datasheet (p/n 43685) or www.bannerengineering.com for further information.
- Mounting brackets may be inverted from the positions shown (flanges pointing "inward" instead of "outward," as shown). When this is done, dimension L1 decreases by 57 mm.
- MSAMB adapter bracket kit included with each MSA stand.

| Mirror Model | Part Number | Reflective Area Length (Y) | Mounting Length (L1) | Mirror Height Overall (L2) | |
|---|---|---|---|---|---|
| **MSM4A** | 43162 | 165 mm (6.5 in) | 221 mm (8.7 in) | 191 mm (7.5 in) | 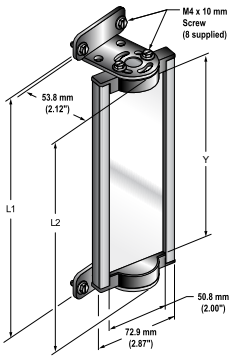 |
| **MSM8A** | 43163 | 267 mm (10.5 in) | 323 mm (12.7 in) | 292 mm (11.5 in) | |
| **MSM12A** | 43164 | 356 mm (14 in) | 411 mm (16.2 in) | 381 mm (15 in) | |
| **MSM16A** | 43165 | 457 mm (18 in) | 513 mm (20.2 in) | 483 mm (19 in) | |
| **MSM20A** | 43166 | 559 mm (22 in) | 615 mm (24.2 in) | 584 mm (23 in) | |
| **MSM24A** | 43167 | 660 mm (26 in) | 716 mm (28.2 in) | 686 mm (27 in) | |
| **MSM28A** | 43168 | 762 mm (30 in) | 818 mm (32.2 in) | 787 mm (31 in) | |
| **MSM32A** | 43169 | 864 mm (34 in) | 919 mm (36.2 in) | 889 mm (35 in) | |
| **MSM36A** | 43170 | 965 mm (38 in) | 1021 mm (40.2 in) | 991 mm (39 in) | |
| **MSM40A** | 43171 | 1067 mm (42 in) | 1123 mm (44.2 in) | 1092 mm (43 in) | |
| **MSM44A** | 43172 | 1168 mm (46 in) | 1224 mm (48.2 in) | 1194 mm (47 in) | |
| **MSM48A** | 43173 | 1270 mm (50 in) | 1326 mm (52.2 in) | 1295 mm (51 in) | |



| MSM Model | Light Curtain Series | | | | |
|---|---|---|---|---|---|
| | SLS Defined Area | S4B Defined Area | LP Defined Area | LS Defined Area | Type 2 Defined Area |
| **MSM4A** | | | | | |
| **MSM8A** | 150 | | | | 150 |
| **MSM12A** | 300 | 300 | 270 | 280 | 300 |
| **MSM16A** | | | 410 | 350 | |
| **MSM20A** | 450 | 450 | | 490 | 450 |
| **MSM24A** | 600 | 600 | 550 | 560 | 600 |
| **MSM28A** | | | 690 | 630/700 | |
| **MSM32A** | 750 | 750 | | 770 | 750 |
| **MSM36A** | 900 | 900 | 830 | 840/910 | 900 |
| **MSM40A** | | | 970 | 980 | |
| **MSM44A** | 1050 | 1050 | 1110 | 1050/1120 | 1050 |
| **MSM48A** | 1200 | 1200 | | 1190 | 1200 |

# 12.10 SSM Series Corner Mirrors

- Robust for heavy-duty applications.
- Extra wide for use with long-range optical safety systems.
- Rear-surface glass mirrors are rated at 85% efficiency. The total sensing range decreases by approximately 8% per mirror. See mirror datasheet p/n 61934 or www.bannerengineering.com for further information.
- To order the stainless steel reflective surface models, add the suffix **-S** (for example, **SSM-375-S**); range reduction for these models is approximately 30% per mirror. See datasheet p/n 67200.
- Robust construction, two mounting brackets and hardware included.
- In addition to the included SMA-MBK-1 brackets, an EZA-MBK-2 adapter bracket kit is required for use with MSA Series stands; refer to the mounting bracket accessories list.
- Brackets may be inverted from the positions shown, decreasing dimension L1 by 58 mm (2.3 in).


© Banner Engineering Corp. All rights reserved.
www.bannerengineering.com

| Mirror Model | Reflective Area Length (Y) | Mounting Height (L1)[15] | Overall Height (L2) | Max. Light Screen Defined Area Height |
|---|---|---|---|---|
| **SSM-100** | 100 mm (3.9 in) | 211 mm (8.3 in) | 178 mm (7.0 in) | 50 mm (1.9 in) |
| **SSM-200** | 200 mm (7.9 in) | 311 mm (12.2 in) | 278 mm (10.9 in) | 150 mm (5.9 in) |
| **SSM-375** | 375 mm (14.8 in) | 486 mm (19.1 in) | 453 mm (17.8 in) | 325 mm (12.8 in) |
| **SSM-475** | 475 mm (18.7 in) | 586 mm (23.1 in) | 553 mm (21.8 in) | 425 mm (16.7 in) |
| **SSM-550** | 550 mm (21.7 in) | 661 mm (26.0 in) | 628 mm (24.7 in) | 500 mm (19.7 in) |
| **SSM-675** | 675 mm (26.6 in) | 786 mm (31.0 in) | 753 mm (29.6 in) | 625 mm (24.6 in) |
| **SSM-825** | 825 mm (32.5 in) | 936 mm (36.9 in) | 903 mm (35.6 in) | 775 mm (30.5 in) |
| **SSM-875** | 875 mm (34.4 in) | 986 mm (38.8 in) | 953 mm (37.5 in) | 825 mm (32.5 in) |
| **SSM-975** | 975 mm (38.4 in) | 1086 mm (42.8 in) | 1053 mm (41.5 in) | 925 mm (36.4 in) |
| **SSM-1100** | 1100 mm (43.3 in) | 1211 mm (47.7 in) | 1178 mm (46.4 in) | 1050 mm (41.3 in) |
| **SSM-1175** | 1175 mm (46.3 in) | 1286 mm (50.6 in) | 1253 mm (49.3 in) | 1125 mm (44.3 in) |
| **SSM-1275** | 1275 mm (50.2 in) | 1386 mm (54.6 in) | 1353 mm (53.3 in) | 1225 mm (48.2 in) |
| **SSM-1400** | 1400 mm (55.1 in) | 1511 mm (59.5 in) | 1478 mm (58.2 in) | 1350 mm (53.1 in) |
| **SSM-1475** | 1475 mm (58.1 in) | 1586 mm (62.5 in) | 1553 mm (61.1 in) | 1425 mm (56.1 in) |
| **SSM-1550** | 1550 mm (61.0 in) | 1661 mm (65.4 in) | 1628 mm (64.1 in) | 1500 mm (59.1 in) |
| **SSM-1675** | 1675 mm (65.9 in) | 1786 mm (70.3 in) | 1753 mm (69.0 in) | 1625 mm (63.9 in) |
| **SSM-1750** | 1750 mm (68.9 in) | 1861 mm (73.3 in) | 1828 mm (72.0 in) | 1700 mm (66.9 in) |
| **SSM-1900** | 1900 mm (74.8 in) | 2011 mm (79.2 in) | 1978 mm (77.9 in) | 1850 mm (72.8 in) |

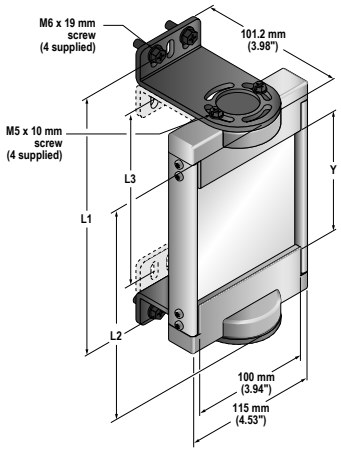


| SSM Models | Light Curtain Series | | | | | |
|---|---|---|---|---|---|---|
| | SLS | S4B | LP | LS | Type 2 | SGS |
| **SSM-100** | | | | | | |
| **SSM-200** | 150 | | | | 150 | |
| **SSM-375** | 300 | 300 | 270 | 280 | 300 | |
| **SSM-475** | | | 410 | 350/420 | | |
| **SSM-550** | 450 | 450 | | 490 | 450 | 2–500 |
| **SSM-675** | 600 | 600 | 550 | 560/630 | 600 | |
| **SSM-825** | 750 | 750 | 690 | 700/770 | 750 | |
| **SSM-875** | | | 830 | 840 | | 3–400 |
| **SSM-975** | 900 | 900 | | 910 | 900 | 4–300 |
| **SSM-1100** | 1050 | 1050 | 970 | 980/1050 | 1050 | |
| **SSM-1175** | | | 1110 | 1120 | | |
| **SSM-1275** | 1200 | 1200 | | 1190 | 1200 | 4–400 |
| **SSM-1400** | 1350 | 1350 | 1250 | 1260/1330 | 1350 | |
| **SSM-1475** | | | 1390 | 1400 | | |
| **SSM-1550** | 1500 | 1500 | | 1470 | 1500 | |
| **SSM-1675** | | | 1530 | 1540/1610 | | |
| **SSM-1750** | 1650 | 1650 | 1670 | 1680 | | |
| **SSM-1900** | 1800 | 1800 | 1810 | 1750/1820 | | |

# 12.11 Accessory Mounting Brackets

Contact Banner Engineering for more information. Order one LPA-MBK-.. bracket per sensor, two per pair.

[15] The mounting brackets may be inverted from the positions shown at left (flanges pointing “inward” instead of “outward,” as shown). When this is done, dimension L1 decreases by 58 mm (2.3 inches).


© Banner Engineering Corp. All rights reserved.
www.bannerengineering.com

| Model | Description | |
|---|---|---|
| **LPA-MBK-10** | • End-mount bracket<br>• 14 ga (1.9 mm) steel, black zinc plated<br>• Includes two brackets and hardware |  |
| **LPA-MBK-13** | • Adaptor for side-mount bracket LPA-MBK-12<br>• Reorients sensor rotation by 90° (+10°/ −30°)<br>• 14 ga (1.9 mm) steel, black zinc plated<br>• Includes 1 bracket and hardware |  |
| **LPA-MBK-16** | • Side-mounting bracket provides a mounting option that is fully adjustable (lateral and +15/-20° rotational) from the face of the sensor and allows "no blind zone" mounting with minimal or no "gaps" in detection<br>• Zinc diecast<br>• Includes 1 bracket and hardware |  |
| **LPA-MBK-20** | • Universal adapter bracket for mounting to engineered/slotted aluminum framing (for example, 80/20™, Bosch)<br>• Retrofit for Banner MS/US/MG; clearance for M4 and M6 hardware<br>• Use with LPA-MBK-11, -12, or -13<br>• 12 ga (2.66 mm) steel, black zinc plated<br>• Includes 1 bracket and hardware |  |
| **LPA-MBK-22** | • End-cap bracket for mounting sensor inside Unistrut® metal framing; uses end-cap plates from bracket LPA-MBK-11<br>• Fits Unistrut P1000 size, with M6 or 1/4" channel nuts<br>• 14 ga (1.90 mm) steel, black zinc plated; diecast zinc clamps<br>• Includes 2 brackets and hardware |  |
| **LPA-MBK-Pxxx** | • L-shaped bracket for one emitter or receiver protects sensor from weld flash, impact.<br>• Sized to match sensor length; replace “xxx” in model number with sensor size (for example, LPAMBK- P270 for use with sensor SLP..-270..); bracket studs mate with side-mount brackets LPA-MBK-12, included with sensor. Corner notch accommodates cable routing.<br>• +10°/ −30° sensor rotation<br>• 12 ga (2.66 mm) steel, black zinc plated or painted<br>• Includes 1 bracket and hardware |  |


© Banner Engineering Corp. All rights reserved.
www.bannerengineering.com

# 12.12 Alignment Aids

| Model | Description | |
|---|---|---|
| **LAT-1-LP** | Self-contained visible-beam laser tool for aligning any EZ-SCREEN LPM emitter/receiver pair. Includes retroreflective target material and mounting clip. |  |
| **LPA-LAT-2** | Replacement adaptor (clip) hardware for EZ-SCREEN LPM models | |
| **LPA-LAT-1** | Clip-on retroreflective LAT target | |
| **BRT-THG-2-100** | Two-inch retroreflective tape, 100 ft | |
| **BT-1** | Beam Tracker | |


© Banner Engineering Corp. All rights reserved.

Chapter Contents

13.1 Clean Components with Mild Detergent ..... 97
13.2 Replacement Parts ..... 97
13.3 Warranty Service ..... 97
13.4 Disposal ..... 98
13.5 Manufacturing Date ..... 98
13.6 Contact Us ..... 98
13.7 Banner Engineering Corp Limited Warranty ..... 98

# Chapter 13 Product Support and Maintenance

## 13.1 Clean Components with Mild Detergent

Emitters and receivers are best cleaned using mild detergent or window cleaner and a soft cloth. Avoid cleaners containing alcohol, as they may damage the acrylic lens covers.

## 13.2 Replacement Parts

| Model | Description |
|---|---|
| **STP-13** | 14 mm test piece (14 mm resolution systems) |
| **STP-17** | 34 mm test piece (14 mm resolution systems with 2-beam reduced resolution) |
| **STP-16** | 25 mm test piece (25 mm resolution systems) |
| **STP-18** | 65 mm test piece (25 mm resolution systems with 2-beam reduced resolution) |
| **DELPE-81D** | Replacement for M12-terminated pigtail QD, as shipped with standard pigtail QD models; 8-conductor cable, 22 AWG; 0.3 m (1 in) long; see "Cordsets" on page 83 for other lengths |
| **LPA-MBK-11** | End-cap bracket kit (includes 2 end brackets and hardware); 360º sensor rotation; 14 ga (1.9 mm) steel, black zinc plated; die-cast zinc end-cap plate |
| **LPA-MBK-12** | Side-mount bracket kit (includes 1 bracket and hardware); +10º/-30º sensor rotation; 14 ga (1.9 mm) steel, black zinc plated; die-cast zinc clamp |

**LPA-MBK-11** End-cap bracket

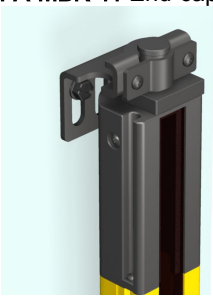

**LPA-MBK-12** Side-mount bracket

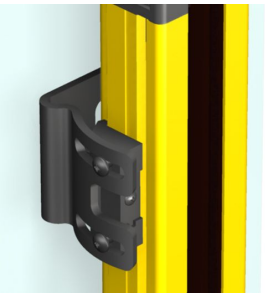

## 13.3 Warranty Service

Contact Banner Engineering for troubleshooting of this device. **Do not attempt any repairs to this Banner device; it contains no field-replaceable parts or components.** If the device, device part, or device component is determined to be defective by a Banner Applications Engineer, they will advise you of Banner's RMA (Return Merchandise Authorization) procedure.

**IMPORTANT:** If instructed to return the device, pack it with care. Damage that occurs in return shipping is not covered by warranty.


© Banner Engineering Corp. All rights reserved.
www.bannerengineering.com

## 13.4 Disposal

Devices that are no longer in use should be disposed of according to the applicable national and local regulations.

## 13.5 Manufacturing Date

Every EZ-SCREEN LPM produced is marked with a code that defines the week and year of manufacture and manufacturing location. The code format (U.S. Standard format) is: **YYWWL**

- YY = Year of manufacture, 2 digits
- WW = Week of manufacture, 2 digits
- L = Banner-specific code, 1 digit

**Example**: 2309H = 2023, Week 9.

## 13.6 Contact Us

Banner Engineering Corp. | 9714 Tenth Avenue North | Plymouth, MN 55441, USA | Phone: + 1 888 373 6767

For worldwide locations and local representatives, visit www.bannerengineering.com.

## 13.7 Banner Engineering Corp Limited Warranty

Banner Engineering Corp. warrants its products to be free from defects in material and workmanship for one year following the date of shipment. Banner Engineering Corp. will repair or replace, free of charge, any product of its manufacture which, at the time it is returned to the factory, is found to have been defective during the warranty period. This warranty does not cover damage or liability for misuse, abuse, or the improper application or installation of the Banner product.

**THIS LIMITED WARRANTY IS EXCLUSIVE AND IN LIEU OF ALL OTHER WARRANTIES WHETHER EXPRESS OR IMPLIED (INCLUDING, WITHOUT LIMITATION, ANY WARRANTY OF MERCHANTABILITY OR FITNESS FOR A PARTICULAR PURPOSE), AND WHETHER ARISING UNDER COURSE OF PERFORMANCE, COURSE OF DEALING OR TRADE USAGE.**

This Warranty is exclusive and limited to repair or, at the discretion of Banner Engineering Corp., replacement. **IN NO EVENT SHALL BANNER ENGINEERING CORP. BE LIABLE TO BUYER OR ANY OTHER PERSON OR ENTITY FOR ANY EXTRA COSTS, EXPENSES, LOSSES, LOSS OF PROFITS, OR ANY INCIDENTAL, CONSEQUENTIAL OR SPECIAL DAMAGES RESULTING FROM ANY PRODUCT DEFECT OR FROM THE USE OR INABILITY TO USE THE PRODUCT, WHETHER ARISING IN CONTRACT OR WARRANTY, STATUTE, TORT, STRICT LIABILITY, NEGLIGENCE, OR OTHERWISE.**

Banner Engineering Corp. reserves the right to change, modify or improve the design of the product without assuming any obligations or liabilities relating to any product previously manufactured by Banner Engineering Corp. Any misuse, abuse, or improper application or installation of this product or use of the product for personal protection applications when the product is identified as not intended for such purposes will void the product warranty. Any modifications to this product without prior express approval by Banner Engineering Corp will void the product warranties. All specifications published in this document are subject to change; Banner reserves the right to modify product specifications or update documentation at any time. Specifications and product information in English supersede that which is provided in any other language. For the most recent version of any documentation, refer to: www.bannerengineering.com.

For patent information, see www.bannerengineering.com/patents.


© Banner Engineering Corp. All rights reserved.

# Index


## A

accessories
  alignment aids 96
  safety controller 91
adjacent reflective surfaces 25
alignment aids
  accessories 96
alignment, mechanical 32
applications
  inappropriate 10
  suitable 9
applications and limitation 9
apply power
  latch 73
  system power-up 73
  trip 73
auxiliary output 66

## B

blanking
  fixed 41
  floating 40
brackets
  assembly instructions 31
  end mount 30
  side mount 31

## C

calculating safety (minimum) distance 19
checkout
  commissioning 51
  configuring for initial 36
  initial 36
  periodic 75
  schedule of 75
configure
  fixed blanking 41
control reliability 10
cordset
  emitter 35
  maximum length 35
  receiver 35
cordsets
  routing 34
corner mirrors 26
crosstalk
  scan code 28

## D

dimensions 16
DIP Switches 13
display 66
dual-channel control 45

## E

EDM 45, 46
electrical connections 43
electrical noise 81
emitter
  orientation 27
emitter error codes 79
emitter fault 66
emitter status indicators 72
emitter wiring 47
error codes
  emitter 79
external device monitoring 45, 46
External Device Monitoring (EDM) 13

## F

Final Switching Device (FSD) 11
final switching devices 44
fixed blanking 41
fixed blanking
  configure 41
floating blanking 40
FSD 44

## H

hazards
  reducing 22

## I

initial electrical connections 35
initial power-up 36
installation
  electrical 34
  mechanical 19
internal faults 74
inverted display 66

## L

latch output 66, 73, 74
lockout conditions 77



© Banner Engineering Corp. All rights reserved.
www.bannerengineering.com

lockouts 74

## M

machine primary control elements 45
Machine Primary Control Elements (MPCEs) 11
mechanical alignment 32
minimum distance 19
mirrors
  optical alignment 38
MPCE 45
MSM corner mirrors 93
multiple systems 28
mute sensor 62
mute switch 62
muting device requirements 61

## N

noise
  electrical and optical 81

## O

optical alignment with mirrors 38
optical noise 81
orientation 27
OSSD 44
output signal switching device 44
Output Signal Switching Device (OSSD) 11

## P

power
  system 73
protective stop circuit 45

## R

receiver
  orientation 27
receiver status indicators 72
reduced resolution 66, 40
reflective surfaces 25
requirements
  muting device 61
reset procedure 78
reset routine 78
reset switch location 24, 78
routing cordsets 34
run mode 74

## S

safety controller 91
safety distance 19
safety distance formula 20
safety stop circuit 45
scan code 66
single-channel control 45
specifications 14
status indicators
  emitter 72
  receiver 72
suitable applications 9
supplemental safeguarding 23
system configuration settings 66

## T

test mode 81
test/reset 66
Trip or Latch Output 13
trip output 66, 73, 74
trip test 42
trip/latch output 70
troubleshooting
  error codes 79
  lockout conditions 77

## W

wiring
  emitter 47


© Banner Engineering Corp. All rights reserved.
www.bannerengineering.com

# Glossary

### ANSI

The American National Standards Institute (ANSI) is an association of industry representatives that develops technical standards (including safety standards). These standards comprise a consensus from a variety of industries on good practice and design. ANSI standards relevant to the application of safety products include the ANSI B11 Series, and ANSI/RIA R15.06.

### auto start/restart (trip) condition

An auto start/restart condition is when the safety outputs of a safety light curtain system turn off after an object completely blocks a beam and re-energize when the object is removed from the defined area.

### control reliability

Control reliability is a method of ensuring the performance integrity of a control system or device. Control circuits are designed and constructed so that a single failure or fault within the system does not prevent the normal stopping action from being applied to the machine when required, or does not create unintended machine action, but does prevent initiation of successive machine action until the failure is corrected.

### defined area

The defined area is the "screen of light" generated by a safety light curtain system that is defined by the height and the safety distance (minimum distance) of the system.

### Designated Person

A Designated Person is a person or persons identified and designated in writing, by the employer, as being appropriately trained and qualified to perform a specified checkout procedure.

### dual-channel

A dual-channel device or configuration has redundant signal lines for each safety input or safety output.

### emitter

light curtain The light curtain's emitter is the light-emitting component of a safety light curtain system, consisting of a row of synchronized modulated LEDs. The emitter, together with the receiver (placed opposite), creates a "screen of light" called the defined area.

### external device monitoring

External device monitoring (EDM) is a means by which a safety device (such as a safety light curtain) actively monitors the state (or status) of external devices that are controlled by the safety device. A lockout of the safety device will result if an unsafe state is detected in the external device. External device(s) may include, but are not limited to: MPCEs, captive contact relays/contactors, and safety modules.

### final switching device

A final switching device (FSD) is the component of the machine’s safety-related control system that interrupts the circuit to the machine primary control element (MPCE) when the output signal switching device (OSSD) goes to the OFF-state.

### guarded machine

A guarded machine is the machine whose point of operation is guarded by the safety system.

### hard (fixed) guard

Hard (fixed) guards are screens, bars, or other mechanical barriers affixed to the frame of the machine intended to prevent entry by personnel into the hazardous area(s) of a machine, while allowing the point of operation to be viewed. The maximum size of the openings is determined by the applicable standard, such as Table O-10 of OSHA 29CFR1910.217, also called a "fixed barrier guard."


© Banner Engineering Corp. All rights reserved.

### hazard point

A hazard point is the closest reachable point of the hazardous area.

### hazardous area

The hazardous area is an area that poses an immediate or impending physical hazard.

### key reset (manual reset)

A key reset is a key-operated switch used to reset a safety light curtain system to Run mode following a lockout condition, or to enable machine operation following a manual start/restart (latch) condition. Key reset also refers to the act of using the key-operated switch.

### lockout condition

A lockout condition is a safety light curtain condition that is automatically attained in response to certain failure signals. When a lockout condition occurs, the safety light curtain's safety outputs turn off; the failure must be corrected and a manual reset is required to return the system to run mode.

### machine primary control element

A machine primary control element (MPCE) is an electrically powered element, external to the safety system, that directly controls the machine's normal operating motion in such a way that the element is last (in time) to operate when the machine motion is either initiated or arrested.

### manual start/restart (latch)

Manual start/restart (latch) is when the safety outputs of a safety light curtain system turn off when an object completely blocks a beam. In a manual start/restart condition, the safety outputs stay off when the object is removed from the defined area. To re-energize the outputs, perform a proper manual reset.

### OSHA

The Occupational Safety and Health Administration (OSHA) is a U.S. Federal agency and division of the U.S. Department of Labor responsible for the regulation of workplace safety.

### output signal switching device

The output signal switching devices (OSSD) are the safety outputs that are used to initiate a stop signal.

### part-revolution clutch

A part-revolution clutch is a type of clutch that may be engaged or disengaged during the machine cycle. Part-revolution clutched machines use a clutch/brake mechanism, which can arrest machine motion at any point in the stroke or cycle.

### pass-through hazard

A pass-through hazard is associated with applications where personnel may pass through a safeguard (which issues a stop command to remove the hazard), and then continues into the guarded area, such as in perimeter guarding. Subsequently, their presence is no longer detected, and the related danger becomes the unexpected start or restart of the machine while personnel are within the guarded area.

### point-of-operation guarding

Point-of-operation guarding are safeguards, such as hard guards or safety light curtains, that are designed to protect personnel from hazardous machine motion when close to the machine's point of operation.

### Qualified Person

A Qualified Person is a person who, by possession of a recognized degree or certificate of professional training, or who, by extensive knowledge, training and experience, has successfully demonstrated the ability to solve problems relating to the subject matter and work.


© Banner Engineering Corp. All rights reserved.

### receiver

light curtains The receiver is the light-receiving component of a safety light curtain system and consists of a row of synchronized phototransistors. The receiver, together with the emitter (placed opposite), creates a "screen of light" called the defined area.

### reset

A reset refers to the use of a manually operated switch to restore the safety outputs to the ON state from a lockout or a manual start/restart (latch) condition.

### safety distance

The safety distance is the minimum distance an engineered control (guard or device) is installed from a hazard such that individuals cannot reach the hazard point before it is stopped (or made safe). The safety distance required for an application depends on several factors, including the speed of the hand (or individual or object), the total system stopping time (which includes several response time components), and the depth penetration factor. Refer to the relevant standard to determine the appropriate distance or means to ensure that individuals cannot be exposed to the hazard(s).

### single-channel

Single-channel refers to having only one signal line for a safety input or safety output.

### supplemental guarding

Supplemental guarding is additional safeguarding device(s) or hard guarding, used to prevent a person from reaching over, under, through or around the primary safeguard or otherwise accessing the guarded hazard.


© Banner Engineering Corp. All rights reserved.

LinkedIn

X

Facebook

Instagram




© 2026. All rights reserved.