SMBARP Series Andon Rope Pull Bracket

Datasheet

Robust mechanical brackets for use in visual management systems for individual and team interaction with the manufacturing process

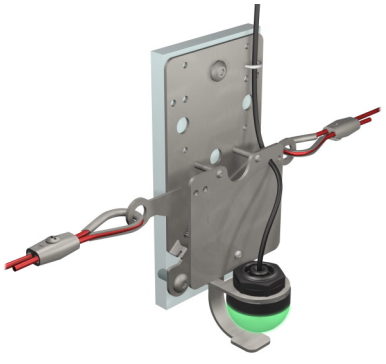

- Common bracket solution for both: vertical rope pulls - typically on assembly lines and horizontal rope pulls - typically on operator stations and lean cells
- Bracket uses standard K50 device for self contained light and switch functions
- K50 color and function available with various options
- K50 models with high visibility LEDs suitable for factory lighting conditions
- Uses inlcude: ANDON for Temporary Line Stop, Maintenance Call, or Material Call
- Flexible mounting options, including mounting to uni-strut
- Remote actuation types also available

WARNING: Not To Be Used for Personnel Protection

Never use this device as a sensing device for personnel protection. Doing so could lead to serious injury or death. This device does not include the self-checking redundant circuitry necessary to allow its use in personnel safety applications. A sensor failure or malfunction can cause either an energized or de-energized sensor output condition.

Models

Model	Pull Direction	Supply Voltage	Output Type	Indicator Light Colors
SMBARPL30	Left Side	Specify when ordering the K50 EZ Light with optical fixed field sensor: Typical model number: K50APFF50GRCQP		
SMBARPR30	Right Side			
SMBARPB30	Both Sides (pictured)			

Specifications

Typical Actuation Force
< 10 lbf (< 44.5 N)

Required Movement of Lever
> 12 degree of rotation

Construction Materials
Carbon steel with clear zinc plating

ПРОМЭЛЕКТРОНИКА/ sales@prom-elec.com

Dimensions

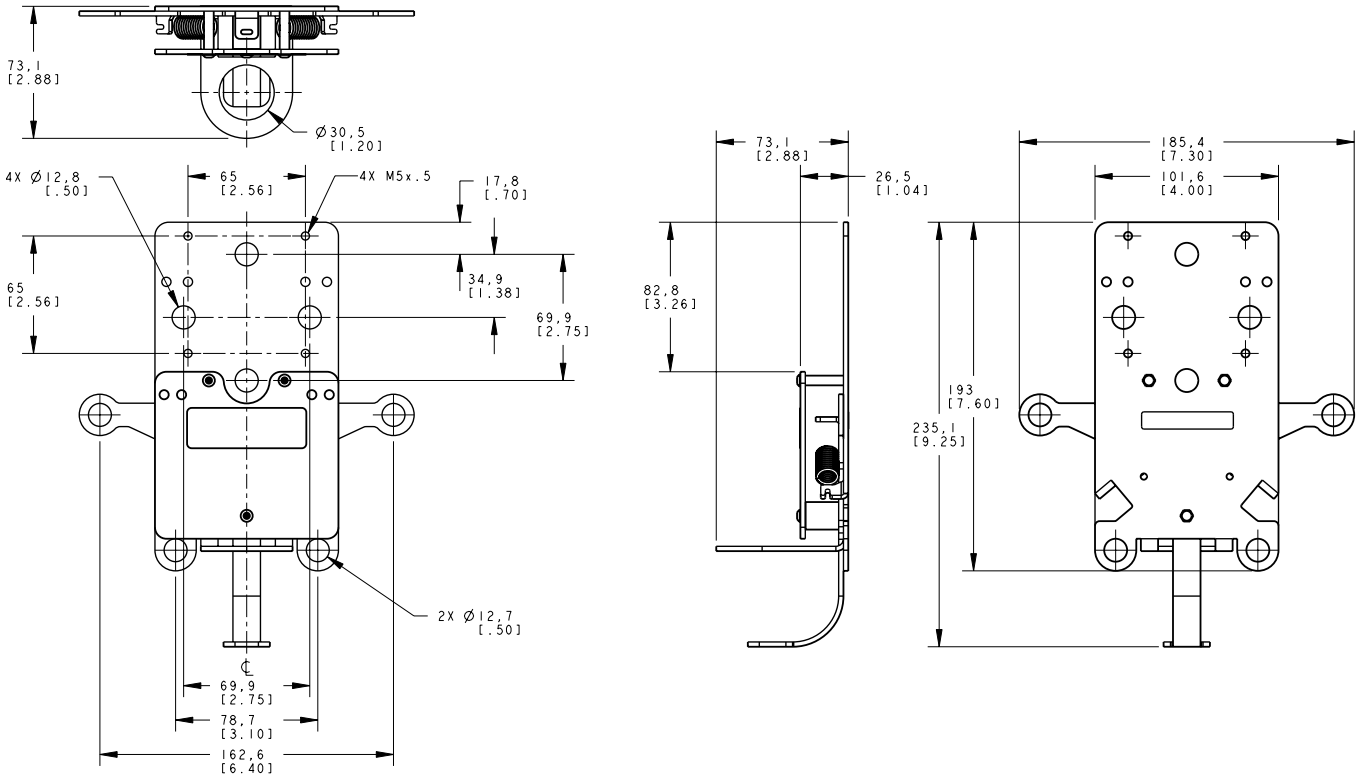

Accessories

Models		Package Qty.	Description
	**RPA-C1-10**	10 m	2 mm steel wire rope with 0.5 mm red PVC jacket (unterminated)
	RPA-C1-20	20 m	
	RPA-C1-100	100 m	
	**RPA-T1-4**	4 pcs	Thimble for 2 mm wire rope
	**RPA-CC1-4**	4 pcs	Clamp for 2 mm wire rope

Models		Package Qty.	Description
	RPA-TA1-1	1 pc	#4 Turnbuckle
	RPA-EB1-1	1 pc	1/4" - 20 Eye bolt (3" bolt shaft)
	RPA-P1-1	1 pc	Hanging pulley for in-line use

Banner Engineering Corp. Limited Warranty

Banner Engineering Corp. warrants its products to be free from defects in material and workmanship for one year following the date of shipment. Banner Engineering Corp. will repair or replace, free of charge, any product of its manufacture which, at the time it is returned to the factory, is found to have been defective during the warranty period. This warranty does not cover damage or liability for misuse, abuse, or the improper application or installation of the Banner product.

THIS LIMITED WARRANTY IS EXCLUSIVE AND IN LIEU OF ALL OTHER WARRANTIES WHETHER EXPRESS OR IMPLIED (INCLUDING, WITHOUT LIMITATION, ANY WARRANTY OF MERCHANTABILITY OR FITNESS FOR A PARTICULAR PURPOSE), AND WHETHER ARISING UNDER COURSE OF PERFORMANCE, COURSE OF DEALING OR TRADE USAGE.

This Warranty is exclusive and limited to repair or, at the discretion of Banner Engineering Corp., replacement. **IN NO EVENT SHALL BANNER ENGINEERING CORP. BE LIABLE TO BUYER OR ANY OTHER PERSON OR ENTITY FOR ANY EXTRA COSTS, EXPENSES, LOSSES, LOSS OF PROFITS, OR ANY INCIDENTAL, CONSEQUENTIAL OR SPECIAL DAMAGES RESULTING FROM ANY PRODUCT DEFECT OR FROM THE USE OR INABILITY TO USE THE PRODUCT, WHETHER ARISING IN CONTRACT OR WARRANTY, STATUTE, TORT, STRICT LIABILITY, NEGLIGENCE, OR OTHERWISE.**

Banner Engineering Corp. reserves the right to change, modify or improve the design of the product without assuming any obligations or liabilities relating to any product previously manufactured by Banner Engineering Corp. Any misuse, abuse, or improper application or installation of this product or use of the product for personal protection applications when the product is identified as not intended for such purposes will void the product warranty. Any modifications to this product without prior express approval by Banner Engineering Corp will void the product warranties. All specifications published in this document are subject to change; Banner reserves the right to modify product specifications or update documentation at any time. Specifications and product information in English supersede that which is provided in any other language. For the most recent version of any documentation, refer to: *www.bannerengineering.com*.

© Banner Engineering Corp. All rights reserved