

VIEW A-A
(END BRACKETS)

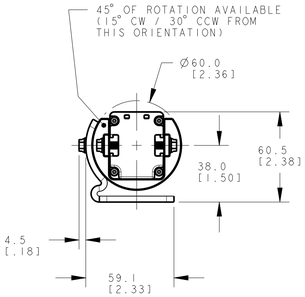

VIEW A-A
(CENTER BRACKET)

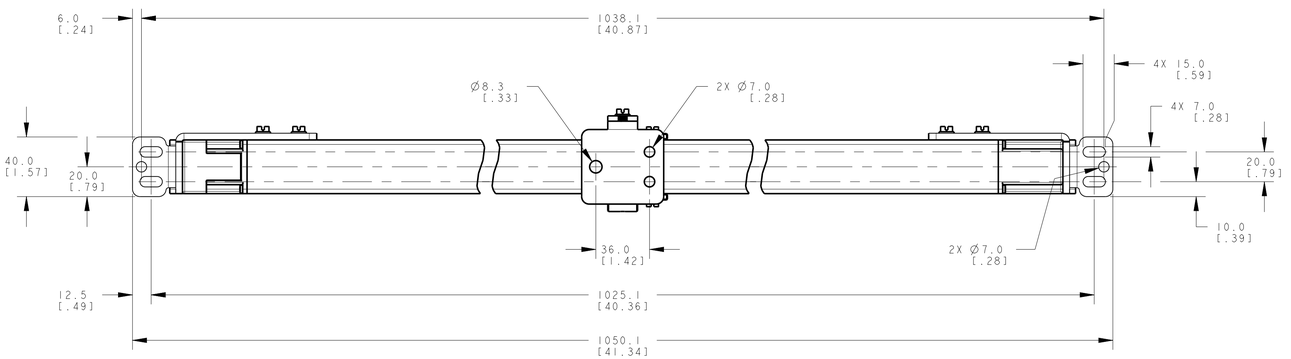

ISOMETRIC VIEW
SCALE 1:4

ISOMETRIC VIEW
SCALE 1:4

NOTES:
1. ALL DIMENSIONS ARE MILLIMETERS [INCHES] UNLESS OTHERWISE NOTED.
2. REFER TO "www.bannerengineering.com" FOR ADDITIONAL DATA AND SPECIFICATIONS.

This drawing is the property of BANNER ENGINEERING CORP. Any use or reproduction, in any form, without prior written permission of Banner is prohibited.
© 2015 Banner Engineering Corp.

THIRD ANGLE PROJECTION

BANNER ENGINEERING CORP.
www.bannerengineering.com

TITLE
EZ-SCREEN LS, SLLE...-980mm
WEB CAD DRAWINGS 2D/3D

SIZE	DRAWING NO.	REV.
D	181258	B

SCALE	SHEET
1:2	1 OF 1

CREO

ПРОМЭЛЕКТРОНИКА/ sales@prom-elec.com