Q45TA All-in-One Wireless Thermistor Sensor Node

Features

Sure Cross® Wireless Q45 Sensors combine the best of Banner's flexible sensor family with its reliable, field-proven, Sure Cross wireless architecture to solve new classes of applications limited only by the user's imagination. Containing a variety of sensor models, a radio, and an internal battery supply, this product line is truly plug-and-play.

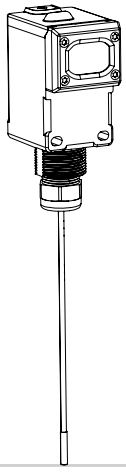

The Q45TA All-in-One Thermistor Sensor Node combines a temperature sensor probe with the reliable, field-proven, Sure Cross wireless architecture into one package, eliminating the need for ordering multiple components. The industrial-grade, battery-powered device can be used to wirelessly transmit temperature values to a wireless controller/Gateway for remote monitoring of critical systems.

The Q45TA All-in-One Thermistor Sensor Node:

- Measures temperature using a 1.8-meter thermistor probe
- Tracks materials as they are moved around a facility or between buildings
- Measures building and control processes easily
- Provides the temperature data needed to make critical shutdown decisions when the temperature becomes dangerously high
- Non-invasive add-on for industries that need to track manufacturing tolerances and provide data to customers

Models

Model	Radio Frequency	Inputs
DX80N9Q45TA	900 MHz ISM Band	Temperature
DX80N9Q45TA NB (ships without a battery)		

The following models are no longer available for order, but are still covered by the information in this document.

Model	Radio Frequency	Inputs
DX80N2Q45TA	2.4 GHz ISM Band	Temperature
DX80N2Q45TA NB (ships without a battery)		

Operating Instructions

Storage Mode

While in **storage mode**, the device's radio does not operate to conserve the battery. To put any device into storage mode, press and hold the binding button for five seconds. The device is in storage mode when the LEDs stop blinking. To wake the device, press and hold the binding button (inside the housing on the radio board) for five seconds.

Apply Power to the Q45 AA-Cell Models

Follow these instructions to install or replace the lithium "AA" cell batteries.

CAUTION:

- **As with all batteries, these are fire, explosion, and severe burn hazards. There is a risk of explosion if the battery is replaced incorrectly.**
- Do not burn or expose them to high temperatures. Do not recharge, crush, disassemble, or expose the contents to water.
- Verify the battery's positive and negative terminals align to the positive and negative terminals of the battery holder mounted within the case.
- Properly dispose of used batteries according to local regulations by taking them to a hazardous waste collection site, an e-waste disposal center, or another facility qualified to accept lithium batteries.

Original Instructions
04-Feb-25

© Banner Engineering Corp. All rights reserved.
www.bannerengineering.com

217352
p/n: 217352 Rev. E

ПРОМЭЛЕКТРОНИКА/ sales@prom-elec.com

1. Loosen the clamp plate with a small Phillips screwdriver and lift the cover.
2. Slide the battery board out of the Q45 housing.
3. If applicable, remove the discharged batteries.
4. Install the new batteries.

   Use Banner's **BWA-BATT-006** replacement batteries or equivalent 3.6 V AA lithium batteries, such as Xeno's XL-60F.
5. Verify the battery's positive and negative terminals align to the positive and negative terminals of the battery holder mounted within the case.
6. Slide the board containing the new batteries back into the Q45 housing.
7. Close the cover and gently tighten the clamp plate with the small Phillips screwdriver.

Q45 battery board

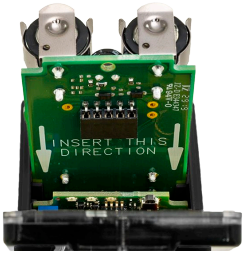

Configuration Instructions

Button and LEDs

1. Binding button
2. Red LED (flashing) indicates a radio link error with the Gateway.
3. Green LED (flashing) indicates a good radio link with the Gateway.
4. Amber LED is not used.
5. DIP switches

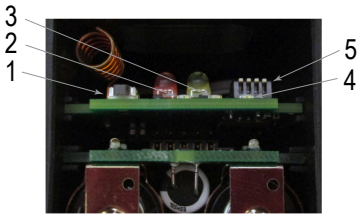

DIP Switches

After making any changes to any DIP switch position, reboot the Q45 by triple-clicking the binding button, waiting a second, then double-clicking the binding button.

The DIP switches are in the OFF position, by default. To turn a DIP switch on, push the switch toward the battery pack. DIP switches one through four are numbered from left to right. The factory default sample and report rate is 5 minutes.

	DIP Switches							
	1	2	3	4	5	6	7	8
900 MHz transmit power level: 500 mW (27 dBm)	OFF *							
900 MHz transmit power level: 250 mW (24 dBm), DX80 compatibility mode	ON							
Reserved		OFF *						
Reserved			OFF *					
Reserved				OFF *				
Reserved					OFF *			
Modbus or software configured (overrides DIP switches)						OFF *	OFF *	OFF *
Sample/report rate of 15 minutes						OFF	OFF	ON
Sample/report rate of 5 minutes						OFF	ON	OFF
Sample/report rate of 64 seconds						OFF	ON	ON
Reserved						ON	OFF	OFF
Reserved						ON	OFF	ON
Reserved						ON	ON	OFF
Reserved						ON	ON	ON

Refer to the Configuring for Sample on Demand technical note for details on sampling on demand and using a host system.

Transmit Power Levels

The 900 MHz radios have a high output option that will transmit at 500 mW (27 dBm). The low output option transmits at 250 mW (24 dBm). The 250 mW mode reduces the radio's range but improves the battery life in short-range applications. For 2.4 GHz models, this DIP switch is disabled. The transmit power for 2.4 GHz is fixed at about 65 mW EIRP (18 dBm).

Sample and Report Rates

The sample interval, or rate, defines how often the Sure Cross device samples the input. For battery-powered applications, setting a slower rate extends the battery life.

© Banner Engineering Corp. All rights reserved.
www.bannerengineering.com

The report rate defines how often the Node communicates the I/O status to the Gateway. For battery-powered applications, setting the report rate to a slower rate extends the battery life.

What is Sampling on Demand?

Sample on demand allows a host system to send a Modbus command to a register and require the inputs to immediately sample the sensor and report readings back to the host system and/or Gateway. Sampling on demand can be used between the normal periodic reporting.

The sample-on-demand feature requires using a host-controlled system capable of sending Modbus commands to the client radio.

Sample an Input Using a Host System

To sample the input, have the Host System write to the Node's register 15. To calculate which register this is for your Node, use this equation: 15 + (Node # × 16).

1. From the host system, write 0x13xx to the Node's register 15, where xx defines the input you want to sample.

For Input	Write Value (in hex)	Write Value (in decimal)
1	0x1301	4865
2	0x1302	4866
3	0x1304	4868
4	0x1308	4872
5	0x1310	4880
6	0x1320	4896
All Inputs	0x133F	4927

2. To send the Sample on Demand command to more than one input, add together the binary representation values.
   For example, to demand a sampling of inputs 1, 2, and 3, the Hex command is 0x1307.

Bind to the Gateway and Assign the Node Address

Before beginning the binding procedure, apply power to all the devices. Separate the devices by two meters when running the binding procedure. Put only one Gateway into binding at a time to prevent binding to the wrong Gateway.

1. On the Gateway: Enter binding mode.
   - For housed DX80 Gateways, triple-click button 2 on the Gateway. Both LEDs flash red.
   - For Gateway board modules, triple-click the button. The green and red LED flashes.
2. Assign the Q45 a Node address using the Gateway's rotary dials. Use the left rotary dial for the left digit and the right rotary dial for the right digit. For example, to assign your Q45 to Node 10, set the Gateway's left dial to 1 and the right dial to 0. Valid Node addresses are 01 through 47.
3. On the Q45: Loosen the clamp plate on the top of the Q45 and lift the cover.
4. Enter binding mode on the Q45 by triple-clicking the Q45's button.
   The red and green LEDs flash alternately and the sensor searches for a Gateway in binding mode. After the Q45 is bound, the LEDs stay solid momentarily, then they flash together four times. The Q45 exits binding mode.
5. Label the sensor with the Q45's Node address number for future reference.
6. Repeat steps 2 through 5 for as many Q45s as are needed for your network.
7. On the Gateway: After binding all Q45s, exit binding mode.
   - For housed DX80 Gateways, double-click button 2.
   - For board-level DX80 Gateways, double-click the button.

For Gateways with single-line LCDs: After binding your Q45 to the Gateway, make note of the binding code displayed under the Gateway's *DVCFG menu, XADR submenu on the LCD. Knowing the binding code prevents having to re-bind all Q45s if your Gateway is ever replaced.

Bind to a DXM and Assign the Node Address

Before beginning the binding procedure, apply power to all the devices. Separate the radios by two meters when running the binding procedure. Put only one DXM into binding mode at a time to prevent the Q45 from binding to the wrong Gateway.

1. On the DXM: Use the arrow keys to select the **ISM Radio** menu on the LCD and click **ENTER**.
2. Highlight the **Binding** menu and click **ENTER**.
3. Use the arrow keys to select the Node address to bind the Q45 to.
4. On the Q45: Loosen the top clamp plate and lift the cover.
5. Enter binding mode by triple-clicking the binding button.
   The red and green LEDs flash alternately and the sensor searches for a Gateway in binding mode. After the Node binds, the LEDs stay solid momentarily, then they flash together four times. The Node exits binding mode.
6. Label the sensor with the Node address number for future reference.

© Banner Engineering Corp. All rights reserved.
www.bannerengineering.com

7. On the DXM: Click **BACK** to exit binding for that specific Node address.
8. Repeat steps 3 through 7 and change the Node address for as many Q45s as are needed for your network.
9. On the DXM: After you have finished forming your network, click **BACK** until you reach the main menu.

Q45TA Modbus Registers

I/O #	Modbus Holding Register		I/O Type	I/O Range		Holding Register Representation	
	Gateway	Any Node		Min.	Max.	Min.	Max.
1	1	1 + (Node# × 16)	Reserved (default value of 1)	0	1	0	1
2	2	2 + (Node# × 16)	Temperature °C	–1638.3	1638.4	–32768	32767
3	3	3 + (Node# × 16)	Temperature °F	–1638.3	1638.4	–32768	32767
		...					
7	7	7 + (Node# × 16)	Reserved				
8	8	8 + (Node# × 16)	Device Message				
		...					
15	15	15 + (Node# × 16)	Control Message				
16	16	16 + (Node# × 16)	Reserved				

The temperature = (Modbus register value) ÷ 20.

Specifications

Radio Specifications for Performance Internal Antenna

Radio Transmit Power (900 MHz, 500 mW radios)

Conducted: 27 dBm (500 mW)

EIRP with the supplied antenna: < 36 dBm

Radio Transmit Power (2.4 GHz radios)

Conducted: < 18 dBm (65 mW)

EIRP with the supplied antenna: < 20 dBm (100 mW)

Antenna Minimum Separation Distance

900 MHz radios transmitting at ≥ 500 mW: 4.57 m (15 ft) with the supplied antenna

2.4 GHz radios transmitting at 65 mW: 0.3 m (1 ft) with the supplied antenna

Radio Range

A 2 dB antenna ships with this device.

Transmit power and range are subject to many factors, including antenna gain, installation methods, characteristics of the application, and environmental conditions.

Please refer to the following documents for installation instructions and high-gain antenna options.

Installing Your Sure Cross® Radios (151514)
Conducting a Site Survey (133602)
Sure Cross® Antenna Basics (132113)

Link Timeout (Performance)

Gateway: Configurable via User Configuration Software

Node: Defined by Gateway

Spread Spectrum Technology

FHSS (Frequency Hopping Spread Spectrum)

900 MHz Compliance (SX7023EXT Radio Module)

Radio module is indicated by the product label marking

Contains FCC ID: UE3SX7023EXT

Contains IC: 7044A-SX7023EXT

2.4 GHz Compliance (SX243 Radio Module)

Radio module is indicated by the product label marking

Contains FCC ID: UE3SX243

Radio Equipment Directive (RED) 2014/53/EU

Contains IC: 7044A-SX243

FCC Part 15 Class A for Intentional Radiators

This equipment has been tested and found to comply with the limits for a Class A digital device, pursuant to Part 15 of the FCC Rules. These limits are designed to provide reasonable protection against harmful interference when the equipment is operated in a commercial environment. This equipment generates, uses, and can radiate radio frequency energy and, if not installed and used in accordance with the instruction manual, may cause harmful interference to radio communications. Operation of this equipment in a residential area is likely to cause harmful interference in which case the user will be required to correct the interference at his own expense.

(Part 15.21) Any changes or modifications not expressly approved by the party responsible for compliance could void the user's authority to operate this equipment.

Industry Canada Statement for Intentional Radiators

This device contains licence-exempt transmitters(s)/receiver(s) that comply with Innovation, Science and Economic Development Canada's licence-exempt RSS(s). Operation is subject to the following two conditions:

1. This device may not cause interference.
2. This device must accept any interference, including interference that may cause undesired operation of the device.

Cet appareil contient des émetteurs/récepteurs exemptés de licence conformes à la norme Innovation, Sciences, et Développement économique Canada. L'exploitation est autorisée aux deux conditions suivantes:

1. L'appareil ne doit pas produire de brouillage.

© Banner Engineering Corp. All rights reserved.
www.bannerengineering.com

2. L'utilisateur de l'appareil doit accepter tout brouillage radioélectrique subi, même si le brouillage est susceptible d'en compromettre le fonctionnement.

Q45DT and Q45TA Specifications

Thermistor Probe

Cable length: 1.8 m
Cable Material: PVC
Tube/Thermistor: Copper Plated/PS103G2
Range: –20 °C to 105 °C (–4 °F to 221 °F)
Accuracy: ± 0.2%

Default Sensing Interval

5 minutes

Typical Battery Life

See chart

Indicators

Red and green LEDs (radio function)

Construction

Molded reinforced thermoplastic polyester housing, oring-sealed transparent Lexan® cover, molded acrylic lenses, and stainless steel hardware. Designed to withstand 1200 psi washdown.

Certifications

CE/UKCA approval only applies to 2.4 GHz models

Banner Engineering BV
Park Lane, Culliganlaan 2F bus 3
1831 Diegem, BELGIUM

Turck Banner LTD Blenheim House
Blenheim Court
Wickford, Essex SS11 8YT
GREAT BRITAIN

ANATEL
Agência Nacional de Telecomunicações
03737-22-04042

ANATEL

Este equipamento não tem direito à proteção contra interferência prejudicial e não pode causar interferência em sistemas devidamente autorizados. Para maiores informações, consulte o site da ANATEL www.gov.br/anatel/pt-br/

ANATEL
Agência Nacional de Telecomunicações

Environmental Specifications for the Q45

Operating Conditions

–40 °C to +70 °C (–40 °F to +158 °F); 90% at +50 °C maximum relative humidity (non-condensing)
Radiated Immunity: 10 V/m (EN 61000-4-3)

Environmental Rating

NEMA 6P
IP67

Operating the devices at the maximum operating conditions for extended periods can shorten the life of the device.

Q45CT-DT-TA Battery Life

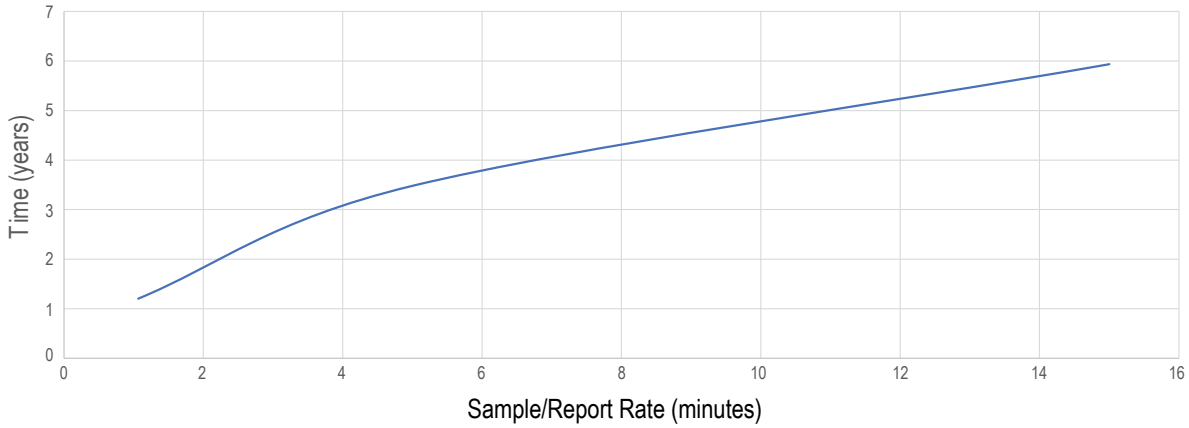

© Banner Engineering Corp. All rights reserved.
www.bannerengineering.com

Q45TA Dimensions

All measurements are listed in millimeters, unless noted otherwise. The measurements provided are subject to change.

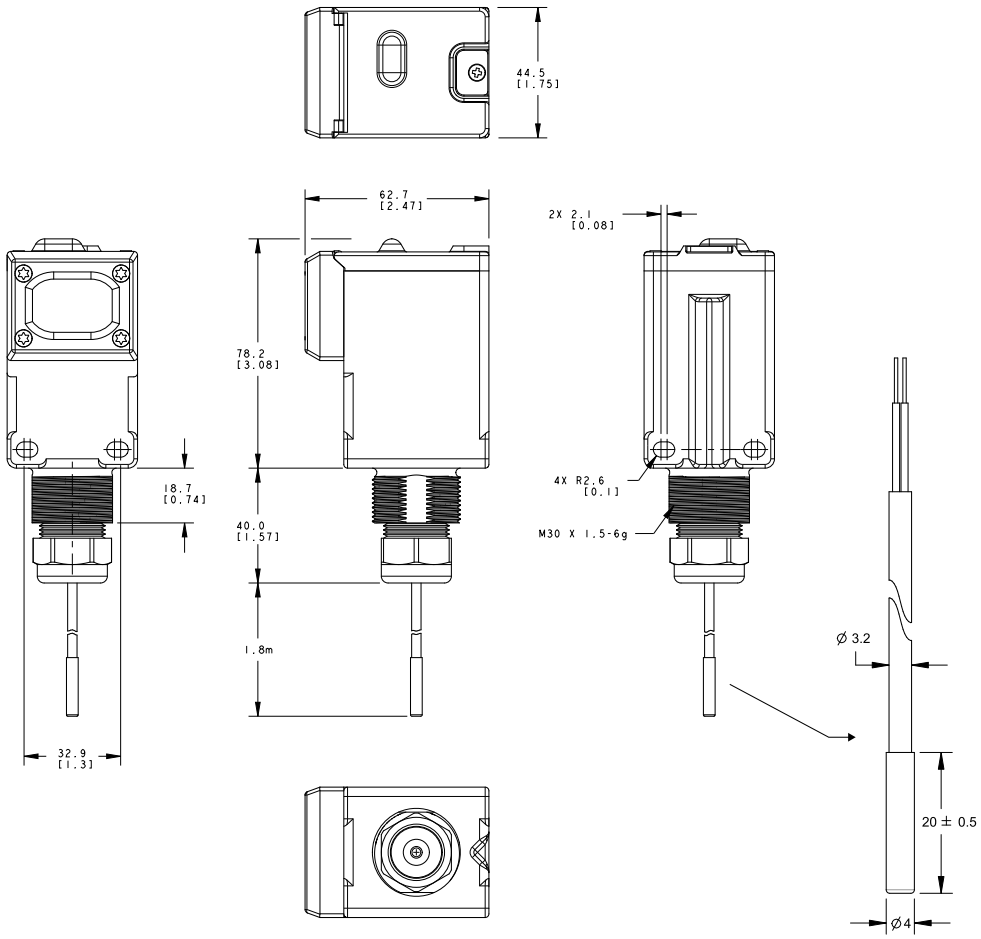

Accessories

BWA-BATT-006

- 3.6 V Lithium AA cell
- Two batteries



BWA-FTH-001

- M12 × 1 mm female to 1/2-inch NPT male adapter
- Brass

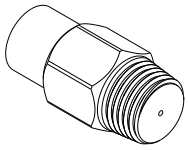

Warnings

WARNING:

- **Do not use this device for personnel protection**
- Using this device for personnel protection could result in serious injury or death.
- This device does not include the self-checking redundant circuitry necessary to allow its use in personnel safety applications. A device failure or malfunction can cause either an energized (on) or de-energized (off) output condition.

© Banner Engineering Corp. All rights reserved.
www.bannerengineering.com

IMPORTANT: Please download the complete Q45TA All-in-One Thermistor Sensor Node technical documentation, available in multiple languages, from www.bannerengineering.com for details on the proper use, applications, Warnings, and installation instructions of this device.

IMPORTANT: Por favor descargue desde www.bannerengineering.com toda la documentación técnica de los Q45TA All-in-One Thermistor Sensor Node, disponibles en múltiples idiomas, para detalles del uso adecuado, aplicaciones, advertencias, y las instrucciones de instalación de estos dispositivos.

IMPORTANT: Veuillez télécharger la documentation technique complète des Q45TA All-in-One Thermistor Sensor Node sur notre site www.bannerengineering.com pour les détails sur leur utilisation correcte, les applications, les notes de sécurité et les instructions de montage.

Install and properly ground a qualified surge suppressor when installing a remote antenna system. Remote antenna configurations installed without surge suppressors invalidate the manufacturer's warranty. Keep the ground wire as short as possible and make all ground connections to a single-point ground system to ensure no ground loops are created. No surge suppressor can absorb all lightning strikes; do not touch the Sure Cross® device or any equipment connected to the Sure Cross® device during a thunderstorm.

Exporting Sure Cross® Radios. It is our intent to fully comply with all national and regional regulations regarding radio frequency emissions. **Customers who want to re-export this product to a country other than that to which it was sold must ensure the device is approved in the destination country.** The Sure Cross wireless products were certified for use in these countries using the antenna that ships with the product. When using other antennas, verify you are not exceeding the transmit power levels allowed by local governing agencies. This device has been designed to operate with the antennas listed on Banner Engineering's website and having a maximum gain of 9 dBm. Antennas not included in this list or having a gain greater than 9 dBm are strictly prohibited for use with this device. The required antenna impedance is 50 ohms. To reduce potential radio interference to other users, the antenna type and its gain should be so chosen such that the equivalent isotropically radiated power (EIRP) is not more than that permitted for successful communication. Consult with Banner Engineering Corp. if the destination country is not on this list.

IMPORTANT:

- **Never operate a radio without connecting an antenna**
- Operating radios without an antenna connected will damage the radio circuitry.
- To avoid damaging the radio circuitry, never apply power to a Sure Cross® Performance or Sure Cross® MultiHop radio without an antenna connected.

IMPORTANT:

- **Electrostatic discharge (ESD) sensitive device**
- ESD can damage the device. Damage from inappropriate handling is not covered by warranty.
- Use proper handling procedures to prevent ESD damage. Proper handling procedures include leaving devices in their anti-static packaging until ready for use; wearing anti-static wrist straps; and assembling units on a grounded, static-dissipative surface.

Banner Engineering Corp Limited Warranty

Banner Engineering Corp. warrants its products to be free from defects in material and workmanship for one year following the date of shipment. Banner Engineering Corp. will repair or replace, free of charge, any product of its manufacture which, at the time it is returned to the factory, is found to have been defective during the warranty period. This warranty does not cover damage or liability for misuse, abuse, or the improper application or installation of the Banner product.

THIS LIMITED WARRANTY IS EXCLUSIVE AND IN LIEU OF ALL OTHER WARRANTIES WHETHER EXPRESS OR IMPLIED (INCLUDING, WITHOUT LIMITATION, ANY WARRANTY OF MERCHANTABILITY OR FITNESS FOR A PARTICULAR PURPOSE), AND WHETHER ARISING UNDER COURSE OF PERFORMANCE, COURSE OF DEALING OR TRADE USAGE.

This Warranty is exclusive and limited to repair or, at the discretion of Banner Engineering Corp., replacement. **IN NO EVENT SHALL BANNER ENGINEERING CORP. BE LIABLE TO BUYER OR ANY OTHER PERSON OR ENTITY FOR ANY EXTRA COSTS, EXPENSES, LOSSES, LOSS OF PROFITS, OR ANY INCIDENTAL, CONSEQUENTIAL OR SPECIAL DAMAGES RESULTING FROM ANY PRODUCT DEFECT OR FROM THE USE OR INABILITY TO USE THE PRODUCT, WHETHER ARISING IN CONTRACT OR WARRANTY, STATUTE, TORT, STRICT LIABILITY, NEGLIGENCE, OR OTHERWISE.**

Banner Engineering Corp. reserves the right to change, modify or improve the design of the product without assuming any obligations or liabilities relating to any product previously manufactured by Banner Engineering Corp. Any misuse, abuse, or improper application or installation of this product or use of the product for personal protection applications when the product is identified as not intended for such purposes will void the product warranty. Any modifications to this product without prior express approval by Banner Engineering Corp will void the product warranties. All specifications published in this document are subject to change; Banner reserves the right to modify product specifications or update documentation at any time. Specifications and product information in English supersede that which is provided in any other language. For the most recent version of any documentation, refer to: www.bannerengineering.com.

For patent information, see www.bannerengineering.com/patents.

Notas Adicionales (con Antena)

Información México: La operación de este equipo está sujeta a las siguientes dos condiciones: 1) es posible que este equipo o dispositivo no cause interferencia perjudicial y 2) este equipo debe aceptar cualquier interferencia, incluyendo la que pueda causar su operación no deseada.

Banner es una marca registrada de Banner Engineering Corp. y podrán ser utilizadas de manera indistinta para referirse al fabricante. "Este equipo ha sido diseñado para operar con las antenas tipo Omnidireccional para una ganancia máxima de antena de 6 dBd y Yagi para una ganancia máxima de antena 10 dBd que en seguida se enlistan. También se incluyen aquellas con aprobación ATEX tipo Omnidireccional siempre que no excedan una ganancia máxima de antena de 6dBd. El uso con este equipo de antenas no incluidas en esta lista o que tengan una ganancia mayor que 6 dBd en tipo omnidireccional y 10 dBd en tipo Yagi, quedan prohibidas. La impedancia requerida de la antena es de 50 ohms."

Approved Antennas

BWA-9O2-C--Antena, Omni 902-928 MHz, 2 dBd, junta de caucho, RP-SMA Macho
BWA-9O5-C--Antena, Omni 902-928 MHz, 5 dBd, junta de caucho, RP-SMA Macho
BWA-9O6-A--Antena, Omni 902-928 MHz, 6 dBd, fibra de vidrio, 1800mm, N Hembra
BWA-9Y10-A--Antena, Yagi, 900 MHz, 10 dBd, N Hembra

Mexican Importer

Banner Engineering de Mèxico, S. de R.L. de C.V. | David Alfaro Siqueiros 103 Piso 2 Valle oriente | San Pedro Garza Garcia Nuevo Leòn, C. P. 66269

81 8363.2714

© Banner Engineering Corp. All rights reserved.
www.bannerengineering.com