## Datasheet

Plastic fiber optics usually have a large, monofilament core that comes in a single strand. Advances in LED technology have improved the performance and range of plastic fiber optic sensing systems to the point that they are nearly equivalent to glass fibers. Plastic fibers are a versatile, cost-effective choice for many fiber optic sensing applications.



- Ideal for detecting small objects
- Withstand repeated flexing and bending
- Available in individual or bifurcated styles
- Available with optional DURA-BEND™ fibers for improved flexibility for difficult-to-access locations, without the decreased performance to which excessively bent standard plastic fibers optics are prone
- Unterminated models can be cut to length in the field

Opposed mode plastic fiber optics are sold and used in pairs. Bifurcated fibers are two-way fibers with a single sensing end that both emits and receives light and with dual-control sensor ends that attach separately to the sensor's LED and photodetector.

## Plastic Fiber Models

| Diffuse Reflective Mode—Bifurcated Models | | | | | |
|---|---|---|---|---|---|
| **Model** | **Length (m)** | **Bundle Diameter (mm)** | **Range** | **Description** | |
| **PBCT46U** | 2 | 1 mm and 16 x 0.25 mm | DF-G1: 220 mm (8.7 in)<br>D10D: 345 mm (13.6 in)<br>D10B: 145 mm (5.7 in)<br>D10A: 120 mm (4.7 in) | Coaxial fiber with an M6 threaded tip; unterminated straight cable |  |
| **PBT26U** | 2 | 0.5 | DF-G1: 80 mm (3.1 in)<br>D10D: 150 mm (5.9 in)<br>D10B: 38 mm (1.5 in)<br>D10A: 25 mm (1 in) | Bifurcated fiber with an M3 threaded tip; unterminated straight cable |  |
| **PBT26U-VL** | 2 | 0.5 | DF-G1: 65 mm (2.6 in)<br>DF-G2: 105 mm (4.1 in)<br>DF-G3: 503 mm (19.8 in) | Vantage Line; bifurcated fiber with an M3 threaded tip; unterminated straight cable with flex relief |  |



ПРОМЭЛЕКТРОНИКА/ sales@prom-elec.com

| Diffuse Reflective Mode—Bifurcated Models | | | | | |
|---|---|---|---|---|---|
| **Model** | **Length (m)** | **Bundle Diameter (mm)** | **Range** | **Description** | |
| **PBT415U** | 5 | 1 | DF-G1: 180 mm (7.1 in)<br>D10D: 250 mm (9.8 in)<br>D10B: 85 mm (3.3 in)<br>D10A: 72 mm (2.8 in) | Bifurcated fiber with an M6 threaded tip; unterminated straight cable |  |
| **PBT46U** | 2 | 1 | DF-G1: 220 mm (8.7 in)<br>D10D: 300 mm (11.8 in)<br>D10B: 100 mm (3.9 in)<br>D10A: 85 mm (3.3 in) | Bifurcated fiber with an M6 threaded tip; unterminated straight cable |  |
| **PBT46U-VL** | 2 | 1 | DF-G1: 186 mm (7.3 in)<br>DF-G2: 301 mm (11.8 in)<br>DF-G3: 1443 mm (56.8 in) | Vantage Line; bifurcated fiber with an M3 threaded tip; unterminated straight cable with flex relief |  |
| **PBT66U** | 2 | 1.5 | DF-G1: 310 mm (12.2 in)<br>D10D: 475 mm (18.7 in)<br>D10B: 200 mm (7.9 in)<br>D10A: 170 mm (6.7 in) | Bifurcated fiber with an M6 threaded tip; unterminated straight cable |  |

| Opposed Mode—Individual Fiber Models | | | | | |
|---|---|---|---|---|---|
| **Model** | **Length (m)** | **Bundle Diameter (mm)** | **Range** | **Description** | |
| **PDIS46UM12** | 2 | 1 | DF-G1: 12 mm (0.5 in)<br>D10D: 12 mm (0.5 in)<br>D10B: 12 mm (0.5 in)<br>D10A: 12 mm (0.5 in) | Slot sensing head to; unterminated straight cable |  |
| **PIAT46U** | 2 | 1 | DF-G1: 840 mm (33.1 in)<br>D10D: 1200 mm (47.2 in)<br>D10B: 320 mm (12.6 in)<br>D10A: 275 mm (10.8 in) | M2.5 and M4 threaded tip with an angled probe; unterminated straight cable |  |
| **PIAT46UHFMTA** | 2 | 1 | DF-G1: 440 mm (17.3 in)<br>D10D: 1000 mm (39.4 in)<br>D10B: 330 mm (13 in)<br>D10A: 230 mm (9.1 in) | M2.5 and M4 threaded tip to right angle; unterminated straight DuraBend cable |  |
| **PIPS49TMB5MFF** | 2.7 | 1 | | Probe with sideview exit; SteelSkin sheathing with TMB5 Termination |  |
| **PIRS1X166UMPMAL** | 2 | 16 x 0.25 mm | DF-G1: 680 mm (26.8 in)<br>D10D: 1000 mm (39.4 in)<br>D10B: 300 mm (11.8 in)<br>D10A: 260 mm (10.2 in) | Rectangular body with 33.5mm long sideview array; unterminated straight cable |  |

| Opposed Mode—Individual Fiber Models | | | | | |
|---|---|---|---|---|---|
| **Model** | **Length (m)** | **Bundle Diameter (mm)** | **Range** | **Description** | |
| **PIT26U** | 2 | 0.5 | DF-G1: 220 mm (8.7 in)<br>D10D: 400 mm (15.7 in)<br>D10B: 95 mm (3.7 in)<br>D10A: 75 mm (3 in) | M3 threaded tip; unterminated straight cable |  |
| **PIT46U** | 2 | 1 | DF-G1: 820 mm (32.3 in)<br>D10D: 1200 mm (47.2 in)<br>D10B: 320 mm (12.6 in)<br>D10A: 300 mm (11.8 in) | M2.5 and M4 threaded tip; unterminated straight cable |  |
| **PIT46UHF** | 2 | 1 | DF-G1: 400 mm (15.7 in)<br>D10D: 1000 mm (39.4 in)<br>D10B: 330 mm (13 in)<br>D10A: 230 mm (9.1 in) | M2.5 and M4 threaded tip; unterminated straight cable |  |
| **PIT46U-VL** | 2 | 1 | DF-G1: 558 mm (22 in)<br>DF-G2: 904 mm (35.6 in)<br>DF-G3: 4335 mm (170.7 in) | M2.6 and M4 threaded tip; flex relief; unterminated straight cable; Vantage Line |  |
| **PIT66U** | 2 | 1.5 | DF-G1: 1320 mm (52 in)<br>D10D: 2400 mm (94.5 in)<br>D10B: 600 mm (23.6 in)<br>D10A: 525 mm (20.7 in) | M2.5 and M4 threaded tip; unterminated straight cable |  |

## Cut the Plastic Fiber

An unterminated plastic fiber is designed to be cut by the customer to the length required for the application. To facilitate cutting, a Banner model PFC-4 cutting device is supplied with this fiber.

1. Locate the non-terminated end, and determine the length of fiber required for the application.
2. Lift the top of the cutter to open the cutting ports.
3. Insert the non-terminated end through one of the four large cutting ports on the PFC-4 cutter so that the excess fiber protrudes from the back of the cutter.
4. Double-check the fiber length, and close the cutter until the fiber is cut.
5. Gently wipe the cut ends of the fiber with a clean, dry cloth to remove any contamination.



**Note:** Do not use solvents or abrasives on any exposed optical fiber. Do not use a cutting port more than once. The blade may tend to dull after one cut.

## Installation Instructions

### Installing the Fibers in a DF-Gx Sensor

Follow these steps to install glass or plastic fibers.

1. Open the dust cover.
2. Move the fiber clamp forward to unlock it.
3. Insert the fiber(s) into the fiber port(s) until they stop.
4. Move the fiber clamp backward to lock the fiber(s).
5. Close the dust cover.

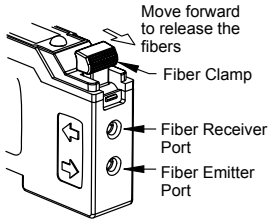

**Note:** For optimum performance of IR models, if applicable, glass fibers must be used.

## Installing Plastic Fibers in a D11 or D12 Sensor

Follow these steps to install plastic fibers.

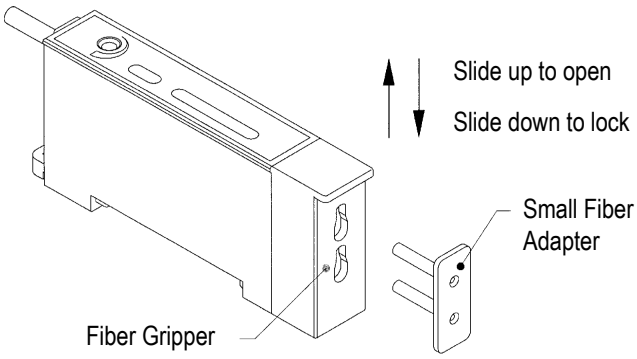


1. Cut the fiber ends according to the instructions included with the fibers.
2. Slide the fiber gripper up (open).
3. If you are using 0.254 mm (0.01 in) or 0.508 mm (0.02 inch) diameter fibers: Insert the adaptor into the ports as far as it will go.
4. For all fiber diameters: Insert the prepared plastic fiber sensor ends gently into the ports as far as they will go.
5. Slide the fiber gripper back down to lock it.

## Installing Plastic Fibers on a MINI-BEAM

Follow these instructions to install plastic fibers into your sensor. MINI-BEAMS may have either a fiber gripper or a clamp screw. **MINI-BEAM** and **ECONO-BEAM** sensors for use with plastic fiber optic assemblies include sensors with the letters **FP** in their model number.

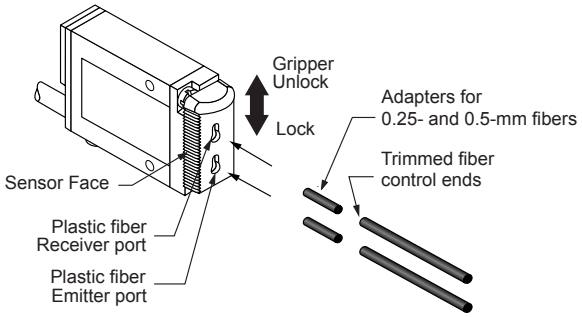


*Figure 1. MINI-BEAM with fiber grippers*

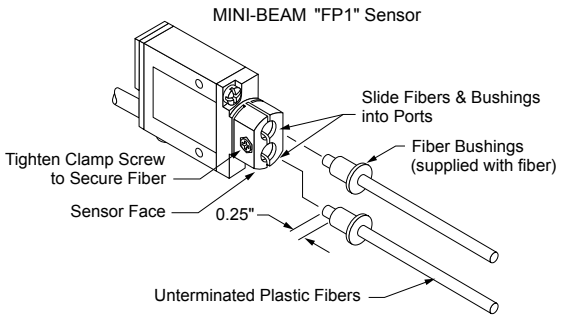


*Figure 2. MINI-BEAM with clamp screws*

1. Prepare the sensor ends of the fibers (see Cut the Plastic Fiber on p. 3).
2. Prepare the sensor for the fibers.
   - For models with a fiber gripper: Unlock the fiber gripper as shown in the figure and apply the appropriate fiber adaptors to the fiber, if needed.
   - For models with a clamp screw: Loosen the clamp screw on the sensor face.
3. Insert the plastic fibers.
   - For models with a fiber gripper: Gently insert the prepared fiber ends into the ports as far as they will go.
   - For models with a clamp screw: Align the fiber ends flush with the ends of the bushings as shown. Hold the bushings to the fibers and slide both into the sensor ports. Push the fiber an additional 1 inch through the bushing.
4. Lock in the fibers.
   - For models with a fiber gripper: Slide the fiber gripper back to lock, as shown in the figure.
   - For models with a clamp screw: Tighten the clamp screw to secure the fibers.

## Installing the Plastic Fibers on a MAXI-BEAM, VALU-BEAM, or Q45 Sensor

**MAXI-BEAM**, **VALU-BEAM**, and **Q45** Series sensors for use with plastic fiber optic assemblies include sensors with the letters **FP** in their model number suffix.

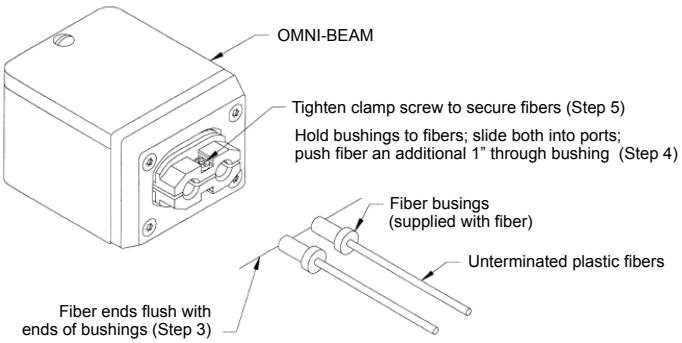


1. Prepare the sensor ends of the fibers (see Cut the Plastic Fiber on p. 3).
2. Loosen the clamp screw on the sensor face.
3. Align the fiber ends flush with the ends of the bushings as shown.
4. Hold the bushings to the fibers and slide both into the sensor ports. Push the fiber an additional 1 inch through the bushing.
5. Tighten the clamp screw to secure the fibers.

## Specifications

**Sensing Range**
Refer to the specific fiber optic/sensor combination

**Minimum Bend Radius**
8 mm for 0.25 mm diameter fibers
12 mm for 0.5 mm diameter fibers (except DURA-BEND™)
25 mm for 1.0 mm diameter fibers (except DURA-BEND™)
38 mm for 1.5 mm diameter fibers

**Repeat Bending/Flexing**
See www.bannerengineering.com
Avoid stress at the point where the cable enters the sensor (control end) and at the sensing end tip. Coiled plastic fiber optic assemblies are recommended for any application requiring reciprocating fiber motion.

**Operating Temperature**
–30 °C to +70 °C (–22 °F to +158 °F) unless otherwise specified

**Temperature Extremes**
Temperatures below –30 °C cause the plastic to become brittle, but will not cause transmission loss.
Temperatures above +70 °C cause both transmission loss and fiber shrinkage.

**Construction**
Optical Fiber: acrylic (PMMA) monofilament, except as noted
Protective Jacket: black polyethylene, except as noted
Threaded End Tips and Hardware: nickel-plated brass, except as noted
Probe End Tips: annealed (bendable) 304 stainless steel
Angled End tips: hardened 304 stainless steel
Ferrule End Tips: 303 stainless steel

**Implied Dimensional Tolerance**
All dimensions are in millimeters: x = ±2.5 mm, x.x = ±0.25 mm and x.xx = ±0.12 mm, unless specified. "L" = ±40 mm per meter

**Chemical Resistance**
The acrylic core of the monofilament optical fiber will be damaged by contact with acids, strong bases (alkalis) and solvents. The polyethylene jacket will protect the fiber from most chemical environments. However, materials may migrate through the jacket with long term exposure. Samples of fiber optic material are available from Banner for testing and evaluation. Teflon coated fibers are also available.

### Application Notes and Warnings

Plastic fiber assemblies with "U" in the suffix of the model numbers have unterminated control ends (the end that is coupled to the photoelectric sensor). The customer can cut these fiber optic assemblies to the required length using the supplied cutter. Use only the supplied cutter to ensure optimal light coupling efficiency.

Terminated plastic fiber assemblies are optically ground and polished and cannot be shortened, spliced, or otherwise modified.

Do not subject the plastic fibers to sharp bends, pinching, high tensile loads, or high levels of radiation.

When ordering fiber lengths in excess of 2 m, take into account light signal attenuation because of the additional length.

Because of their light transmission properties, plastic fiber optics are recommended for use only with visible light fiber optic sensors.

Use caution when applying fiber optics in hazardous locations. Although fiber optic assemblies are, by themselves, intrinsically safe, the sensor and associated electronics must be LOCATED IN A SAFE ENVIRONMENT. Alternatively, fiber optics may be used with NAMUR sensor model Q45AD9FP. Fiber optics do not necessarily provide a hermetic seal between a hazardous environment and the safe environment.

# Banner Engineering Corp. Limited Warranty

Banner Engineering Corp. warrants its products to be free from defects in material and workmanship for one year following the date of shipment. Banner Engineering Corp. will repair or replace, free of charge, any product of its manufacture which, at the time it is returned to the factory, is found to have been defective during the warranty period. This warranty does not cover damage or liability for misuse, abuse, or the improper application or installation of the Banner product.

**THIS LIMITED WARRANTY IS EXCLUSIVE AND IN LIEU OF ALL OTHER WARRANTIES WHETHER EXPRESS OR IMPLIED (INCLUDING, WITHOUT LIMITATION, ANY WARRANTY OF MERCHANTABILITY OR FITNESS FOR A PARTICULAR PURPOSE), AND WHETHER ARISING UNDER COURSE OF PERFORMANCE, COURSE OF DEALING OR TRADE USAGE.**

This Warranty is exclusive and limited to repair or, at the discretion of Banner Engineering Corp., replacement. **IN NO EVENT SHALL BANNER ENGINEERING CORP. BE LIABLE TO BUYER OR ANY OTHER PERSON OR ENTITY FOR ANY EXTRA COSTS, EXPENSES, LOSSES, LOSS OF PROFITS, OR ANY INCIDENTAL, CONSEQUENTIAL OR SPECIAL DAMAGES RESULTING FROM ANY PRODUCT DEFECT OR FROM THE USE OR INABILITY TO USE THE PRODUCT, WHETHER ARISING IN CONTRACT OR WARRANTY, STATUTE, TORT, STRICT LIABILITY, NEGLIGENCE, OR OTHERWISE.**

Banner Engineering Corp. reserves the right to change, modify or improve the design of the product without assuming any obligations or liabilities relating to any product previously manufactured by Banner Engineering Corp. Any misuse, abuse, or improper application or installation of this product or use of the product for personal protection applications when the product is identified as not intended for such purposes will void the product warranty. Any modifications to this product without prior express approval by Banner Engineering Corp will void the product warranties. All specifications published in this document are subject to change; Banner reserves the right to modify product specifications or update documentation at any time. Specifications and product information in English supersede that which is provided in any other language. For the most recent version of any documentation, refer to: www.bannerengineering.com.

For patent information, see www.bannerengineering.com/patents.



© Banner Engineering Corp. All rights reserved