QS18VxAF250 Electronically Adjustable Background Suppression Sensor (30-250mm)

Original Instructions
p/n: 201339 Rev. H
20-May-26
© Banner Engineering Corp. All rights reserved. www.bannerengineering.com

ПРОМЭЛЕКТРОНИКА/ sales@prom-elec.com

Contents

Chapter 1 Features 3
Models 3
Overview 4
Specifications 4
FCC Part 15 Class A for Unintentional Radiators 5
Industry Canada ICES-003(A) 5
Performance Curves 5
Dimensions 6

Chapter 2 Installation Instructions 8
Sensor Orientation 8
Wiring Diagrams 8
Sensor Setup (Background Suppression Mode) 9
IO-Link Interface 9

Chapter 3 Accessories 11
Brackets 11
Cordsets 12

Chapter 4 Product Support and Maintenance 14
Clean Sensor with Compressed Air Then Isopropyl Alcohol 14
Repairs and Translations (No Field-Replaceable Parts) 14
Discontinued Models 16
Contact Us 17
Banner Engineering Corp Limited Warranty 17

© Banner Engineering Corp. All rights reserved. www.bannerengineering.com

Chapter Contents

Models 3
Overview 4
Specifications 4

Chapter 1 Features

Compact sensors featuring adjustable range background suppression mode

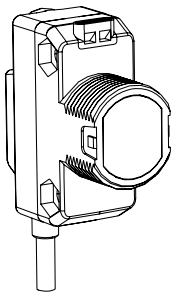

- Two optical designs optimized for reliable long-range target detection and stable detection of colorfully printed packages
  - High visibility red LED spot AF250 model recommended for long-range detection to 250 mm on black or white targets
  - Small bright red LED spot AF120 model recommended for reliable detection of colorfully printed packages and small parts or features
- Simple single-turn potentiometer adjustment of cutoff distance
- Enhanced immunity to fluorescent lights
- Crosstalk immunity algorithm allows two sensors to be used in close proximity
- High-intensity, bright red LED spot makes sensor alignment fast and easy
- Convenient mounting options are available for 18 mm barrel or side mount
- Bright indicator LEDs show operating status from 360˚

WARNING:

- **Do not use this device for personnel protection**
- Using this device for personnel protection could result in serious injury or death.
- This device does not include the self-checking redundant circuitry necessary to allow its use in personnel safety applications. A device failure or malfunction can cause either an energized (on) or de-energized (off) output condition.

Models

IO-Link models

Model	Output Type	Sensing Range	Connection
QS18K6AF250Q5	IO-Link	Adjustable Cutoff: 30 mm to 250 mm	150 mm cable with a 4-pin M12 male quick disconnect (QD)
QS18K6AF250Q7			4-pin M8 male QD
QS18K6AF250Q8			4-pin M12 male QD
QS18K6AF120Q		Adjustable Cutoff: 30 mm to 120 mm	150 mm cable with a 4-pin M8 male QD
QS18K6AF120Q5			150 mm cable with a 4-pin M12 male QD
QS18K6AF120Q8			4-pin M12 male QD

Complementary NPN and PNP models

Model	Output Type	Sensing Range	Connection
QS18VN6AF250	Complementary NPN	Adjustable Cutoff: 30 mm to 250 mm	2 m (6.5 ft) cable
QS18VP6AF250	Complementary PNP		2 m (6.5 ft) cable
QS18VN6AF120	Complementary NPN	Adjustable Cutoff: 30 mm to 120 mm	2 m (6.5 ft) cable
QS18VP6AF120	Complementary PNP		2 m (6.5 ft) cable

© Banner Engineering Corp. All rights reserved.
www.bannerengineering.com

The following connection options are available only for the Complementary NPN/PNP models. All available connection options for the IO-Link models are listed in the IO-Link models table.

- To order the 150 mm (6 in) PVC cable model with a 4-pin M8 quick disconnect, add the suffix "Q" to the model number. For example, QS18VN6AF250Q.
- To order the 150 mm (6 in) PVC cable model with a 4-pin M12 quick disconnect, add the suffix "Q5" to the model number. For example, QS18VN6AF250Q5.
- To order the 4-pin M8 integral quick disconnect model, add the suffix "Q7" to the model number. For example, QS18VN6AF250Q7.
- To order the 4-pin M12 integral quick disconnect model, add the suffix "Q8" to the model number. For example, QS18VN6AF250Q8.

Models with a quick disconnect require a mating cordset.

For a list of discontinued models, see Discontinued Models.

Overview

The WORLD-BEAM QS18AF250 Series Sensor detects targets within the cutoff distance while ignoring objects in the background. Background suppression mode is recommended when target position is repeatable, but target color and background conditions vary.

1 Green LED: Power Indicator
2 Amber LED: Light Sensed Indicator (Flashes for Marginal Conditions)
3 Cutoff Point Adjustment Potentiometer

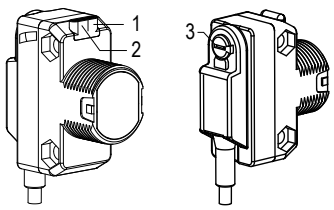

Specifications

Supply Voltage

10 V DC to 30 V DC (10% maximum ripple within specified limits)

Maximum Power Consumption (exclusive of load)

AF120 Models less than 300 mW

AF250 Models less than 475 mW

Sensing Beam

Visible red LED, 640 nm

Supply Protection Circuitry

Protected against reverse polarity and transient voltages

Output Configuration

Solid-state complementary: NPN or PNP, or push/pull, depending on model

Rating: 50 mA per output

Output Voltage High: Greater than Vsupply - 2.5 V

Output Voltage Low: Less than 2.5 V

For loads less than 1 Meg Ohm

Protected against false pulse on power-up and continuous overload or short circuit of outputs

Output Response

1.7 milliseconds ON; 1.1 milliseconds OFF

Note: 200-millisecond delay on power-up; outputs do not conduct during this time

Adjustments

Single-turn adjustment potentiometer sets the cutoff distance between minimum and maximum positions

Repeatability

130 µs (standard mode)

Indicators

Two LED indicators on sensor top:

Green solid: Power on

Amber: Light sensed

Amber flashing: Marginal sensing condition

Construction

ABS housing, acrylic lens cover, nickel-plated brass connector, acetal adjustment pot

Connections

2 m (6.5 ft) unterminated 4-wire PVC-jacketed cable; 9 m (30 ft) unterminated 4-wire PVC-jacketed cable; 150 mm (6 in) PVC-jacketed cable with a 4-pin M8 male quick-disconnect connector; 150 mm (6 in) PVC-jacketed cable with a 4-pin M12 male quick-disconnect connector; Integral 4-pin M8 male quick-disconnect connector or Integral 4-pin M12 male quick-disconnect connector, depending on model

Models with a quick disconnect require a mating cordset

Environmental Rating

IEC IP67; NEMA 6; UL Type 1

IO-Link Interface

Supports Smart Sensor Profile: Yes

Baud Rate: 38400 bps

Process Data Widths: 16 bits

IODD Files: Provides all programming options plus additional functionality; please see the IO-Link Data Reference Guide for more details

Operating Conditions

95% relative humidity at 50 °C (non-condensing)

–40 °C to +60 °C (–40 °F to +140 °F)

© Banner Engineering Corp. All rights reserved.

Certifications

Banner Engineering BV
Park Lane, Culliganlaan 2F bus 3
1831 Diegem, BELGIUM

Turck Banner LTD Blenheim House
Blenheim Court
Wickford, Essex SS11 8YT
GREAT BRITAIN

Required Overcurrent Protection

WARNING: Electrical connections must be made by qualified personnel in accordance with local and national electrical codes and regulations.

Overcurrent protection is required to be provided by end product application per the supplied table.

Overcurrent protection may be provided with external fusing or via Current Limiting, Class 2 Power Supply.

Supply wiring leads < 24 AWG shall not be spliced.

For additional product support, go to www.bannerengineering.com.

Supply Wiring (AWG)	Required Overcurrent Protection (A)	Supply Wiring (AWG)	Required Overcurrent Protection (A)
20	5.0	26	1.0
22	3.0	28	0.8
24	2.0	30	0.5

FCC Part 15 Class A for Unintentional Radiators

This equipment has been tested and found to comply with the limits for a Class A digital device, pursuant to Part 15 of the FCC Rules. These limits are designed to provide reasonable protection against harmful interference when the equipment is operated in a commercial environment. This equipment generates, uses, and can radiate radio frequency energy and, if not installed and used in accordance with the instruction manual, may cause harmful interference to radio communications. Operation of this equipment in a residential area is likely to cause harmful interference in which case the user will be required to correct the interference at his own expense.

(Part 15.21) Any changes or modifications not expressly approved by the party responsible for compliance could void the user's authority to operate this equipment.

Industry Canada ICES-003(A)

This device complies with CAN ICES-3 (A)/NMB-3(A). Operation is subject to the following two conditions: 1) This device may not cause harmful interference; and 2) This device must accept any interference received, including interference that may cause undesired operation.

Cet appareil est conforme à la norme NMB-3(A). Le fonctionnement est soumis aux deux conditions suivantes : (1) ce dispositif ne peut pas occasionner d'interférences, et (2) il doit tolérer toute interférence, y compris celles susceptibles de provoquer un fonctionnement non souhaité du dispositif.

Performance Curves

Long Range: The minimum sensing range is 8 mm for 6% reflectivity. Short Range: The minimum sensing range is 13 mm for 6% reflectivity.

Minimum separation between object and background (Background Suppression Mode) for AF250 models

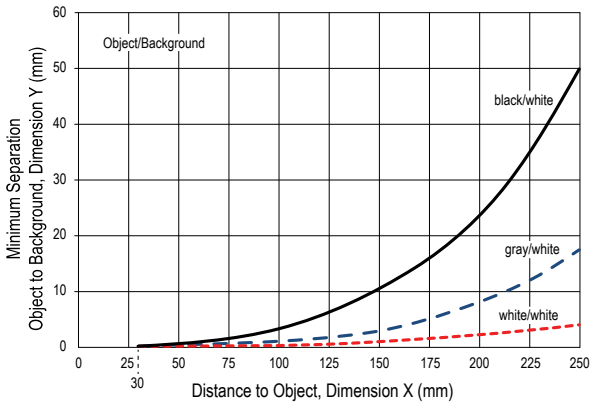

Minimum separation between object and background (Background Suppression Mode) for AF120 models

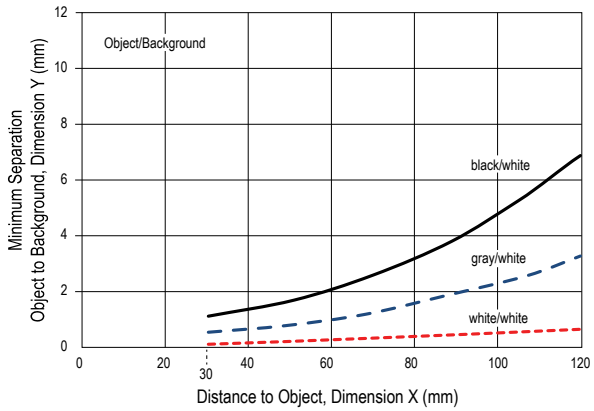

Continued on page 6

© Banner Engineering Corp. All rights reserved.
www.bannerengineering.com

Continued from page 5

Typical emitter spot diameter vs. distance for AF250 and AF120

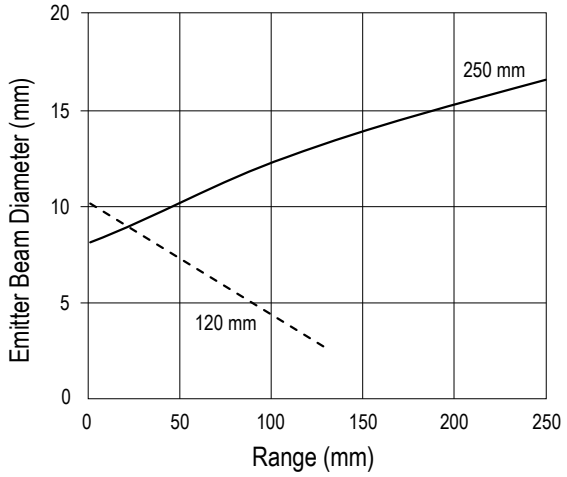

Dimensions

All measurements are listed in millimeters, unless noted otherwise. The measurements provided are subject to change.

Base dimensions for the QS18 models

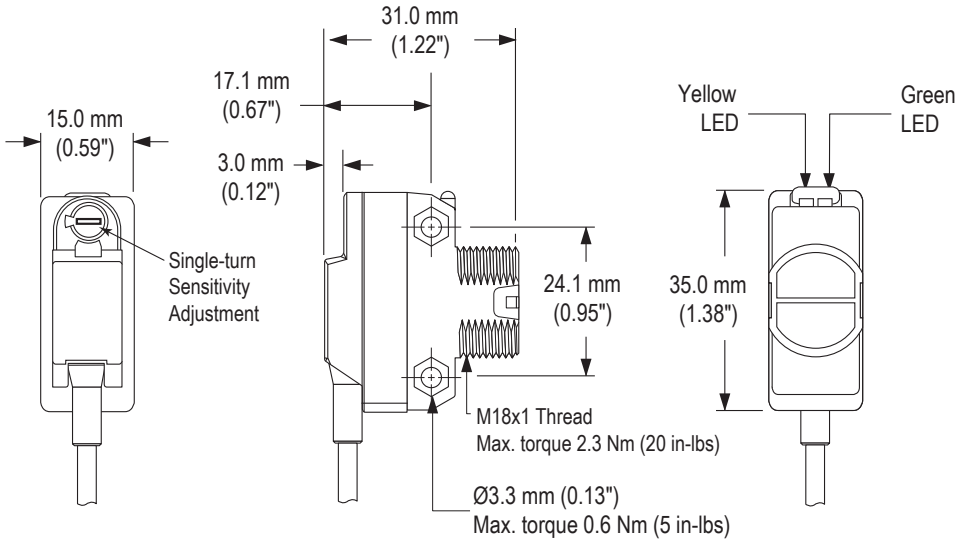

© Banner Engineering Corp. All rights reserved.

Dimensions for each connection type

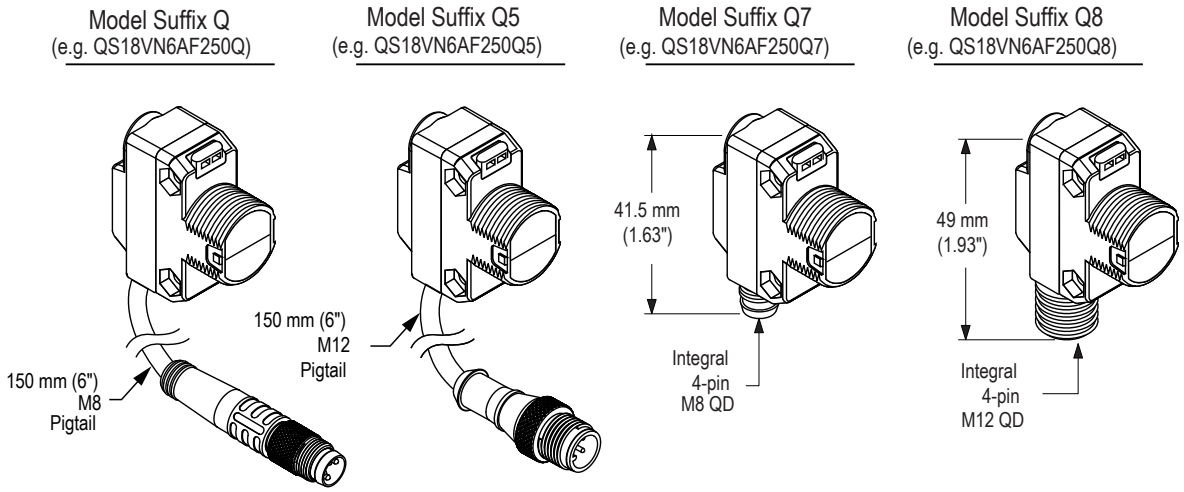

© Banner Engineering Corp. All rights reserved.
www.bannerengineering.com

Chapter Contents

Sensor Orientation 8
Wiring Diagrams 8
Sensor Setup (Background Suppression Mode) 9
IO-Link Interface 9

Chapter 2 Installation Instructions

Sensor Orientation

Optimize detection reliability and minimum object separation performance with correct sensor-to-target orientation. To ensure reliable detection, orient the sensor as shown in relation to the target to be detected.

Optimal Orientation of Target to Sensor

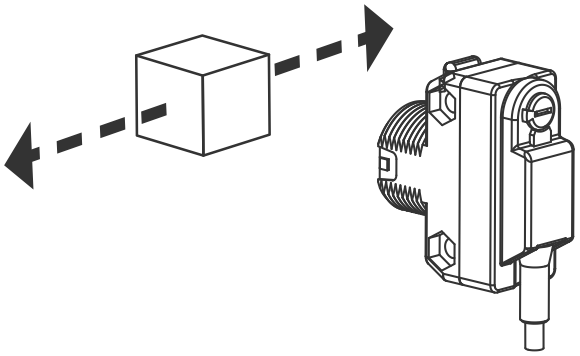

Wiring Diagrams

Cabled wiring diagrams are shown. Quick disconnect wiring diagrams are functionally identical.

NPN output

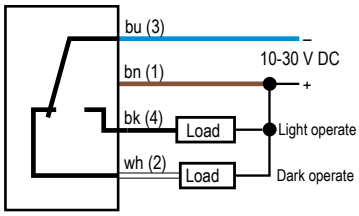

PNP output

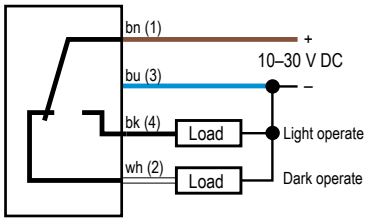

Light Operate Bipolar Outputs

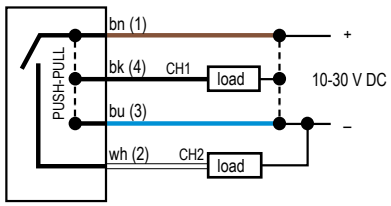

White wire: Light operate

Black wire: Configurable via IO-Link

Key

1 = Brown
2 = White
3 = Blue
4 = Black

4-pin male M12 pinout

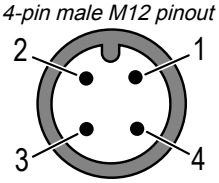

4-pin male M8 pinout

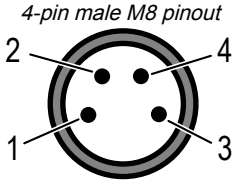

In dark operate (DO) mode, the output is ON when the target returns less light to the sensor than the configured target and OFF when the sensor detects more light than the configured/taught target.

© Banner Engineering Corp. All rights reserved.
www.bannerengineering.com

In light operate (LO) mode, the output is ON when the target returns the same or more light to the sensor and OFF when the sensor detects less light than the configured/taught target.

In **adjustable field** sensing modes, light operate is active when the target is present and dark operate is active when the target is absent.

Sensor Setup (Background Suppression Mode)

Background Suppression Mode: Objects beyond the set cutoff distance will not be detected. Background suppression mode can be used in most situations with varying object colors and positions or with varying background conditions.

To ensure reliable background suppression, a minimum separation distance between the object and the background is necessary. To determine the minimum separation distance, see Performance Curves.

1. Mount the sensor with the darkest object at the longest application distance. The distance to the object must be less than shown in "Figure: Minimum separation between object and background (Background Suppression Mode) for AF250 models" on page 5, or "Figure: Minimum separation between object and background (Background Suppression Mode) for AF120 models" on page 5 for your object color, depending on the model.
2. Turn the adjustment potentiometer counterclockwise until the yellow indicator turns off.
3. Turn the adjustment potentiometer clockwise until the yellow indicator turns on.
4. Replace the darkest object with the brightest background at the closest application distance.
5. Turn the adjustment potentiometer clockwise until the yellow indicator turns on.
6. Turn the adjustment potentiometer counterclockwise approximately half of the adjustment rotation from step 5. This places the cutoff distance approximately half-way between the object and the background switch points.
   If sufficient separation exists between the object and the background, the sensor is ready for operation.

Minimum Separation Distance

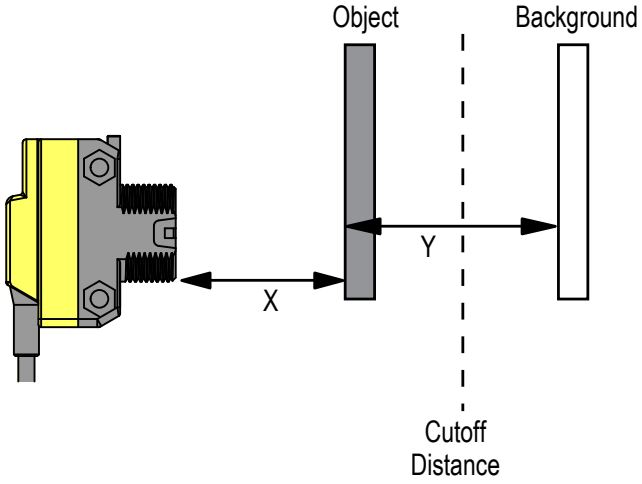

X: Distance to the Object

Y: Minimum Separation Between the Object and the Background

Set the cutoff distance approximately midway between the farthest object and the closest background

IO-Link Interface

IO-Link® [1]is a point-to-point communication link between a master device and sensor. Use IO-Link to parameterize sensors and transmit process data automatically.

For the latest IO-Link protocol and specifications, see www.io-link.com.

Each IO-Link device has an IODD (IO Device Description) file that contains information about the manufacturer, article number, functionality etc. This information can be easily read and processed by the user. Each device can be unambiguously

[1] IO-Link® is a registered trademark of PROFIBUS Nutzerorganisation e.V.

© Banner Engineering Corp. All rights reserved.

identified via the IODD as well as via an internal device ID. Download the QS18's IO-Link IODD package (p/n 206635) from Banner Engineering's website at www.bannerengineering.com.

Banner has also developed Add On Instruction (AOI) files to simplify ease-of-use between the QS18, multiple third-party vendors' IO-Link masters, and the Logix Designer software package for Rockwell Automation PLCs. Three types of AOI files for Rockwell Allen-Bradley PLCs are listed below. These files and more information can be found at www.bannerengineering.com.

Process Data AOIs—These files can be used alone, without the need for any other IO-Link AOIs. The job of a Process Data AOI is to intelligently parse out the Process Data word(s) in separate pieces of information. All that is required to make use of this AOI is an EtherNet/IP connection to the IO-Link Master and knowledge of where the Process Data registers are located for each port.

Parameter Data AOIs—These files require the use of an associated IO-Link Master AOI. The job of a Parameter Data AOI, when working in conjunction with the IO-Link Master AOI, is to provide quasi-realtime read/write access to all IO-Link parameter data in the sensor. Each Parameter Data AOI is specific to a given sensor or device.

IO-Link Master AOIs—These files require the use of one or more associated Parameter Data AOIs. The job of an IO-Link Master AOI is to translate the desired IO-Link read/write requests, made by the Parameter Data AOI, into the format a specific IO-Link Master requires. Each IO-Link Master AOI is customized for a given brand of IO-Link Master.

Add and configure the relevant Banner IO-Link Master AOI in your ladder logic program first; then add and configure Banner IO-Link Device AOIs as desired, linking them to the Master AOI as shown in the relevant AOI documentation.

© Banner Engineering Corp. All rights reserved.

Chapter Contents

Brackets 11
Cordsets 12

Chapter 3 Accessories

Brackets

SMB18A

- Right-angle mounting bracket with a curved slot for versatile orientation
- 12-ga. stainless steel
- 18 mm sensor mounting hole
- Clearance for M4 (#8) hardware
- CAD Files: DXF, PDF, IGS, STP

Hole center spacing: A to B = 24.2
Hole size: A = ø 4.6, B = 17.0 × 4.6, C = ø 18.5

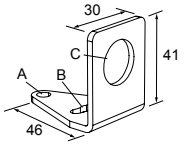

SMBQS18Y

- Die-cast bracket for 18 mm holes
- Includes metal hex nut and lock washer
- Allows ± 8° for cabled sensors
- CAD Files: DXF, PDF, IGS, STP

Hole size: A = ø 15.3

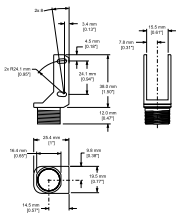

SMBQ4X..

- Swivel bracket with tilt and pan movement for precision adjustment
- Easy sensor mounting to extruded rail T-slots
- Metric and inch size bolts are available
- Side mounting of some sensors with the 3 mm screws included with the sensor
- SMBQ4XFA CAD Files: DXF, PDF, IGS, STP
- SMBQ4XFAM10 CAD Files: DXF, PDF, IGS, STP

B = 7 × M3 × 0.5
Bolt thread (A): 3/8 - 16 × 2¼ in for SMBQ4XFA; M10 - 1.5 × 50 for SMBQ4XFAM10; n/a; no bolt included. Mounts directly to 12 mm (½ in) rods for SMBQ4XFMA1

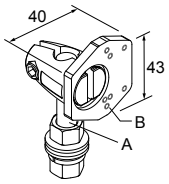

SMB18AFA..

- Protective, swivel bracket with tilt and pan movement for precision adjustment
- Easy sensor mounting to extruded rail T-slots
- Metric and inch size bolts available
- Mounting hole for 18 mm sensors

Hole size: B = ø 18.1

Bolt Thread (A):

SMB18AFA = 3/8 - 16 × 2 in
CAD Files: DXF, PDF, IGS, STP
SMB18AFAM10 = M10 - 1.5 × 50
CAD Files: IGS, STP

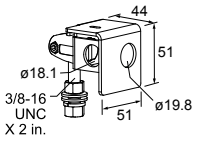

Continued on page 12

© Banner Engineering Corp. All rights reserved.
www.bannerengineering.com

Continued from page 11

SMB312S

- Stainless steel 2-axis, side-mount bracket
- CAD Files: DXF, PDF, IGS, STP

A = 4.3 × 7.5, B = diam. 3, C = 3 × 15.3

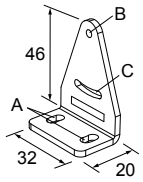

Cordsets

Use the M12 cordsets with the QS18 models with an M12 quick disconnect connector. Use the M8 cordsets with the QS18 models with an M8 QD.

4-pin Single-Ended M12 Female Cordsets (datasheet p/n 235937)				
Model	**Length**	**Dimensions (mm)**	**Pinout (Female)**	
BC-M12F4-22-1	1 m (3.28 ft)	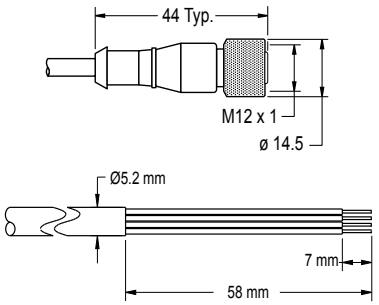	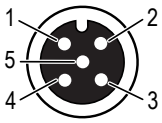	1 = Brown 2 = White 3 = Blue 4 = Black 5 = Unused
BC-M12F4-22-2	2 m (6.56 ft)			
BC-M12F4-22-5	5 m (16.4 ft)			
BC-M12F4-22-8	8 m (26.25 ft)			
BC-M12F4-22-10	10 m (30.81 ft)			
BC-M12F4-22-15	15 m (49.2 ft)			
BC-M12F4-22-20	20 m (65.61 ft)			
BC-M12F4-22-25	25 m (82.02 ft)			
BC-M12F4-22-30	30 m (98.42 ft)			

4-pin Single-Ended M12 Female Right-Angle Cordsets (datasheet p/n 235937)				
Model	**Length**	**Dimensions (mm)**	**Pinout (Female)**	
BC-M12F4A-22-1	1 m (3.28 ft)	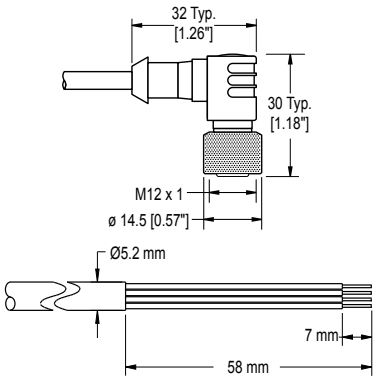	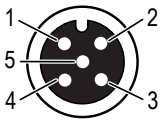	1 = Brown 2 = White 3 = Blue 4 = Black 5 = Unused
BC-M12F4A-22-2	2 m (6.56 ft)			
BC-M12F4A-22-5	5 m (16.4 ft)			
BC-M12F4A-22-8	8 m (26.25 ft)			
BC-M12F4A-22-10	10 m (30.81 ft)			
BC-M12F4A-22-15	15 m (49.2 ft)			

© Banner Engineering Corp. All rights reserved.
www.bannerengineering.com

4-pin Single-Ended M8 Female Cordsets (datasheet p/n 236623)				
Model	**Length**	**Dimensions (mm)**	**Pinout (Female)**	
BC-M8F4-24-0.5	0.5 m (1.64 ft)	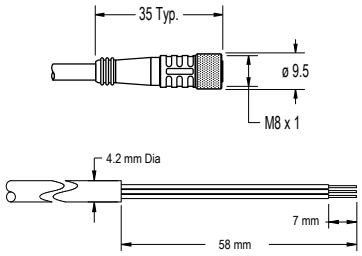	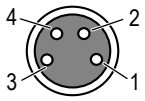	1 = Brown 2 = White 3 = Blue 4 = Black
BC-M8F4-24-1	1 m (3.28 ft)			
BC-M8F4-24-2	2 m (6.56 ft)			
BC-M8F4-24-5	5 m (16.4 ft)			
BC-M8F4-24-8	8 m (26.25 ft)			
BC-M8F4-24-10	10 m (30.81 ft)			

© Banner Engineering Corp. All rights reserved.
www.bannerengineering.com

Chapter Contents

Clean Sensor with Compressed Air Then Isopropyl Alcohol 14
Repairs and Translations (No Field-Replaceable Parts) 14
Discontinued Models 16
Contact Us 17
Banner Engineering Corp Limited Warranty 17

Chapter 4 Product Support and Maintenance

Clean Sensor with Compressed Air Then Isopropyl Alcohol

Handle the sensor with care during installation and operation. Sensor windows soiled by fingerprints, dust, water, oil, etc. create stray light that may degrade the peak performance of the sensor.

Blow dust from the sensor using filtered, compressed air. If the sensor is still dirty, gently wipe the sensor with a dry optical cloth. If the dry optical cloth does not remove all residue, use 70% isopropyl alcohol on a clean optical cloth, then dry with a clean dry optical cloth and blow with filtered, compressed air. Do not use any other chemicals for cleaning.

Repairs and Translations (No Field-Replaceable Parts)

English

Contact Banner Engineering for troubleshooting of this device. **Do not attempt any repairs to this Banner device; it contains no field-replaceable parts or components.** If the device, device part, or device component is determined to be defective by a Banner Applications Engineer, they will advise you of Banner's RMA (Return Merchandise Authorization) procedure.

```
IMPORTANT: If instructed to return the device, pack it with care. Damage that occurs in return
shipping is not covered by warranty.
```

Obtain assistance with product repairs by contacting your local Banner Engineering Corp distributor or by calling Banner directly at (763) 544-3164. Access literature translated into your native language on the Banner website at www.bannerengineering.com or contact Banner directly at (763) 544-3164.

Deutsch

Wenden Sie sich zur Fehlerbehebung dieses Geräts an Banner Engineering. **Versuchen Sie nicht, Reparaturen an diesem Banner-Gerät vorzunehmen. Das Gerät enthält keine am Einsatzort auszuwechselnden Teile oder Komponenten.** Wenn ein Banner-Anwendungstechniker zu dem Schluss kommt, dass dieses Gerät, ein Teil oder eine Komponente davon defekt ist, erhalten Sie von dem Techniker Erläuterungen zu Banners RMA-Verfahren (Return Merchandise Authorization) für die Warenrückgabe.

```
WICHTIG: Wenn Sie der Techniker anweist, das Gerät zurückzusenden, verpacken Sie es bitte
sorgfältig. Transportschäden bei der Rücksendung werden von der Garantie nicht abgedeckt.
```

Unterstützung bei Produktreparaturen erhalten Sie von Ihrem örtlichen Banner Engineering Corp Händler oder direkt von Banner unter Tel. (763) 544-3164. Die in Ihre Muttersprache übersetzte Literatur finden Sie auf der Banner-Website unter www.bannerengineering.com oder kontaktieren Sie Banner direkt unter Tel. (763) 544-3164.

Français

Pour plus d'informations sur le dépannage du produit, contactez Banner Engineering. **Ne tentez pas de réparer ce dispositif Banner. Il ne contient aucun composant ou pièce qui puisse être remplacé sur place.** Si un ingénieur de Banner conclut que le dispositif ou l'une de ses pièces ou composants est défectueux, il vous informera de la procédure à suivre pour le retour des produits (RMA).

```
Important : Si vous devez retourner le dispositif, emballez-le avec soin. Les dégâts
occasionnés pendant le transport de retour ne sont pas couverts par la garantie.
```

Pour vous aider lors de la réparation de produits, contactez votre distributeur Banner local our appelez directement Banner au (763) 544-3164. La documentation traduite dans votre langue est disponible sur le site internet de Banner www.bannerengineering.com ou contactez directement Banner au (763) 544-3164.

© Banner Engineering Corp. All rights reserved.
www.bannerengineering.com

Italiano

Per le procedure di individuazione e riparazione dei guasti di questo dispositivo, contattare Banner Engineering. **Non tentare di riparare questo dispositivo Banner, in quanto non contiene parti o componenti sostituibili dall'utente.** Se il dispositivo, una parte del dispositivo o un componente del dispositivo viene riscontrato difettoso da un tecnico Banner, il nostro personale vi comunicherà la procedura da seguire per ottenere l'autorizzazione al reso.

> **Importante:** Se si ricevono istruzioni di rispedire il dispositivo al produttore, imballarlo con cura. I danni dovuti al trasporto non sono coperti dalla garanzia.

Per assistenza nelle riparazioni dei prodotti, contattare il distributore locale Banner Engineering Corp o contattare direttamente Banner al numero (763) 544-3164. È possibile accedere alla documentazione tradotta nella propria lingua madre sul sito Web Banner all'indirizzo www.bannerengineering.com o contattare direttamente Banner al numero (763) 544-3164.

Español

Comuníquese con Banner Engineering para solucionar de problemas de este dispositivo. **No intente ninguna reparación a este dispositivo de Banner, contiene piezas o componente que no se pueden cambiar en terreno.** Si algún ingeniero de aplicaciones de Banner determina que el dispositivo, alguna de las piezas o alguno de los componentes del dispositivo está defectuoso, le informará el procedimiento de autorización de devolución de mercancía (RMA, por sus siglas en inglés) de Banner.

> **Importante:** Si se le solicita devolver el dispositivo, empáquelo con cuidado. Puede haber daños durante el envío de devolución que no estén cubiertos por la garantía.

Para reparaciones de productos, por favor contacte a su distribuidor local de Banner Engineering o llame a Banner directamente al 00 1 (763) 544-3164. Vea la literatura traducida en su idioma en el sitio web Banner en www.bannerengineering.com o comuníquese con Banner directamente al 00 1 (763) 544-3164.

中国人

如需对本装置进行故障排查，请联系邦纳。**请勿尝试自行维修该邦纳装置；本装置不包含任何可在现场更换的部件或组件。** 若经邦纳应用工程师确认设备、设备部件或组件存在缺陷，他们将告知您邦纳退货授权 (RMA) 流程。

> **重要注意事项：** 如被要求退回装置，请妥善包装后寄回。退货运输过程中发生的损坏不在保修范围内。

请联系当地的 Banner Engineering Corp 经销商或直接致电 Banner +1 (763) 544-3164，以获得产品维修帮助。请访问邦纳网站 www.bannerengineering.com 或直接拨打 +1 (763) 544-3164 联系邦纳，获取翻译成您母语的资料。

한국인

이 장치의 문제를 해결하려면 Banner Engineering에 문의하십시오. **이 Banner 장치에는 현장에서 교체할 수 있는 부품 또는 구성품이 없으므로 수리를 시도하지 마십시오.** Banner 애플리케이션 엔지니어가 장치, 장치 부품 또는 장치 구성품에 결함이 있는 것으로 판정하면, Banner의 RMA(제품 반송 승인)절차에 대해 안내해 드립니다.

> **중요:** 제품을 반송하도록 안내 받으셨다면 잘 포장해주십시오. 반송 도중에 발생한 손상은 보증 서비스가 적용되지 않습니다.

제품 수리에 대한 지원은 지역 Banner Engineering Corp 대리점에 문의하거나 Banner에 직접 (763) 544-3164로 문의하실 수 있습니다. 사용자의 모국어로 번역된 자료는 Banner 웹사이트 www.bannerengineering.com에서 액세스하거나 Banner에 직접 (763) 544-3164로 문의하실 수 있습니다.

日本語

この装置のトラブルシューティングについては、バナーエンジニアリングにお問い合わせください。**このバナー装置には、現場では交換できない部品またはコンポーネントが含まれているため、修理を試みてはいけません。** バナーのアプリケーションエンジニアが装置、装置の部品、または装置のコンポーネントに欠陥があると判断した場合、バナーのRMA（返品承認）手続きについてお知らせします。

> **重要 ：** 返品を指示された場合は、装置を丁寧に梱包してください。返品時に発生した破損は保証の対象外となります。

製品の修理については、最寄りのBanner Engineering Corp代理店にお問い合わせいただくか、米国+1 (763) 544-3164まで直接お電話でお問い合わせください。バナーのウェブサイト（www.bannerengineering.com）でお客様の言語に翻訳された資料にアクセスするか、米国+1 (763) 544-3164まで直接お電話でお問い合わせください。

© Banner Engineering Corp. All rights reserved.
www.bannerengineering.com

čeština

Pro řešení problémů se zařízením kontaktujte společnost Banner Engineering. **Neprovádějte žádné opravy zařízení Banner. Neobsahují žádné komponenty nebo části, které by byly vyměnitelné.** Pokud je zařízení, jeho část nebo díl označen technikem společnosti Banner jako poškozený, bude Vám doporučeno vyplnit reklamační RMA protokol.

Důležité: Pokud byl vydán požadavek na vrácení zařízení, pečlivě ho zabalte. Poškození vzniklé při dopravě není považováno za záruční opravu.

Pokud produkt potřebuje opravu, vyžádejte si pomoc od místního distributora společnosti Banner Engineering Corp nebo přímo na telefonním čísle (763) 544-3164. Dokumentaci přeloženou do vašeho jazyka si vyhledejte na webových stránkách společnosti Banner na adrese www.bannerengineering.com nebo se obraťte přímo na společnost Banner na telefonním čísle (763) 544-3164.

Polski

W celu rozwiązania problemów z urządzeniem należy skontaktować się z działem technicznym firmy Banner Engineering. **Pod żadnym pozorem nie próbuj naprawiać tego urządzenia firmy Banner; nie zawiera ono części ani elementów, które można wymieniać samodzielnie.** Jeśli urządzenie, jego część lub element zostaną uznane za wadliwe przez inżyniera technicznego Banner, poinformuje on użytkownika o firmowej procedurze zwrotu towaru (RMA) firmy Banner.

Ważne: Jeśli urządzenie ma zostać zwrócone, należy je starannie zapakować. Uszkodzenia powstałe podczas odsyłki nie są objęte gwarancją.

Aby uzyskać pomoc w zakresie naprawy produktu, należy skontaktować się z lokalnym dystrybutorem Banner Engineering Corp lub zadzwonić bezpośrednio do firmy Banner pod numer (763) 544-3164. Dostęp do literatury przetłumaczonej na swój język ojczysty można uzyskać na stronie internetowej firmy Banner pod adresem www.bannerengineering.com lub kontaktując się bezpośrednio z firmą Banner pod numerem (763) 544-3164.

Português

Entre em contato com a Engenharia da Banner para a solução de problemas deste dispositivo. **Não tente fazer nenhum reparo neste dispositivo Banner; ele não contém peças ou componentes substituíveis em campo.** Se um técnico de aplicações da Banner determinar que o dispositivo, peça ou componente do dispositivo está com defeito, ele o informará sobre o procedimento de RMA (Autorização de Devolução de Mercadoria) da Banner.

Importante: Se for instruído a devolver o dispositivo, embale-o com cuidado. Os danos ocorridos no transporte de devolução não são cobertos pela garantia.

Obtenha assistência para reparos do produto entrando em contato com o distribuidor local da Banner Engineering Corp ou ligando diretamente para a Banner no telefone (763) 544-3164. Acesse a literatura traduzida para seu idioma nativo no site da Banner em www.bannerengineering.com ou entre em contato diretamente com a Banner pelo telefone (763) 544-3164.

Türkçe

Bu cihazda sorun giderme işlemleri için Banner Engineering ile iletişime geçin. **Bu Banner cihazını onarmaya çalışmayın; cihaz sahada değiştirilebilir parça veya bileşen içermez.** Bir Banner Uygulama Mühendisi tarafından cihazın, cihazın bir parçasının veya bir cihaz bileşeninin kusurlu olduğu tespit edilirse, Banner RMA (İade Mal Yetkilendirme) prosedürü hakkında bilgilendirilirsiniz.

ÖNEMLİ: İade etmeniz istenirse, cihazı dikkatli bir şekilde paketleyin. İade nakliyesinde meydana gelecek hasarlar garanti kapsamında değildir.

Yerel Banner Engineering Corp distribütörünüzle iletişime geçerek veya doğrudan (763) 544-3164 numaralı telefondan Banner'ı arayarak ürün onarımlarıyla ilgili yardım alın. Ana dilinize çevrilmiş dokümanlara www.bannerengineering.com adresindeki Banner web sitesinden erişebilir veya (763) 544-3164 numaralı telefondan doğrudan Banner ile iletişime geçebilirsiniz.

Discontinued Models

The following models are no longer available for order but are still covered by the information in this document.

Discontinued complementary NPN and PNP models

Model	Output Type	Sensing Range	Connection
QS18VN6AF250 W/30	Complementary NPN	Adjustable Cutoff: 30 mm to 250 mm	9 m cable
QS18VP6AF250 W/30	Complementary PNP		9 m cable
QS18VN6AF120 W/30	Complementary NPN	Adjustable Cutoff: 30 mm to 120 mm	9 m cable

© Banner Engineering Corp. All rights reserved.
www.bannerengineering.com

Discontinued IO-Link models

Model	Output Type	Sensing Range	Connection
QS18K6AF250Q	IO-Link	Adjustable Cutoff: 30 mm to 250 mm	150 mm cable with a 4-pin M8 male QD
QS18K6AF120Q7	IO-Link	Adjustable Cutoff: 30 mm to 120 mm	4-pin M8 male QD

Contact Us

Banner Engineering Corp. | 9714 Tenth Avenue North | Plymouth, MN 55441, USA | Phone: + 1 888 373 6767

For worldwide locations and local representatives, visit www.bannerengineering.com.

Banner Engineering Corp Limited Warranty

Banner Engineering Corp. warrants its products to be free from defects in material and workmanship for one year following the date of shipment. Banner Engineering Corp. will repair or replace, free of charge, any product of its manufacture which, at the time it is returned to the factory, is found to have been defective during the warranty period. This warranty does not cover damage or liability for misuse, abuse, or the improper application or installation of the Banner product.

THIS LIMITED WARRANTY IS EXCLUSIVE AND IN LIEU OF ALL OTHER WARRANTIES WHETHER EXPRESS OR IMPLIED (INCLUDING, WITHOUT LIMITATION, ANY WARRANTY OF MERCHANTABILITY OR FITNESS FOR A PARTICULAR PURPOSE), AND WHETHER ARISING UNDER COURSE OF PERFORMANCE, COURSE OF DEALING OR TRADE USAGE.

This Warranty is exclusive and limited to repair or, at the discretion of Banner Engineering Corp., replacement. **IN NO EVENT SHALL BANNER ENGINEERING CORP. BE LIABLE TO BUYER OR ANY OTHER PERSON OR ENTITY FOR ANY EXTRA COSTS, EXPENSES, LOSSES, LOSS OF PROFITS, OR ANY INCIDENTAL, CONSEQUENTIAL OR SPECIAL DAMAGES RESULTING FROM ANY PRODUCT DEFECT OR FROM THE USE OR INABILITY TO USE THE PRODUCT, WHETHER ARISING IN CONTRACT OR WARRANTY, STATUTE, TORT, STRICT LIABILITY, NEGLIGENCE, OR OTHERWISE.**

Banner Engineering Corp. reserves the right to change, modify or improve the design of the product without assuming any obligations or liabilities relating to any product previously manufactured by Banner Engineering Corp. Any misuse, abuse, or improper application or installation of this product or use of the product for personal protection applications when the product is identified as not intended for such purposes will void the product warranty. Any modifications to this product without prior express approval by Banner Engineering Corp will void the product warranties. All specifications published in this document are subject to change; Banner reserves the right to modify product specifications or update documentation at any time. Specifications and product information in English supersede that which is provided in any other language. For the most recent version of any documentation, refer to: www.bannerengineering.com.

For patent information, see www.bannerengineering.com/patents.

© Banner Engineering Corp. All rights reserved.
www.bannerengineering.com

LinkedIn

X

Facebook

Instagram



© 2026. All rights reserved.