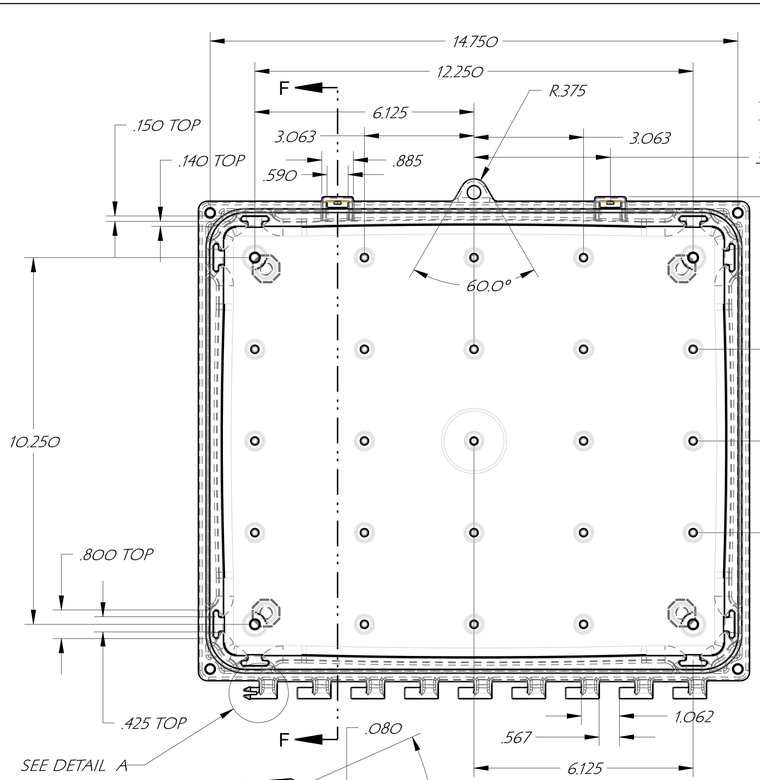

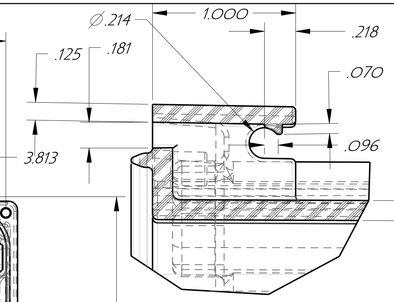

DETAIL C
SCALE 2.000

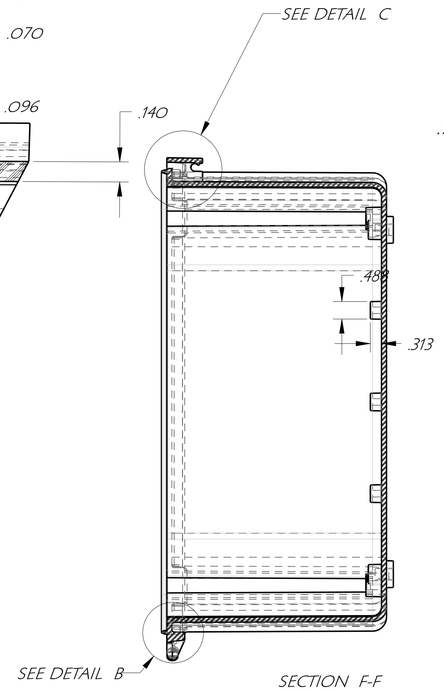

SECTION F-F

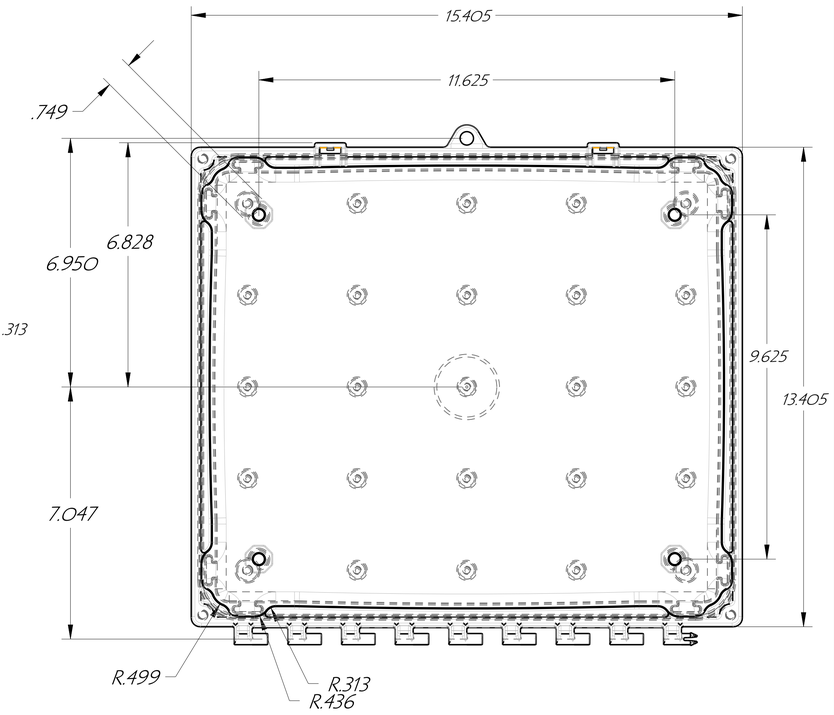

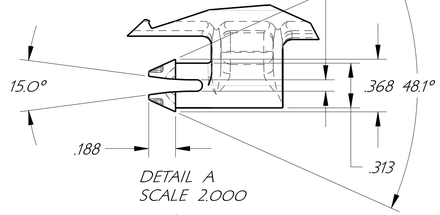

DETAIL A
SCALE 2.000

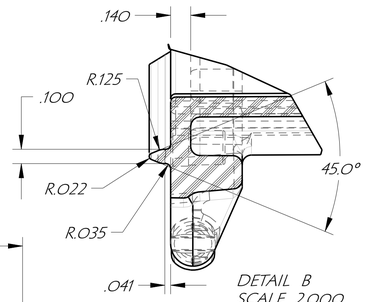

DETAIL B
SCALE 2.000

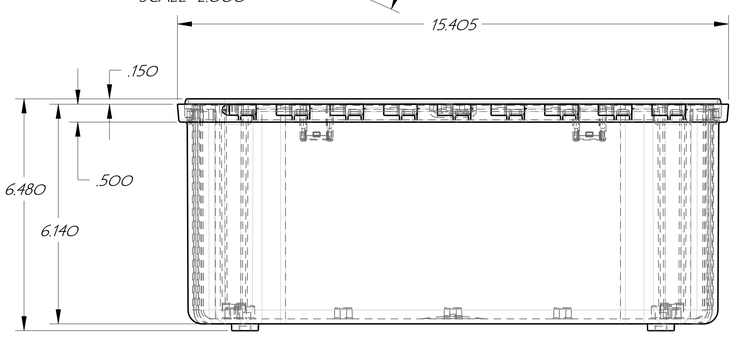

14 X 12 ENCLOSURE

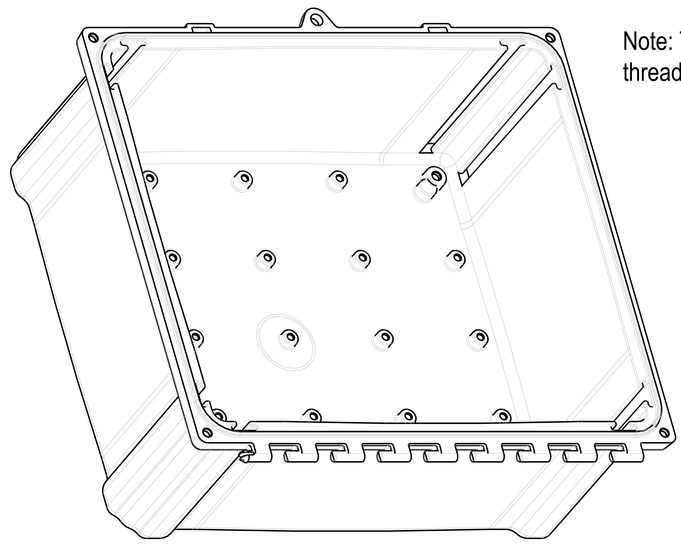

Note: Thread bosses use #10 x 3/8 Trilobular thread forming screw

DES. C.R.W.	DRN. C.R.W.	CHKD.			
APP.	DATE 10/16/07	SCALE			
TOLERANCES:	2 PLACE DEC. ±.010	FRAC. ±1/64	ATTABOX		CUSTOMER
UNLESS OTHERWISE SHOWN	3 PLACE DEC. ±.005		PART NAME ENCLOSURE & LID	PART NO.	PART MAT'L POLYCARBONATE
	4 PLACE DEC. ±.0005		TOOL DESC. SINGLE CAVITY INJECTION MOLD	SHRINK .006/IN.	SHEET OF

ПРОМЭЛЕКТРОНИКА/ sales@prom-elec.com

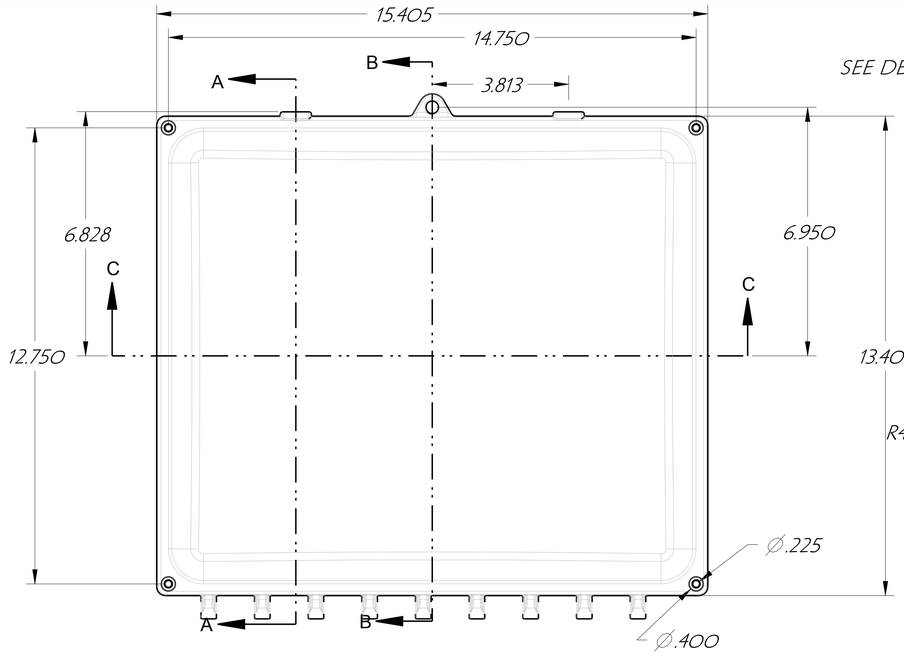

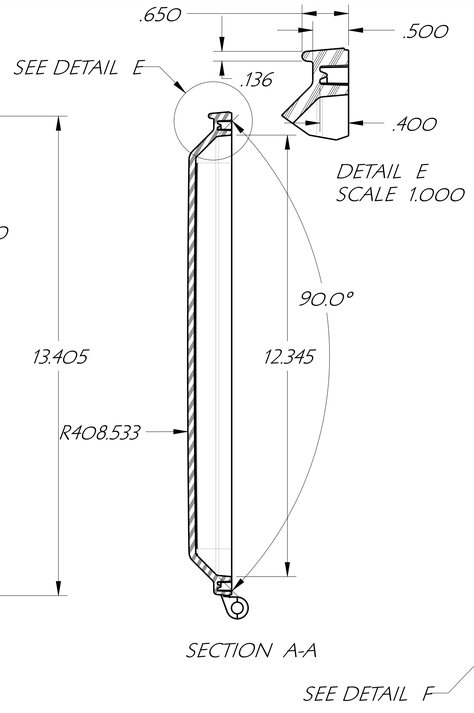

SECTION A-A

DETAIL E
SCALE 1.000

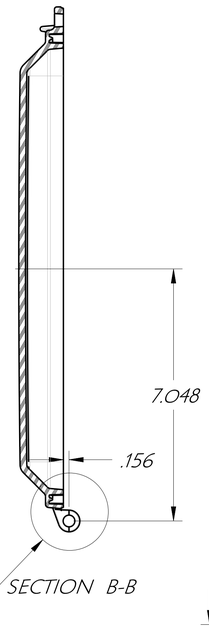

SECTION B-B

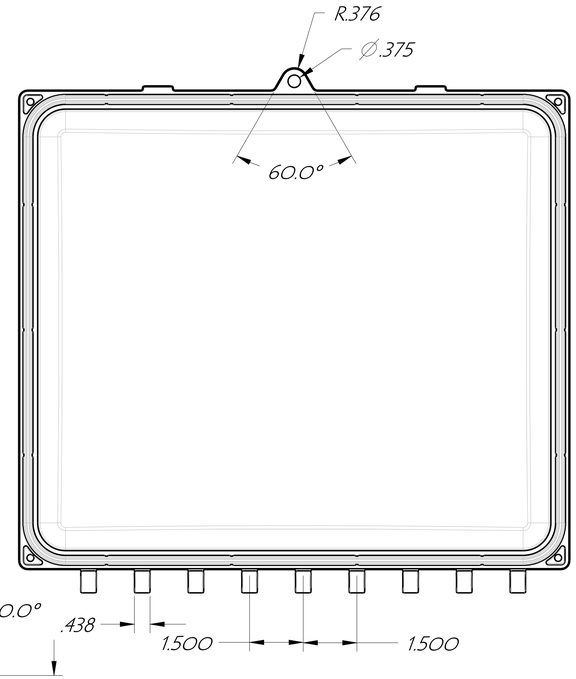

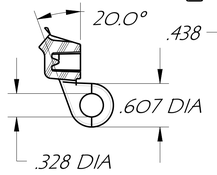

DETAIL F
SCALE 1.000

14 X 12 LID

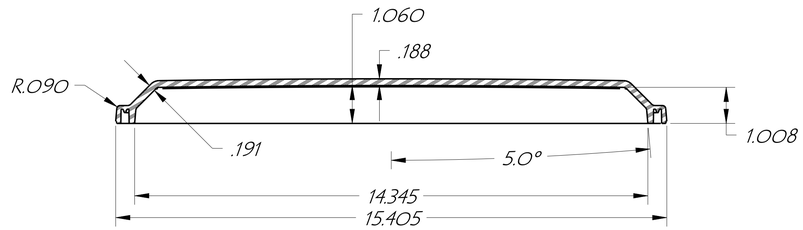

SECTION C-C

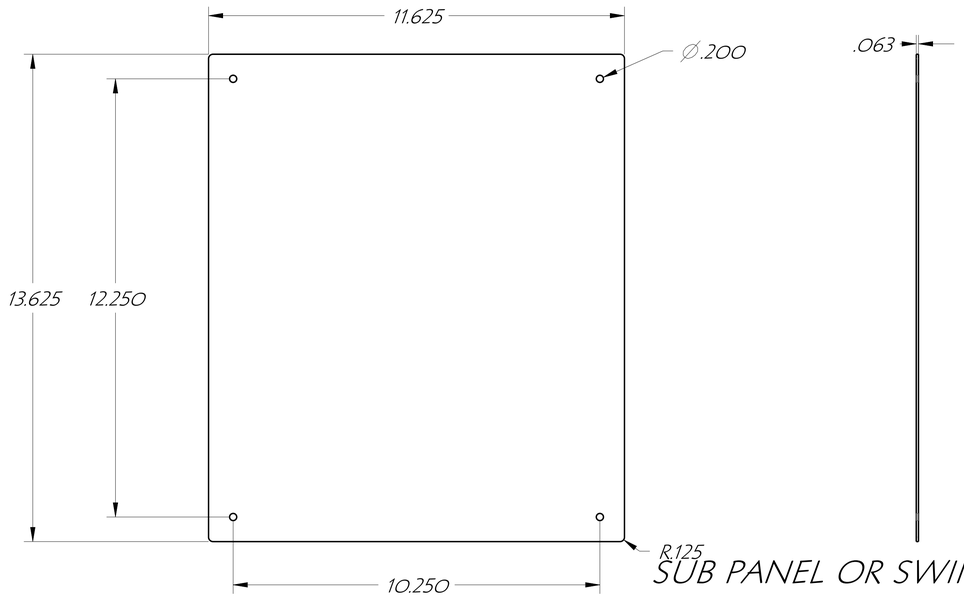

SUB PANEL OR SWING PANEL

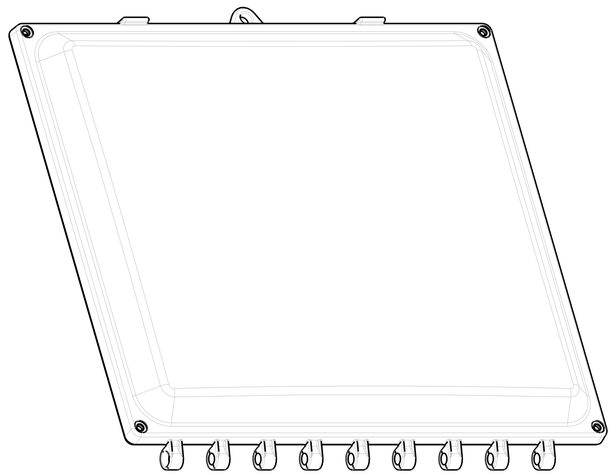

DES. C.R.W.	DRN. C.R.W.	CHKD.		ATTABOX	CUSTOMER
APP.	DATE 10/16/07	SCALE			
TOLERANCES:	2 PLACE DEC. ±.010	FRAC.	PART NAME ENCLOSURE & LID	PART NO.	PART MAT'L POLYCARBONATE
UNLESS OTHERWISE SHOWN	3 PLACE DEC. ±.005	±1/64	TOOL DESC. SINGLE CAVITY INJECTION MOLD	SHRINK .006/IN.	SHEET OF
	4 PLACE DEC. ±.0005				

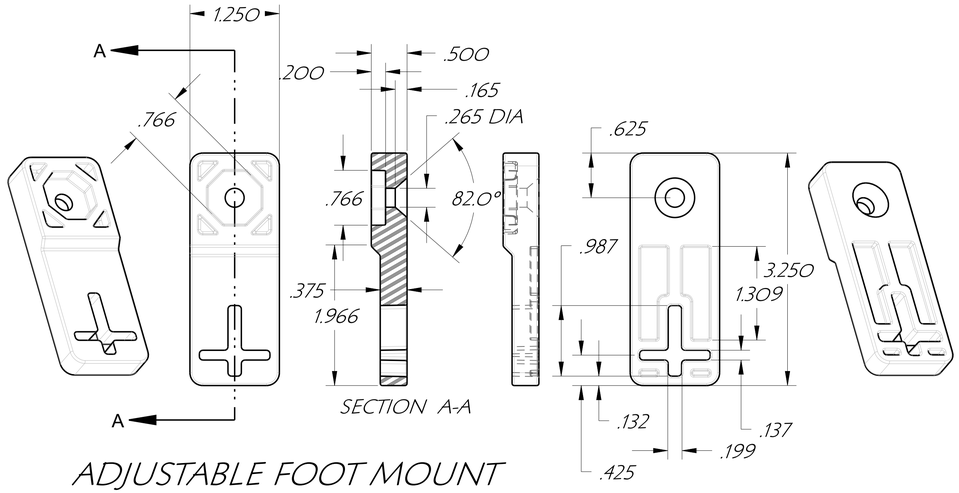

ADJUSTABLE FOOT MOUNT



LID HINGE CAP

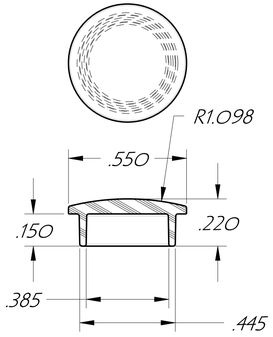

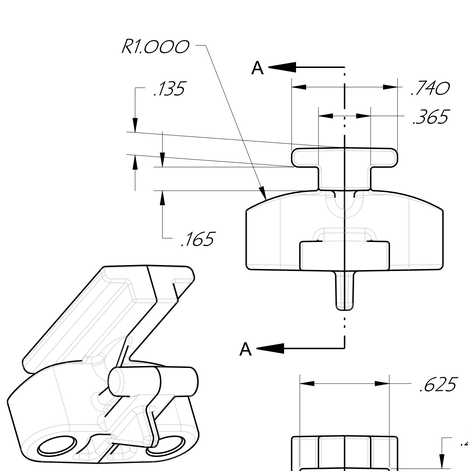

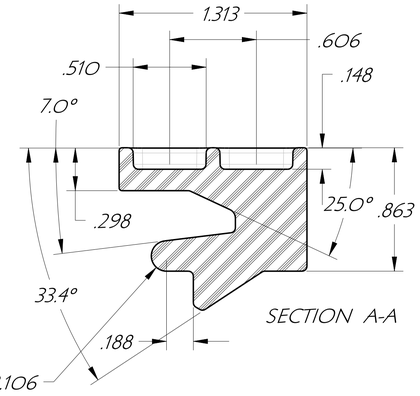

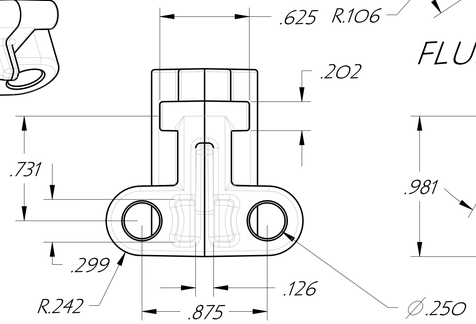

FLUSH PANEL MOUNT

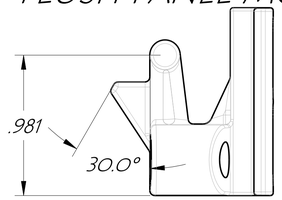

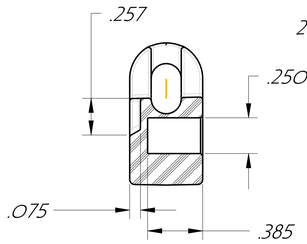

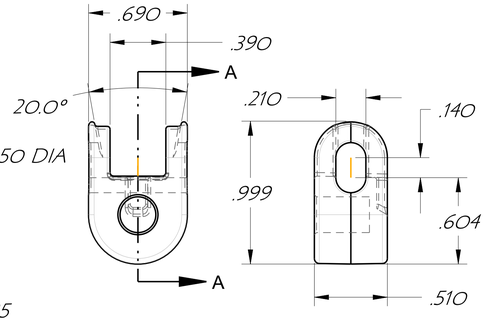

RETRACTING PANEL HINGE



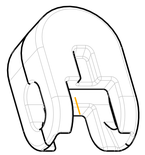

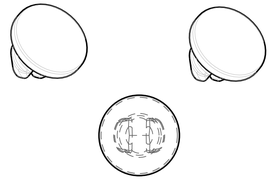

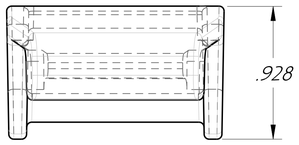

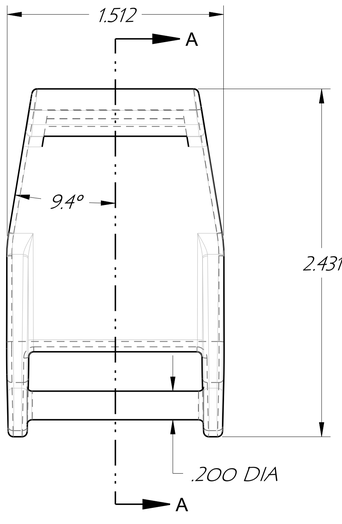

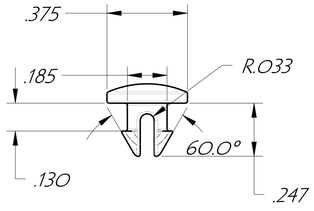

PLUG

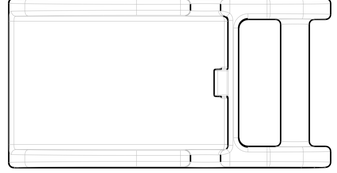

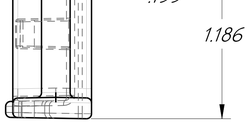

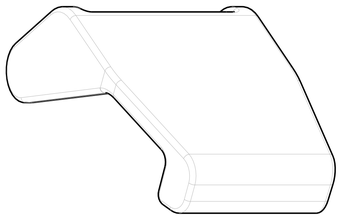

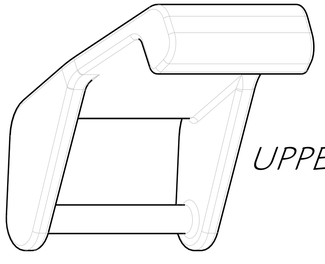

UPPER LATCH

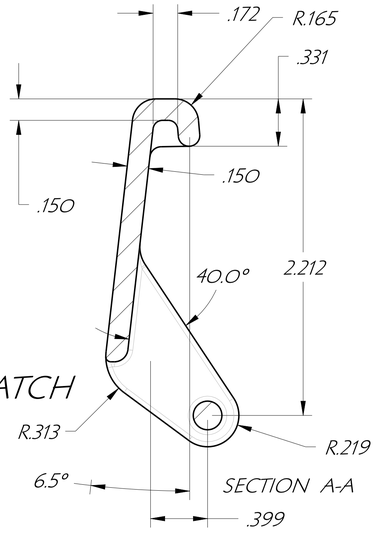

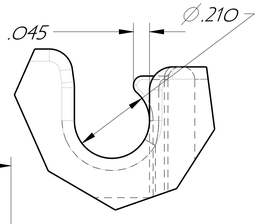

LOWER LATCH

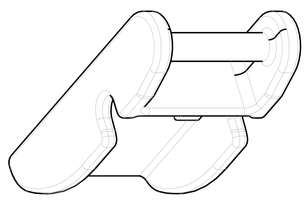

DES. C.R.W.	DRN. C.R.W.	CHKD.	ATTABOX		CUSTOMER
APP.	DATE 10/16/07	SCALE			
TOLERANCES:	2 PLACE DEC. ±.010	FRAC. ±1/64	PART NAME ENCLOSURE & LID	PART NO.	PART MAT'L POLYCARBONATE
UNLESS OTHERWISE SHOWN	3 PLACE DEC. ±.005 4 PLACE DEC. ±.0005		TOOL DESC. SINGLE CAVITY INJECTION MOLD	SHRINK .006/IN.	SHEET OF