BM.752P Series Glass Fiber

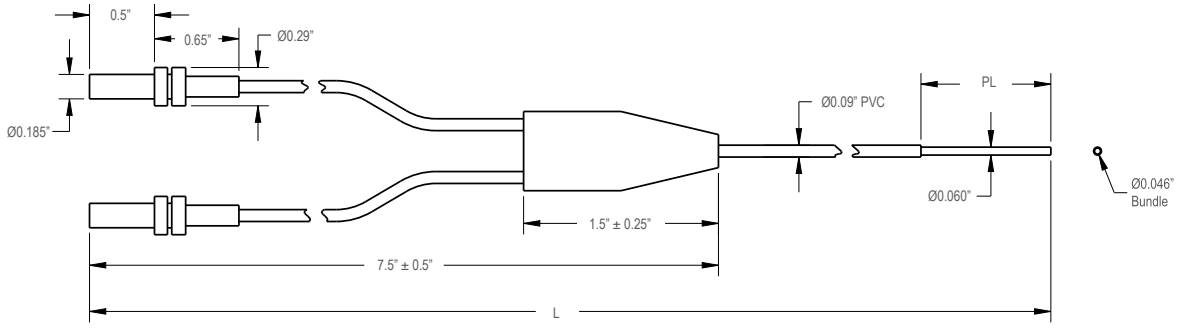

Model	L (in)	PL (in)
BM.752P	24	1

BM.752PMA.25 Series Glass Fibers

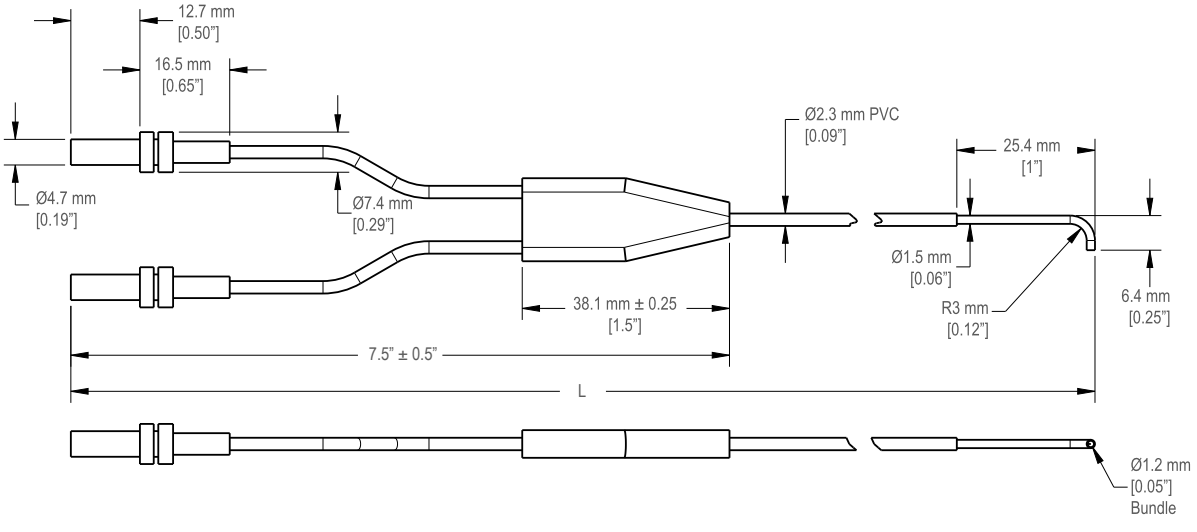

Model	CAD Files	L (mm)
BM.752PMA.25	CAD files: DXF, PDF, IGS, STP	610

Original Instructions
12-Aug-26

© Banner Engineering Corp. All rights reserved.
www.bannerengineering.com

b_51963898
p/n: b_51963898 Rev. B

ПРОМЭЛЕКТРОНИКА/ sales@prom-elec.com

BM.75xS Series Fibers

BM.75xS Series SS Terminated Glass Fibers

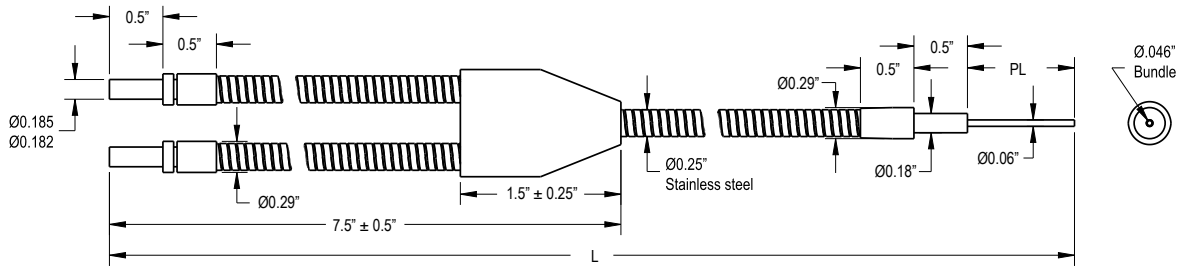

Model	CAD Files	L (in)	PL (in)
BM.752S	CAD files: DXF, PDF, IGS, STP	24	1
BM.753S		36	1
BM.753SM2		36	2
BM.754SM2		48	2

BM.752SMCTPL Series Fiberoptic Assembly

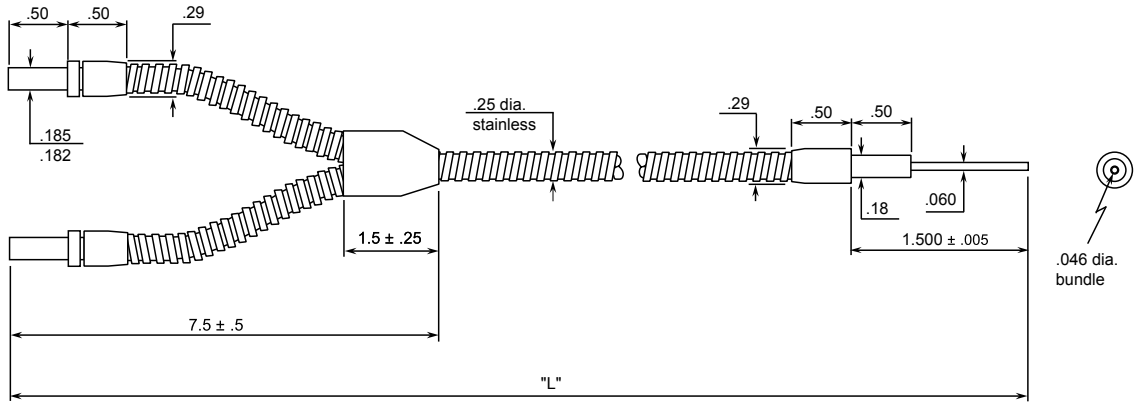

Model	CAD Files	L (in)
BM.752SMCTPL	CAD files: PDF	24

© Banner Engineering Corp. All rights reserved.
www.bannerengineering.com

BMAP Series Fibers

BMAP.442P Series Fibers

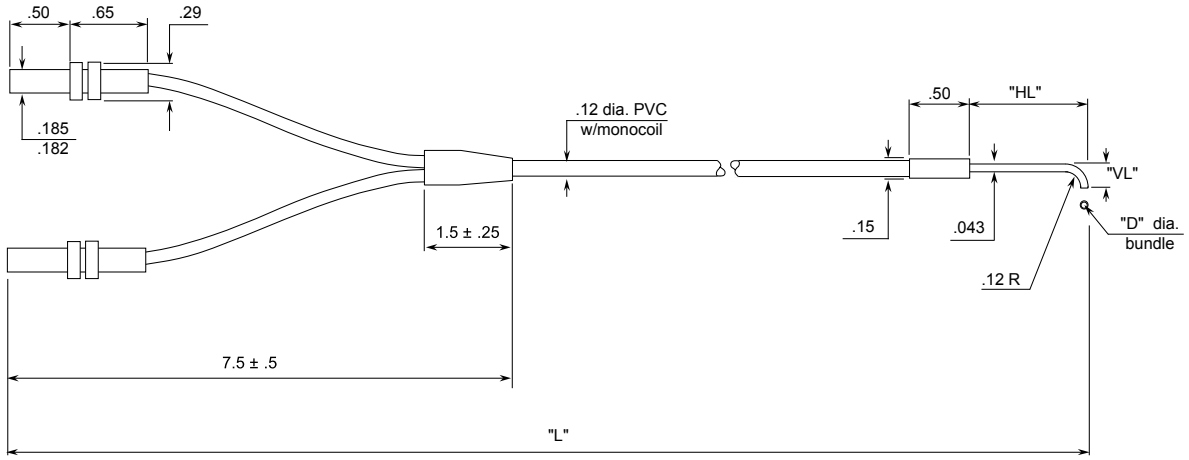

Model	CAD Files	L (in)	HL (in)	VL(in)	D (in)
BMAP.442P	CAD files: PDF	24	1	0.19	0.027

BMAP.753P Series Fibers

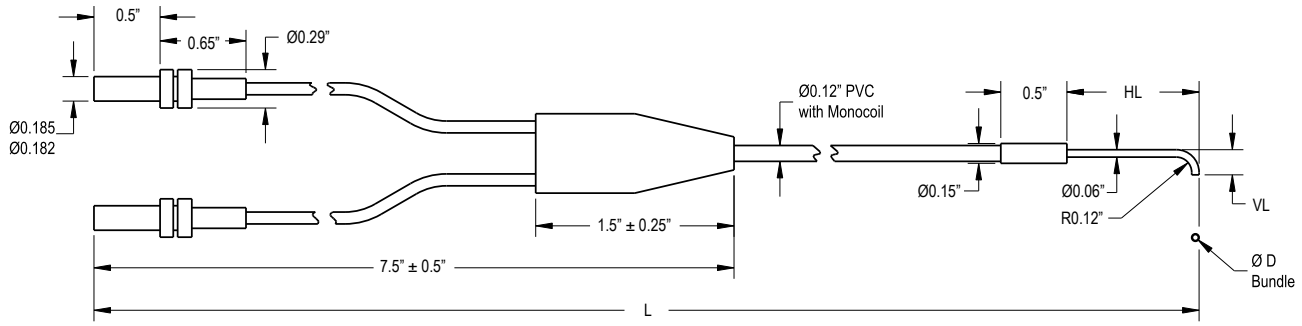

Model	CAD Files	L (in)	HL (in)	VL(in)	D (in)
BMAP.753P	CAD files: PDF	36	1	0.19	0.046
BMAP.753PM.38		36	0.38	0.19	0.046

© Banner Engineering Corp. All rights reserved.
www.bannerengineering.com

BMHAP Series Fibers

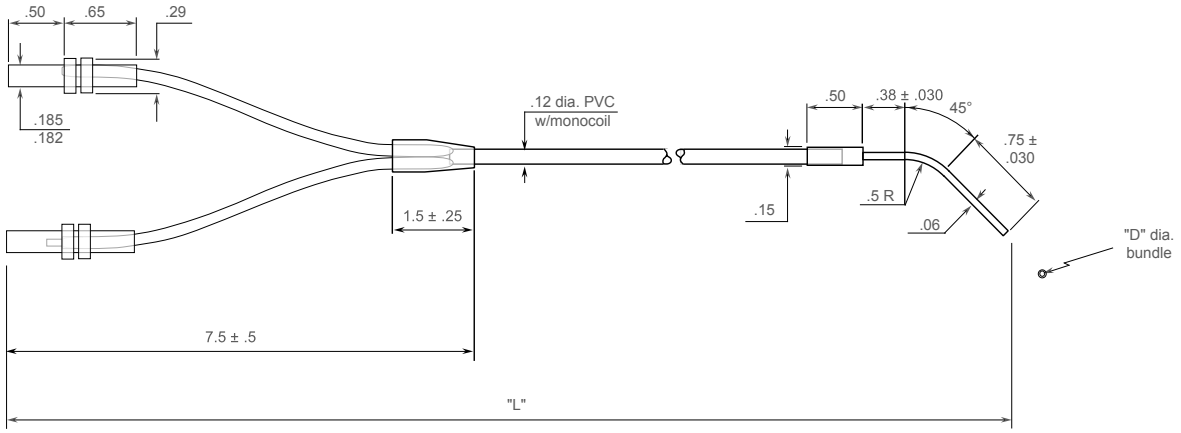

Model	CAD Files	L (in)	D(in)
BMHAP.753P	CAD files: PDF	36	0.046

BMM.44xS Fibers

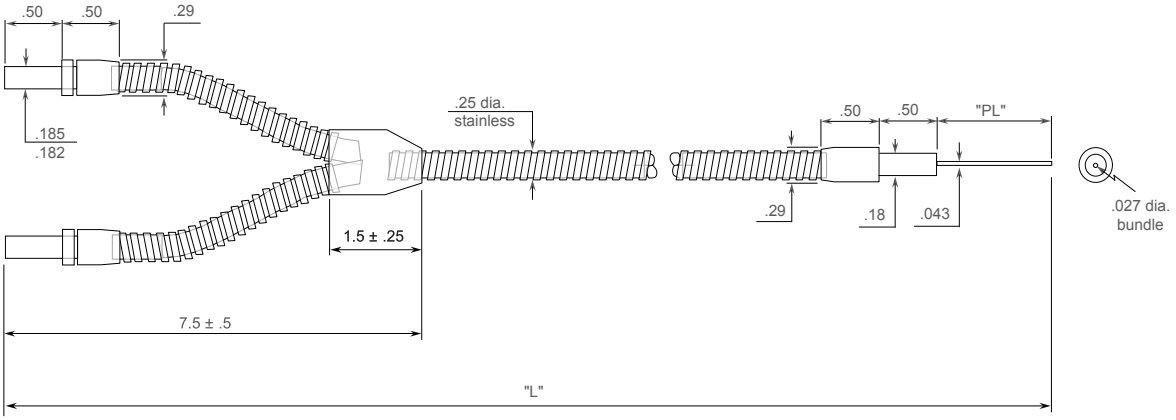

Model	CAD Files	L (in)	PL (in)
BMM.442S	CAD files: PDF	24	1
BMM.443S		36	1

© Banner Engineering Corp. All rights reserved.
www.bannerengineering.com

BMP Series Fibers

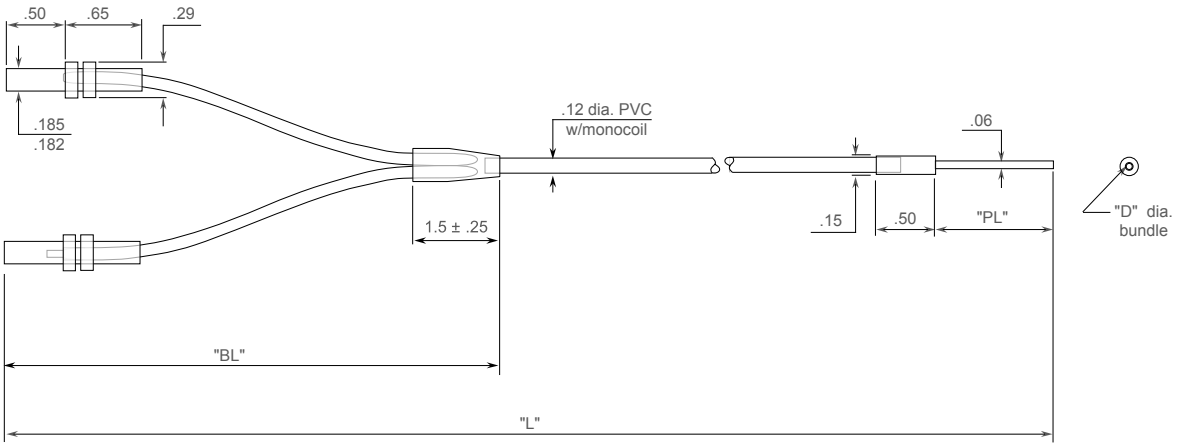

Model	CAD Files	L (in)	PL (in)	BL (in)	D (in)
BMP.753P	CAD files: PDF	36	1	7.5 ± 0.5	0.046

BMT Series Fibers

BMT.xxxP Series

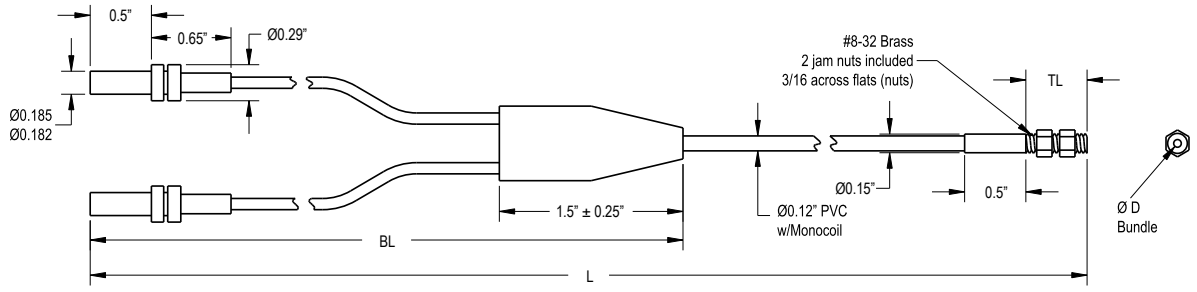

Model	CAD Files	BL (in)	TL (in)	L (in)	D (in)
BMT.442P	CAD files: PDF	7.5 ± 0.5	0.50	24	0.27
BMT.753P		7.5 ± 0.5	0.50	36	0.046

BMT.753S Series

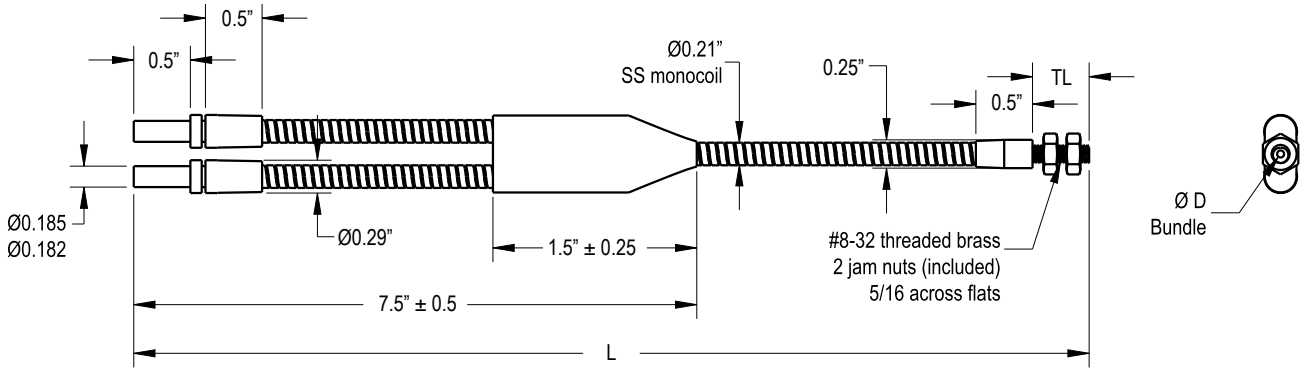

Model	CAD Files	TL (in)	L (in)	D (in)
BMT.753S	CAD files: PDF	0.50	36	0.046

© Banner Engineering Corp. All rights reserved.
www.bannerengineering.com

BMT1xxx-HT Series

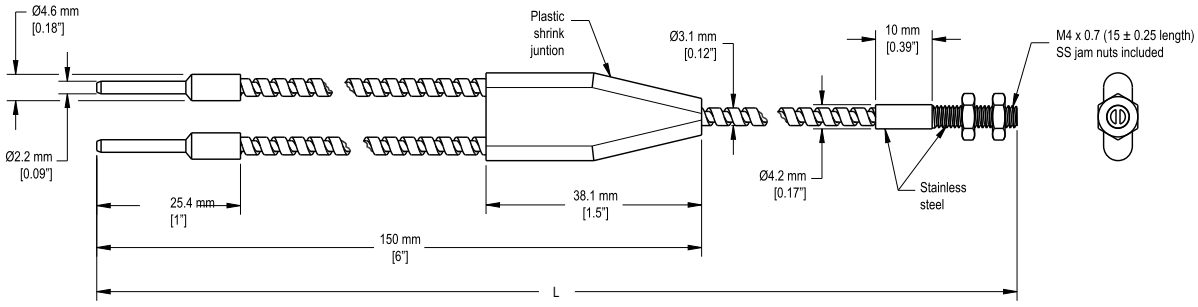

Model	CAD Files	L
BMT110S-HT	CAD files: CAD files: DXF, PDF, IGS, STP	3.048 m (120")
BMT13.33S-HT		1.016 m (40")
BMT16.6S-HT		2 m (79")

BMTAP.753P Fiber

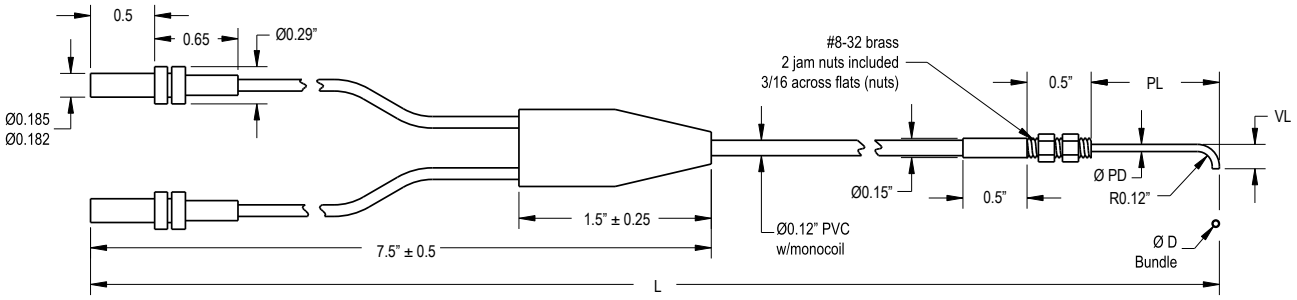

Model	CAD Files	L (in)	PL (in)	VL (in)	PD (in)	D (in)
BMTAP.753P	CAD files: PDF	36	1	0.19	0.06	0.046

© Banner Engineering Corp. All rights reserved.
www.bannerengineering.com