Technical Information

WARNING: Electrical connections must be made by qualified personnel in accordance with local and national electrical codes and regulations.

Delta

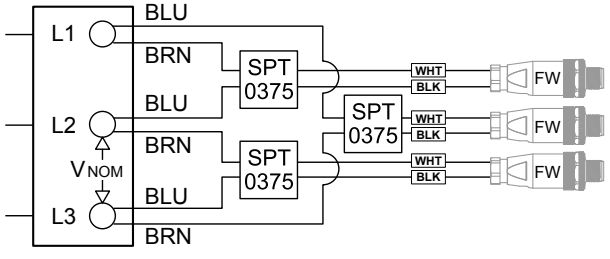

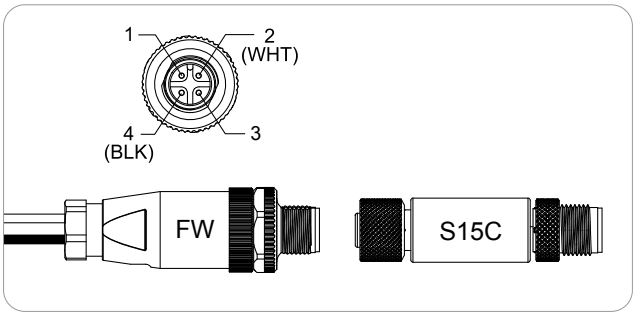

Y

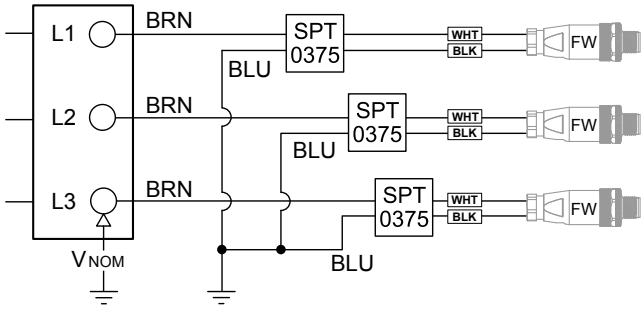

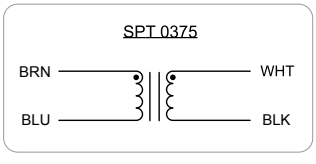

Qty	Model	Description
1	S15C-UT460-MQ	Pre-scaled voltage to Modbus® converter
1	BFW-M12M4-6X	4-pin M12 male straight field wire connector
1	SPT-0375-600	Magnelab Transformer, 460 V input, 0.333 output

For detailed specifications, refer to the individual datasheets of the specific manufacturer.

240776

© Banner Engineering Corp.

ПРОМЭЛЕКТРОНИКА/ sales@prom-elec.com