DXM1200-B1 and DXM1200E-B1 Wireless Controller

Features

The DXM1200x-B1 Wireless Controller is an industrial wireless controller that facilitates Industrial Internet of Things (IIoT) applications. As a communications gateway, it interfaces local serial ports, local I/O ports, and local ISM radio devices to the Internet using a cellular connection or wired Ethernet network connection.



- **High-Performance Wireless Communication**—Uses Sure Cross® DX80 Wireless Gateway or MultiHop radio with 900 MHz or 2.4 GHz ISM bands available for long-range communication
- **Flexible and Customizable**—Expanded internal logic controller with action rules and ScriptBasic programming capable of developing simple or complex solutions to process, log, and control data to/from multiple wireless radios and sensors
- **Easy Installation in all Environments**—IP67 housing makes installation in any location simpler by eliminating the need for a control cabinet
- **Improved Speed and Memory**—Upgraded internal processor to use 2850 32-bit integer registers, 2000 floating-point registers, and 1050 non-volatile 32-bit integer registers; expanded ScriptBasic programming capability for faster script processing and ability to build more complex solutions with scripts
- **External Communications**—Optional cellular modem with internal antenna for internet connectivity
- **Industry Compatibility**—Automation protocols include Modbus/TCP, Modbus RTU, and EtherNet/IP™ for communications between PLCs, HMIs, or other local hosts
- **Cloud Connectivity**—Visualize data and set alarms by sending data from the DXM1200 to the cloud either through BannerCDS.com or third-party cloud sites
- **Customizable Alerts**—Secure email for alerts when using Banner Cloud Data Services
  - Data logged to a removable SD card
  - Interactive programmable user interface with LCD and LED indicators
  - Industry-standard RS-485, Ethernet, and USB communication ports

Models

Model	Power In	Connectors	Radio
DXM1200-B1R2	12-30 V DC	Low profile housing One 4-pin M8 Ethernet connector One 5-pin M12 power and RS-485 connector	900 MHz HE5 MultiHop Data Radio
DXM1200-B1R4			2.4 GHz HE5 MultiHop Data Radio

Cellular Communications—Controllers accept Banner LTE-M (CATM1) modems only. Cellular modems are ordered separately as accessories under the following part numbers:

- LTE CAT-M1 AT&T (North America only):**SXI-CATM1ATT-001**
- LTE CAT-M1 Verizon (United States only): **SXI-CATM1VZW-001**
- LTE CAT-M1/NB-IoT Multi-Carrier (Europe only): **SXI-CATM1WW-001**

For more information, refer to the technical note Activating a Cellular Modem (p/n 205026).

The following models are no longer available for order but are still covered by the information in this document.

Model	Connectors	Radio
DXM1200-B1	Low profile housing One 4-pin M8 Ethernet connector One 5-pin M12 power and RS-485 connector	None
DXM1200-B1R1		900 MHz PE5 Performance
DXM1200-B1R3		2.4 GHz PE5 Performance
DXM1200E-B1R1	E=Extended housing One 4-pin M12 D Code Ethernet connector One 5-pin M12 power and RS-485 connector Two 5-pin M12 RS-485 connectors	900 MHz PE5 Performance
DXM1200E-B1R2		900 MHz HE5 MultiHop Data Radio
DXM1200E-B1R3		2.4 GHz PE5 Performance
DXM1200E-B1R4		2.4 GHz HE5 MultiHop Data Radio

DXM1200 Documentation

- DXM Wireless Controller Sell Sheet, p/n 194063
- DXM1200-B1 Wireless Controller Datasheet, p/n 196719
- DXM1200-B2 Wireless Controller Datasheet, p/n 238977
- DXM1200-Bx Wireless Controller Instruction Manual, p/n 216539

Original Instructions
26-Aug-26

© Banner Engineering Corp. All rights reserved.
www.bannerengineering.com

196719
p/n: 196719 Rev. H

ПРОМЭЛЕКТРОНИКА/ sales@prom-elec.com

- DXM1200-X2 Wireless Controller Datasheet, p/n 238978
- DXM1200-X2 Controller Product Manual, p/n 239172
- DXM ScriptBasic Instruction Manual, p/n 191745
- DXM Controller Configuration Quick Start, p/n 191247
- DXM Configuration Software v4 (p/n b_4496867)
- DXM Configuration Software Instruction Manual, p/n 209933
- DXM EDS Configuration file for Allen-Bradley PLCs
- Activating a Cellular Modem (p/n b_4419353)
- Additional technical notes and videos

For more information about the DXM1200 family of products, including technical notes, configuration examples, and ScriptBasic program examples, please refer to the Banner website: www.bannerengineering.com

System Overview

Banner's DXM Logic Controller integrates Banner's wireless radio and cellular connectivity to provide a platform for the Industrial Internet of Things (IIoT).

DXM1200-B1 Controller

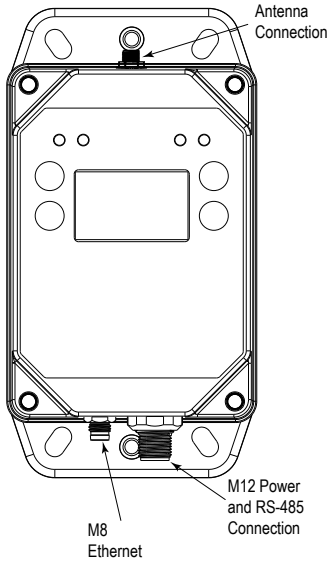

DXM1200E-B1 Controller

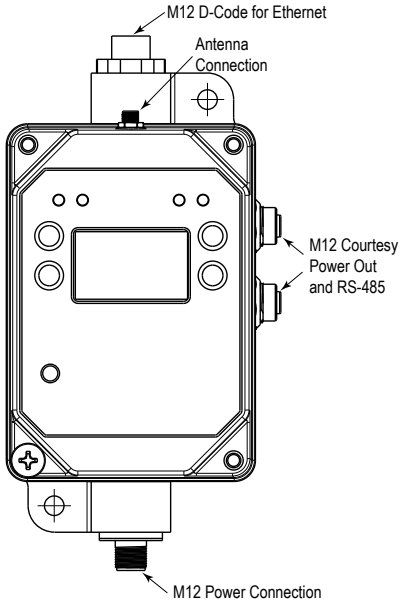

Inputs and Outputs	Connectivity	Logic Controller	User Interface
N/A	Cellular	Action rules	LCD screen
	Sure Cross® radios	Programming language	LED indicators
	Ethernet	Scheduler	
	Internal micro USB	Push to the cloud	
	RS-485 Client	Data logging	

Modbus registers for internal local registers (Modbus ID 199)

Local Registers	Type	Description
1–845	32-bit integer	Local data registers
846–849	32-bit integer	Reset, Constant, Timer
851–900	32-bit non-volatile integer	Data flash, non-volatile
901–1000		Reserved for internal use
1001–5000	floating point	Floating point registers, local data registers
5001–7000	32-bit integer	Local data registers
7001–8000	32-bit non-volatile integer	Data flash, non-volatile

Continued on page 3

© Banner Engineering Corp. All rights reserved.
www.bannerengineering.com

Continued from page 2

Local Registers	Type	Description
> 10000		Read-only virtual registers, system-level data

Connectivity—The DXM1200's wired and wireless connectivity options make it easy to share data between local and remote equipment. The cellular modem option eliminates the need for IT infrastructures to connect remote equipment for sensing and control to IIoT cloud services. The integrated Sure Cross® wireless radio enables Modbus connectivity to remote sensors, indicators, and control equipment. Connect directly to any PLC and/or SCADA system for easy integration into existing control or monitoring systems. Banner Industrial Wireless radios have two types of networks that can be used for creating applications and solving problems.

Wired Connectivity

Ethernet: Modbus/TCP (client/server) or Ethernet/IP

Field Bus: Modbus RS-485 Client

Wireless Connectivity

Sure Cross Wireless Radio: DX80 900 MHz, DX80 2.4 GHz, MultiHop 900 MHz, or MultiHop 2.4 GHz

Cellular modem: LTE-M (United States) or LTE-M/NB-IoT (outside the United States)

Wireless Radio Networks

Performance Wireless Radio Network

Star topology (point-to-point between Gateway and Node radios)

Battery-powered Node applications are more efficient in a star topology

Six inputs and six outputs maximum per radio

MultiHop Wireless Radio Network

Tree topology between one client radio and many repeater and/or server radios

Repeater radios add effectively unlimited radio network range

Full Modbus sensor register data collection as well as typical local I/O like discrete, analog, etc.

Logic Controller—Program the DXM1200's logic controller using action rules and/or ScriptBasic language, which can execute concurrently. The control functions allow freedom when creating custom sensing and control sequences. The logic controller supports the Modbus protocol standards for data management, ensuring seamless integration with existing automation systems. File and LCD password protection is an option.

Register Mapping

Cyclical Read rules from wireless devices or local wired Modbus devices that include optional scaling, error conditions, and the ability to activate a read rule

Cyclical or change of state write rules to wireless devices or local wired Modbus devices with scaling

Modbus TCP Client read or write rules for external devices on the network

Action Rules

Thresholds (IF/THEN/ELSE) with timers, minimum on/off time, and logging options

Math/Logic Rules (arithmetic and bitwise operators)

Control Logic (logical operators and SR/T/D/JK flip flops)

Trending (multiple averaging filters)

Tracking (counts, on/off times)

Push data on conditions

Scheduler

Time/calendar-based events

Holiday skips

One-time events

Dynamic scheduler updating

Astronomical clock

Optional Text Programming Language

ScriptBasic to create variables, arrays, functions, loops, IF/THEN/ELSE, logical and arithmetic operators, API commands, register access, string functions and operators, time commands

Data Logging

Cyclic data/event logging

User Interface— A simple user interface consists of an LCD screen and four LED indicators.

User programmable LCD

Bind Sure Cross radios

Conduct a site survey to evaluate the radio signal integrity of radios within the network

View register and output information

View system status and configuration

API Interface

Host-initiated control

Web service integration

User-Defined LED indicators

Indicates the status of the DXM1200, processes, or equipment

Applications Overview

The DXM is ideal for smart factory and facilities applications, including:

- Productivity solutions, such as
  - Call for parts, service, or maintenance
  - Pick-to-light
  - OEE Tower light monitoring
- Predictive maintenance and continuous monitoring using
  - Vibration and temperature monitoring
  - Tank level monitoring
  - Non-contact condition monitoring
- Environmental monitoring and control, such as temperature and humidity monitoring

The DXM can provide visual indication using indicator lights, collect data, and interface with automation systems.

© Banner Engineering Corp. All rights reserved.
www.bannerengineering.com

Banner Cloud Data Services (CDS)

With a few easy steps, the DXM can be connected to and share data with Banner's Cloud Data Services. This is a web-based software platform that allows users to access, store, protect, visualize, and export critical data collected by Banner's DXMs.

This software complements our wireless product portfolio and provides customers with complete end-to-end IIoT solutions to solve the most pressing problems of the Industrial market. Visit the Banner CDS site for account access and technical support at www.bannercds.com.

Get Solutions Up and Running Quickly: Solution templates are available to help implement IIoT solutions with ease-no coding or expertise required. In addition, all elements of a wireless solution from Banner-from sensor to cloud-are purpose-built to work together for easy configuration and use.

Make Better Data-Driven Decisions: The CDS platform is more than a dashboard. The software can provide actionable insights that allow you to solve real challenges on the factory floor by using analytics and visualization tools that range from graphs, gauges, status indicators, and number displays to alarm icons, maps, and tables. Easily organize and manage the health of various assets and processes via customizable layouts that can be constructed for workstation screens or kiosk displays. In addition, the ability to store or export data, and analyze trends over time helps you and the organization make better, data-driven decisions long-term.

Access the Data You Want and Get the Alerts You Need: Remotely access data anytime and anywhere. On-demand visibility and real-time alerts allow you to remotely monitor and diagnose systems quickly, saving time and cost. Simple data structure allows users to organize assets and facilities in a manner that best serves the needs of the business.

Maximize Uptime and Increase Efficiency: Predictive maintenance is a key capability of Banner's IIoT solutions. The software platform helps you use device data to predict machine maintenance requirements, which reduces unplanned downtime, increases mean time between failure (MTBF), and reduces maintenance costs.

Wiring Power and RS-485 for the DXM1200-B1 and DXM1200E-B1 Models

Use the following wiring diagrams to wire power and communication to the DXM1200 and DXM1200E devices. Connecting power to the communication pins will cause permanent damage.

M12 male power and RS-485 connection for the DXM1200 and DXM1200E

5-pin M12 Male Connector	Pin	Wire Color	Description
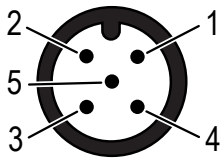	1	Brown (bn)	10 to 30 V DC
	2	White (wh)	RS485 / D1 / B / +
	3	Blue (bu)	DC common (GND)
	4	Black (bk)	RS485 / D0 / A / –
	5	Gray (gy)	Comms Ground

M8 male industrial Ethernet connection for the DXM1200

4-pin M8 Industrial Ethernet Connector (male)	Pin	Wire Color	Description
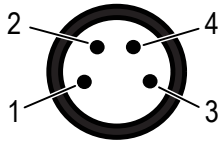	1	White/orange	+ Tx
	2	White/blue	+Rx
	3	Orange	–Tx
	4	Blue	–Rx

Female D-Code Ethernet connection for the DXM1200E

4-pin Industrial Ethernet Connector (female)	Pin	Wire Color	Description
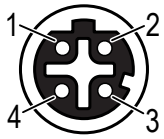	1	Black	+ Tx
	2	Red	+Rx
	3	Green	–Tx
	4	White	–Rx

© Banner Engineering Corp. All rights reserved.
www.bannerengineering.com

M12 female RS-485 connection for the DXM1200E

5-pin M12 Connector (female)	Pin	Wire Color	Description
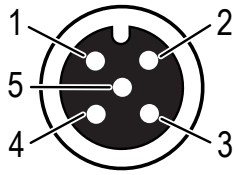	1	Brown (bn)	10 to 30 V DC from the input power connector
	2	White (wh)	RS485 / D1 / B / +
	3	Blue (bu)	DC common (GND) from the input power connector
	4	Black (bk)	RS485 / D0 / A / –
	5	N/A	No connection

Specifications

Radio Specifications for Performance and MultiHop (500 mW)

Radio Transmit Power (900 MHz, 500 mW radios)

Conducted: 27 dBm (500 mW)

EIRP with the supplied antenna: < 36 dBm

Radio Transmit Power (2.4 GHz radios)

Conducted: < 18 dBm (65 mW)

EIRP with the supplied antenna: < 20 dBm (100 mW)

Radio Range

A 2 dB antenna ships with this device.

Transmit power and range are subject to many factors, including antenna gain, installation methods, characteristics of the application, and environmental conditions.

Please refer to the following documents for installation instructions and high-gain antenna options.

Installing Your Sure Cross® Radios (151514)
Conducting a Site Survey (133602)
Sure Cross® Antenna Basics (132113)

Antenna Minimum Separation Distance

900 MHz radios transmitting at ≥ 500 mW: 4.57 m (15 ft) with the supplied antenna

2.4 GHz radios transmitting at 65 mW: 0.3 m (1 ft) with the supplied antenna

Antenna Connection

Ext. Reverse Polarity SMA, 50 Ohms

Max Tightening Torque: 0.45 N·m (4 lbf·in)

Spread Spectrum Technology

FHSS (Frequency Hopping Spread Spectrum)

Link Timeout (Performance)

Gateway: Configurable via User Configuration Software

Node: Defined by Gateway

Radio Packet Size (MultiHop)

900 MHz: 175 bytes (85 Modbus registers)

2.4 GHz: 75 bytes (37 Modbus registers)

900 MHz Compliance (SX7023EXT Radio Module)

Radio module is indicated by the product label marking

Contains FCC ID: UE3SX7023EXT

Contains IC: 7044A-SX7023EXT

2.4 GHz Compliance (SX243 Radio Module)

Radio module is indicated by the product label marking

Contains FCC ID: UE3SX243

Radio Equipment Directive (RED) 2014/53/EU

Contains IC: 7044A-SX243

FCC Part 15 Class A for Intentional Radiators

This equipment has been tested and found to comply with the limits for a Class A digital device, pursuant to Part 15 of the FCC Rules. These limits are designed to provide reasonable protection against harmful interference when the equipment is operated in a commercial environment. This equipment generates, uses, and can radiate radio frequency energy and, if not installed and used in accordance with the instruction manual, may cause harmful interference to radio communications. Operation of this equipment in a residential area is likely to cause harmful interference in which case the user will be required to correct the interference at his own expense.

(Part 15.21) Any changes or modifications not expressly approved by the party responsible for compliance could void the user's authority to operate this equipment.

Industry Canada Statement for Intentional Radiators

This device contains licence-exempt transmitters(s)/receiver(s) that comply with Innovation, Science and Economic Development Canada's licence-exempt RSS(s). Operation is subject to the following two conditions:

1. This device may not cause interference.
2. This device must accept any interference, including interference that may cause undesired operation of the device.

Cet appareil contient des émetteurs/récepteurs exemptés de licence conformes à la norme Innovation, Sciences, et Développement économique Canada. L'exploitation est autorisée aux deux conditions suivantes:

1. L'appareil ne doit pas produire de brouillage.
2. L'utilisateur de l'appareil doit accepter tout brouillage radioélectrique subi, même si le brouillage est susceptible d'en compromettre le fonctionnement.

RS-485 Communication Specifications

Communication Hardware (MultiHop RS-485)

Interface: 2-wire half-duplex RS-485

Baud rates: 9.6k, 19.2k (default), or 38.4k via DIP switches; 1200 and 2400 via the MultiHop Configuration Software

Data format: 8 data bits, no parity, 1 stop bit

DXM1200-B1 and DXM1200E-B1 Specifications

Supply Voltage

12 to 30 V DC (use only with a suitable Class 2 power supply (UL) or a Limited Power Source (LPS) (CE) power supply)

© Banner Engineering Corp. All rights reserved.
www.bannerengineering.com

Power Consumption
60 mA average at 24 V

Communication Protocols
Modbus RTU Client, Modbus TCP, and EtherNet/IP

Connection
Integral 5-pin M12 male quick-disconnect connector

Required Overcurrent Protection

WARNING: Electrical connections must be made by qualified personnel in accordance with local and national electrical codes and regulations.

Overcurrent protection is required to be provided by end product application per the supplied table.

Overcurrent protection may be provided with external fusing or via Current Limiting, Class 2 Power Supply.

Supply wiring leads < 24 AWG shall not be spliced.

For additional product support, go to www.bannerengineering.com.

Supply Wiring (AWG)	Required Overcurrent Protection (A)	Supply Wiring (AWG)	Required Overcurrent Protection (A)
20	5.0	26	1.0
22	3.0	28	0.8

Continued on page 7

Construction
Polycarbonate

Security Protocols
TLS, SSL, HTTPS

Logging
8 GB maximum; removable Micro SD card format

Continued from page 5

Supply Wiring (AWG)	Required Overcurrent Protection (A)	Supply Wiring (AWG)	Required Overcurrent Protection (A)
24	2.0	30	0.5

Certifications
CE/UKCA approval only applies to 2.4 GHz models

Banner Engineering BV
Park Lane, Culliganlaan 2F bus 3
1831 Diegem, BELGIUM

Turck Banner LTD Blenheim House
Blenheim Court
Wickford, Essex SS11 8YT
GREAT BRITAIN

ANATEL
Agência Nacional de Telecomunicações
03737-22-04042

ANATEL

Este equipamento não tem direito à proteção contra interferência prejudicial e não pode causar interferência em sistemas devidamente autorizados. Para maiores informações, consulte o site da ANATEL www.gov.br/anatel/pt-br/

ANATEL
Agência Nacional de Telecomunicações

Environmental Specifications (DXM1200)

Operating Conditions[1]
–20 °C to +60 °C (–4 °F to +140 °F)
95% maximum relative humidity (non-condensing)
Radiated Immunity: 3 V/m (EN 61000-4-3)

Environmental Rating
IP67

[1] Operating the devices at the maximum operating conditions for extended periods can shorten the life of the device.

Shock and Vibration
All models meet IEC 60068-2-6 and IEC 60068-2-27 testing criteria

Shock: 30G 11 ms duration, half sine wave per IEC 60068-2-27

Vibration: 10 Hz to 55 Hz, 0.5 mm peak-to-peak amplitude per IEC 60068-2-6

© Banner Engineering Corp. All rights reserved.
www.bannerengineering.com

DXM1200E-B1 Dimensions

All measurements are listed in millimeters, unless noted otherwise. The measurements provided are subject to change.

DXM1200E-B1 dimensions

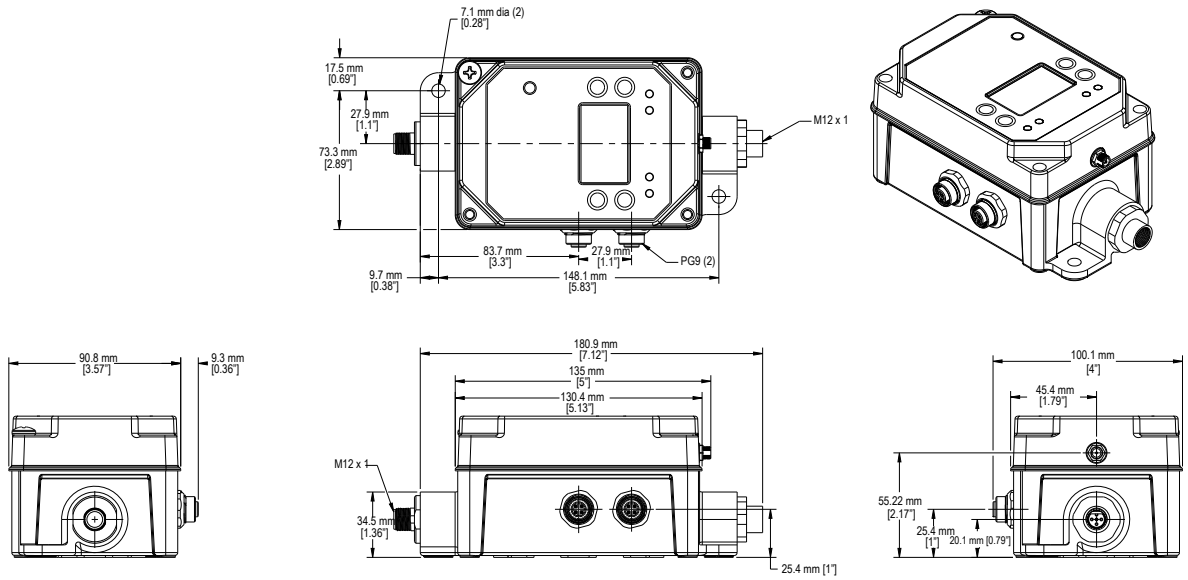

The following models are no longer available for order but are still covered by the information in this document.

DXM1200-B1 dimensions

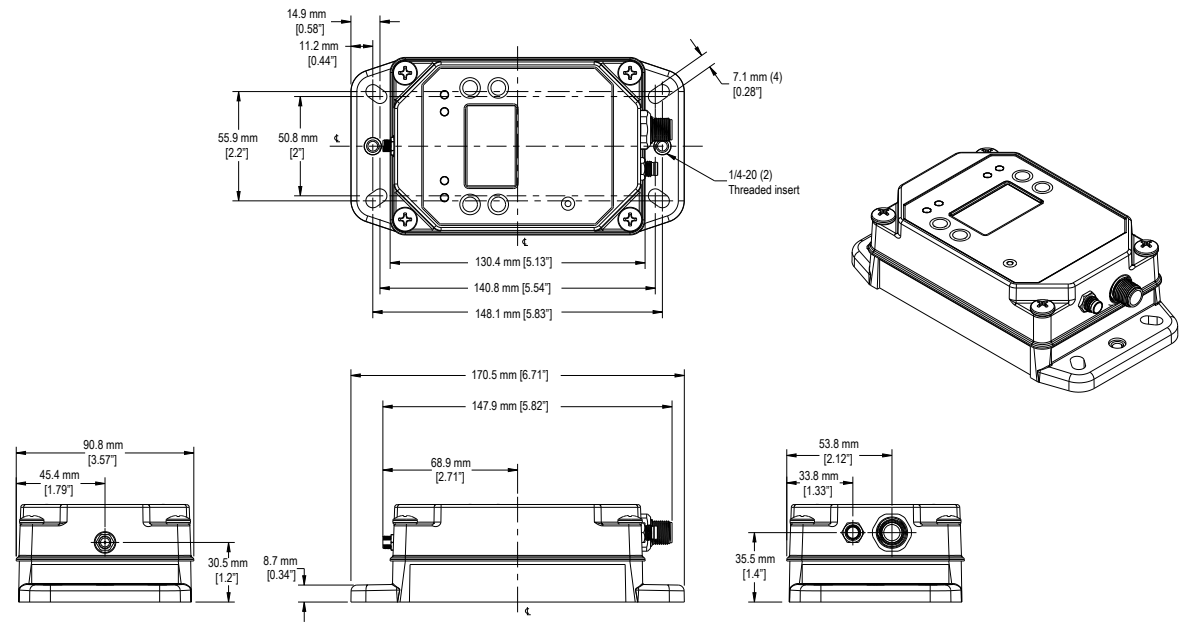

DXM1200-B1 Accessories

For a complete list of all the accessories for the Sure Cross wireless product line, please download the Banner Industrial Wireless Accessories list (p/n b_3147091).

© Banner Engineering Corp. All rights reserved.
www.bannerengineering.com

Cordsets MQDC1-506—5-pin M12, straight, single-ended, 6 ft MQDC1-530—5-pin M12, straight, single-ended, 30 ft MQDC1-506RA—5-pin M12, right-angle, single-ended, 6 ft MQDC1-530RA—5-pin M12, right-angle, single-ended, 30 ft IVUC-E-406—RJ45 Ethernet to 4-pin threaded M8, straight, 6 ft IVUC-E-415—RJ45 Ethernet to 4-pin threaded M8, straight, 15 ft STP-M12D-406—RJ45 to 4-pin Male D-Code M12, Straight, 6 ft STP-M12D-415—RJ45 to 4-pin Male D-Code M12, Straight, 15 ft STP-M12D-430—RJ45 to 4-pin Male D-Code M12, Straight, 30 ft	**Power Supplies** PSD-24-4—DC Power Supply, Desktop style, 3.9 A, 24 V DC, Class 2, 4-pin M12 quick disconnect (QD) PSDINP-24-06—DC power supply, 0.63 Amps, 24 V DC, with DIN Rail Mount, Class I Division 2 (Groups A, B, C, D) Rated PSDINP-24-13 —DC power supply, 1.3 Amps, 24 V DC, with DIN Rail Mount, Class I Division 2 (Groups A, B, C, D) Rated PSDINP-24-25 — DC power supply, 2.5 Amps, 24 V DC, with DIN Rail Mount, Class I Division 2 (Groups A, B, C, D) Rated PSW-24-1—DC power supply with multi-blade wall plug, 100–240 V AC 50/60 Hz input, 24 V DC 1 A output, UL Listed Class 2, 4-pin female M12 connector
Cellular Communications—Controllers accept Banner LTE-M (CATM1) modems only. Cellular modems are ordered separately as accessories under the following part numbers: • LTE CAT-M1 AT&T (North America only):**SXI-CATM1ATT-001** • LTE CAT-M1 Verizon (United States only): **SXI-CATM1VZW-001** • LTE CAT-M1/NB-IoT Multi-Carrier (Europe only): **SXI-CATM1WW-001**	

Product Support and Maintenance

Cleaning Instructions for the Product Label

Clean the product label with dry or water-dampened cloth only.

Warnings

WARNING:
- **Do not use this device for personnel protection**
- Using this device for personnel protection could result in serious injury or death.
- This device does not include the self-checking redundant circuitry necessary to allow its use in personnel safety applications. A device failure or malfunction can cause either an energized (on) or de-energized (off) output condition.

IMPORTANT: Please download the complete DXM1200x-B1 Wireless Controller technical documentation, available in multiple languages, from www.bannerengineering.com for details on the proper use, applications, Warnings, and installation instructions of this device.

IMPORTANT: Por favor descargue desde www.bannerengineering.com toda la documentación técnica de los DXM1200x-B1 Wireless Controller, disponibles en múltiples idiomas, para detalles del uso adecuado, aplicaciones, advertencias, y las instrucciones de instalación de estos dispositivos.

IMPORTANT: Veuillez télécharger la documentation technique complète des DXM1200x-B1 Wireless Controller sur notre site www.bannerengineering.com pour les détails sur leur utilisation correcte, les applications, les notes de sécurité et les instructions de montage.

Install and properly ground a qualified surge suppressor when installing a remote antenna system. Remote antenna configurations installed without surge suppressors invalidate the manufacturer's warranty. Keep the ground wire as short as possible and make all ground connections to a single-point ground system to ensure no ground loops are created. No surge suppressor can absorb all lightning strikes; do not touch the Sure Cross® device or any equipment connected to the Sure Cross® device during a thunderstorm.

Exporting Sure Cross® Radios. It is our intent to fully comply with all national and regional regulations regarding radio frequency emissions. **Customers who want to re-export this product to a country other than that to which it was sold must ensure the device is approved in the destination country.** The Sure Cross wireless products were certified for use in these countries using the antenna that ships with the product. When using other antennas, verify you are not exceeding the transmit power levels allowed by local governing agencies. This device has been designed to operate with the antennas listed on Banner Engineering's website and having a maximum gain of 9 dBm. Antennas not included in this list or having a gain greater than 9 dBm are strictly prohibited for use with this device. The required antenna impedance is 50 ohms. To reduce potential radio interference to other users, the antenna type and its gain should be so chosen such that the equivalent isotropically radiated power (EIRP) is not more than that permitted for successful communication. Consult with Banner Engineering Corp. if the destination country is not on this list.

IMPORTANT:
- **Never operate a radio without connecting an antenna**
- Operating radios without an antenna connected will damage the radio circuitry.
- To avoid damaging the radio circuitry, never apply power to a Sure Cross® Performance or Sure Cross® MultiHop radio without an antenna connected.

IMPORTANT:
- **Electrostatic discharge (ESD) sensitive device**
- ESD can damage the device. Damage from inappropriate handling is not covered by warranty.
- Use proper handling procedures to prevent ESD damage. Proper handling procedures include leaving devices in their anti-static packaging until ready for use; wearing anti-static wrist straps; and assembling units on a grounded, static-dissipative surface.

Notas Adicionales (con Antena)

Información México: La operación de este equipo está sujeta a las siguientes dos condiciones: 1) es posible que este equipo o dispositivo no cause interferencia perjudicial y 2) este equipo debe aceptar cualquier interferencia, incluyendo la que pueda causar su operación no deseada.

Banner es una marca registrada de Banner Engineering Corp. y podrán ser utilizadas de manera indistinta para referirse al fabricante. "Este equipo ha sido diseñado para operar con las antenas tipo Omnidireccional para una ganancia máxima de antena de 6 dBd y Yagi para una ganancia máxima de antena 10 dBd que en seguida se enlistan. También se incluyen

© Banner Engineering Corp. All rights reserved.
www.bannerengineering.com

aquellas con aprobación ATEX tipo Omnidireccional siempre que no excedan una ganancia máxima de antena de 6dBd. El uso con este equipo de antenas no incluidas en esta lista o que tengan una ganancia mayor que 6 dBd en tipo omnidireccional y 10 dBd en tipo Yagi, quedan prohibidas. La impedancia requerida de la antena es de 50 ohms."

Approved Antennas

BWA-9O2-C--Antena, Omni 902-928 MHz, 2 dBd, junta de caucho, RP-SMA Macho
BWA-9O5-C--Antena, Omni 902-928 MHz, 5 dBd, junta de caucho, RP-SMA Macho
BWA-9O6-A--Antena, Omni 902-928 MHz, 6 dBd, fibra de vidrio, 1800mm, N Hembra
BWA-9Y10-A--Antena, Yagi, 900 MHz, 10 dBd, N Hembra

Mexican Importer

Banner Engineering de Mèxico, S. de R.L. de C.V. | David Alfaro Siqueiros 103 Piso 2 Valle oriente | San Pedro Garza Garcia Nuevo Leòn, C. P. 66269

81 8363.2714

Banner Engineering Corp Limited Warranty

Banner Engineering Corp. warrants its products to be free from defects in material and workmanship for one year following the date of shipment. Banner Engineering Corp. will repair or replace, free of charge, any product of its manufacture which, at the time it is returned to the factory, is found to have been defective during the warranty period. This warranty does not cover damage or liability for misuse, abuse, or the improper application or installation of the Banner product.

THIS LIMITED WARRANTY IS EXCLUSIVE AND IN LIEU OF ALL OTHER WARRANTIES WHETHER EXPRESS OR IMPLIED (INCLUDING, WITHOUT LIMITATION, ANY WARRANTY OF MERCHANTABILITY OR FITNESS FOR A PARTICULAR PURPOSE), AND WHETHER ARISING UNDER COURSE OF PERFORMANCE, COURSE OF DEALING OR TRADE USAGE.

This Warranty is exclusive and limited to repair or, at the discretion of Banner Engineering Corp., replacement. **IN NO EVENT SHALL BANNER ENGINEERING CORP. BE LIABLE TO BUYER OR ANY OTHER PERSON OR ENTITY FOR ANY EXTRA COSTS, EXPENSES, LOSSES, LOSS OF PROFITS, OR ANY INCIDENTAL, CONSEQUENTIAL OR SPECIAL DAMAGES RESULTING FROM ANY PRODUCT DEFECT OR FROM THE USE OR INABILITY TO USE THE PRODUCT, WHETHER ARISING IN CONTRACT OR WARRANTY, STATUTE, TORT, STRICT LIABILITY, NEGLIGENCE, OR OTHERWISE.**

Banner Engineering Corp. reserves the right to change, modify or improve the design of the product without assuming any obligations or liabilities relating to any product previously manufactured by Banner Engineering Corp. Any misuse, abuse, or improper application or installation of this product or use of the product for personal protection applications when the product is identified as not intended for such purposes will void the product warranty. Any modifications to this product without prior express approval by Banner Engineering Corp will void the product warranties. All specifications published in this document are subject to change; Banner reserves the right to modify product specifications or update documentation at any time. Specifications and product information in English supersede that which is provided in any other language. For the most recent version of any documentation, refer to: www.bannerengineering.com.

For patent information, see www.bannerengineering.com/patents.

© Banner Engineering Corp. All rights reserved.