Installing the Side Mount Brackets

The following installation guide describes how to mount the EZLSA-MBK-16 side-mount brackets. Refer to the EZ-SCREEN LS installation manual (p/n 179480) for complete mounting, alignment, and installation instructions, including dimensional information.

1. Adjust clamp screw to loosen or tighten clamp.

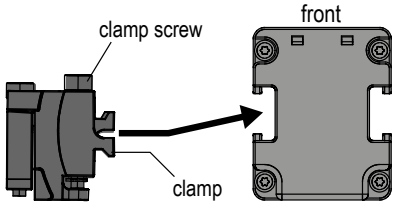

2. Slide inner bracket assembly into outer bracket groove.

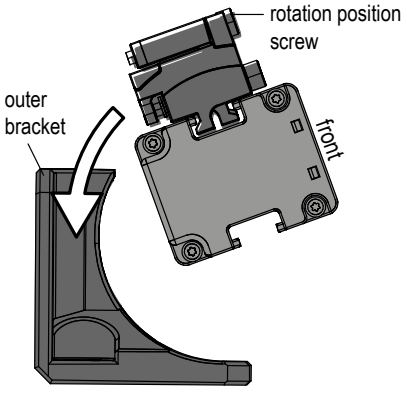

(Depending on your configuration, it may be helpful to mount the outer bracket to the mount surface first before Step 2 process)

3. With the light screen aligned, tighten rotation position screw to complete installation.

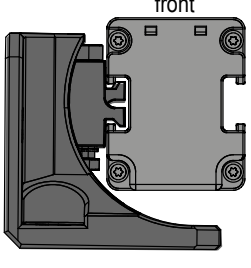

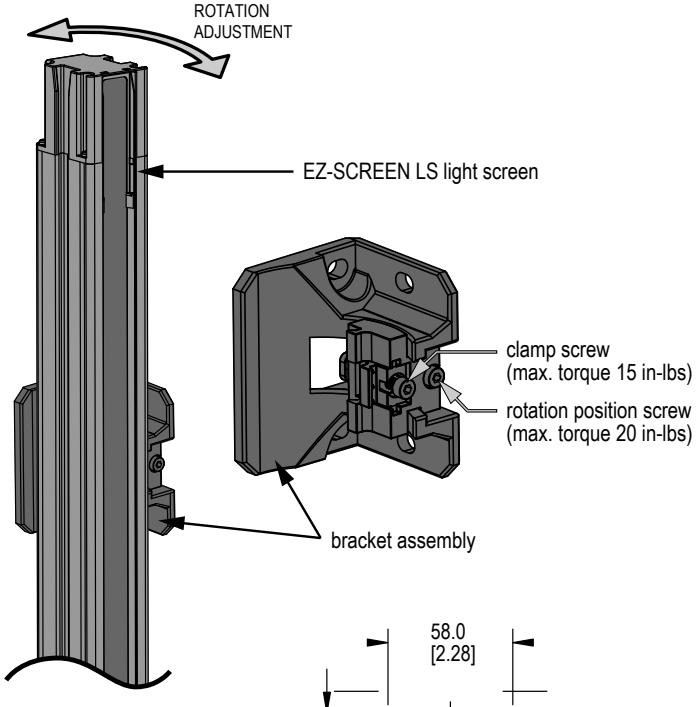

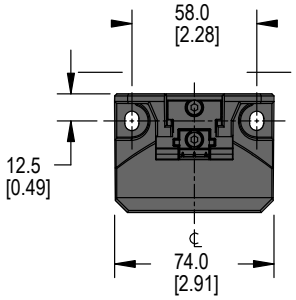

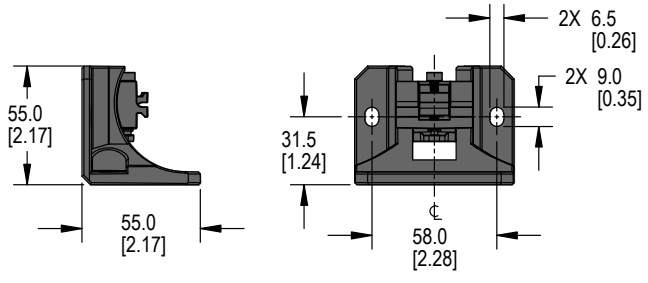

Original Instructions
05-Nov-25

© Banner Engineering Corp. All rights reserved.
www.bannerengineering.com

189856
p/n: 189856 Rev. A

ПРОМЭЛЕКТРОНИКА/ sales@prom-elec.com