ISD Connect: Device Connection Options



This is a guide to assist in the selection of a door guard locking solution using different combinations of interlocks for different levels of safety and process control. The applications shown are not the only methods for any particular application but are common examples.

ПРОМЭЛЕКТРОНИКА/ sales@prom-elec.com

Safety Category 4

Mechanical Locking Switch with ISD Connect, SI-RFID with ISD, and SC10

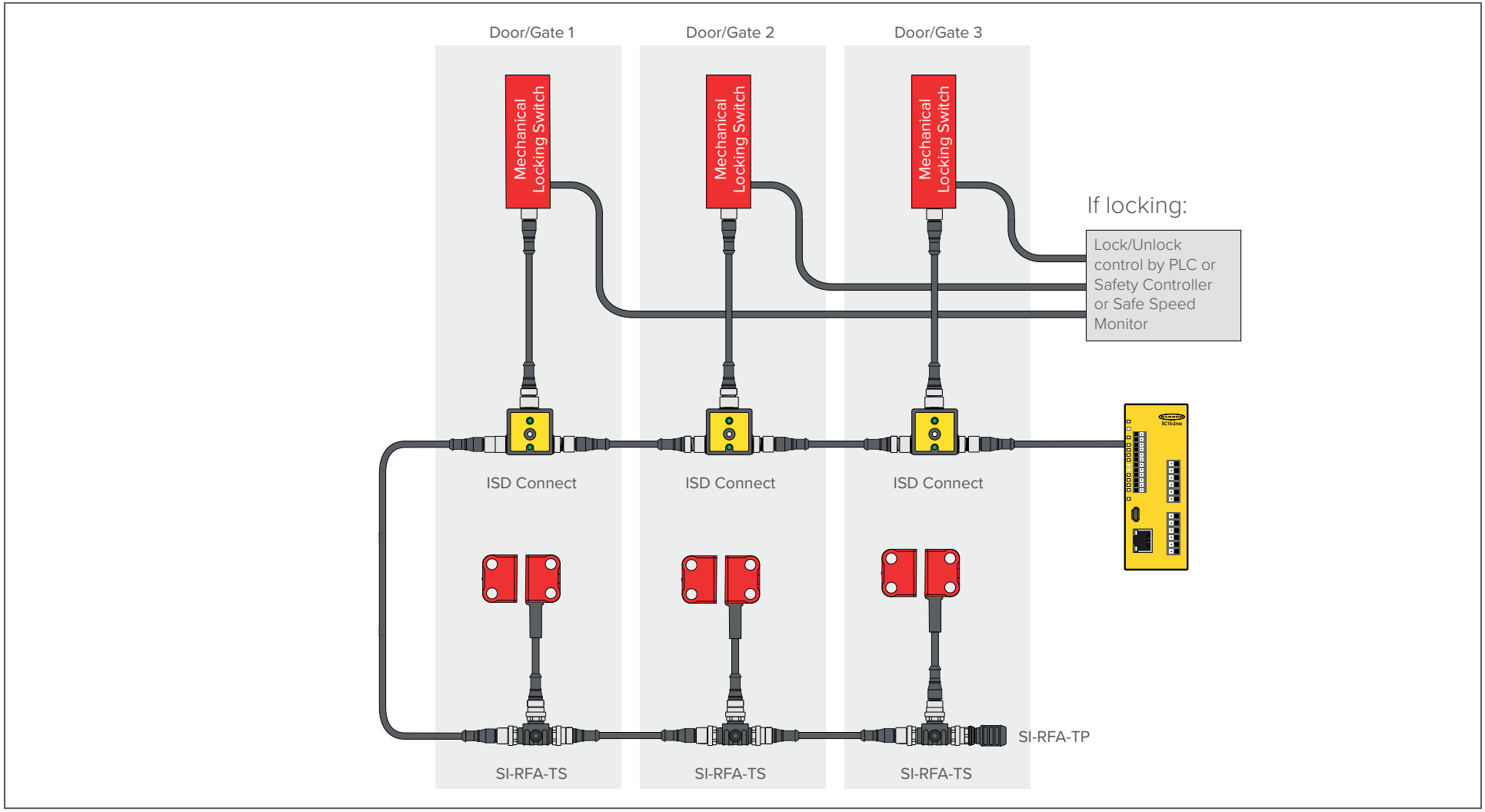

In this example, a mechanical locking switch is used in conjunction with a SI-RFID door switch to keep a door/gate closed and locked in a severe safety risk application as determined by a Risk Assessment.

The safety is primarily achieved with the SI-RFID door switch and the mechanical locking switch provides locking to prevent access to the hazard.

The mechanical locking switch and the SI-RFID are all in series, connecting to one pair of safety inputs on the controller. With this arrangement you will achieve Safety Cat/4.

Based on the model of mechanical locking switch used, the ISD Connect and SI-RFID you will be able to determine if the door/gate is closed, locked or both.

Safety Category 4

Mechanical Locking Switch with ISD Connect, Interlock, and SC10

Mechanical Switch Options (ISD Connect Compatible)



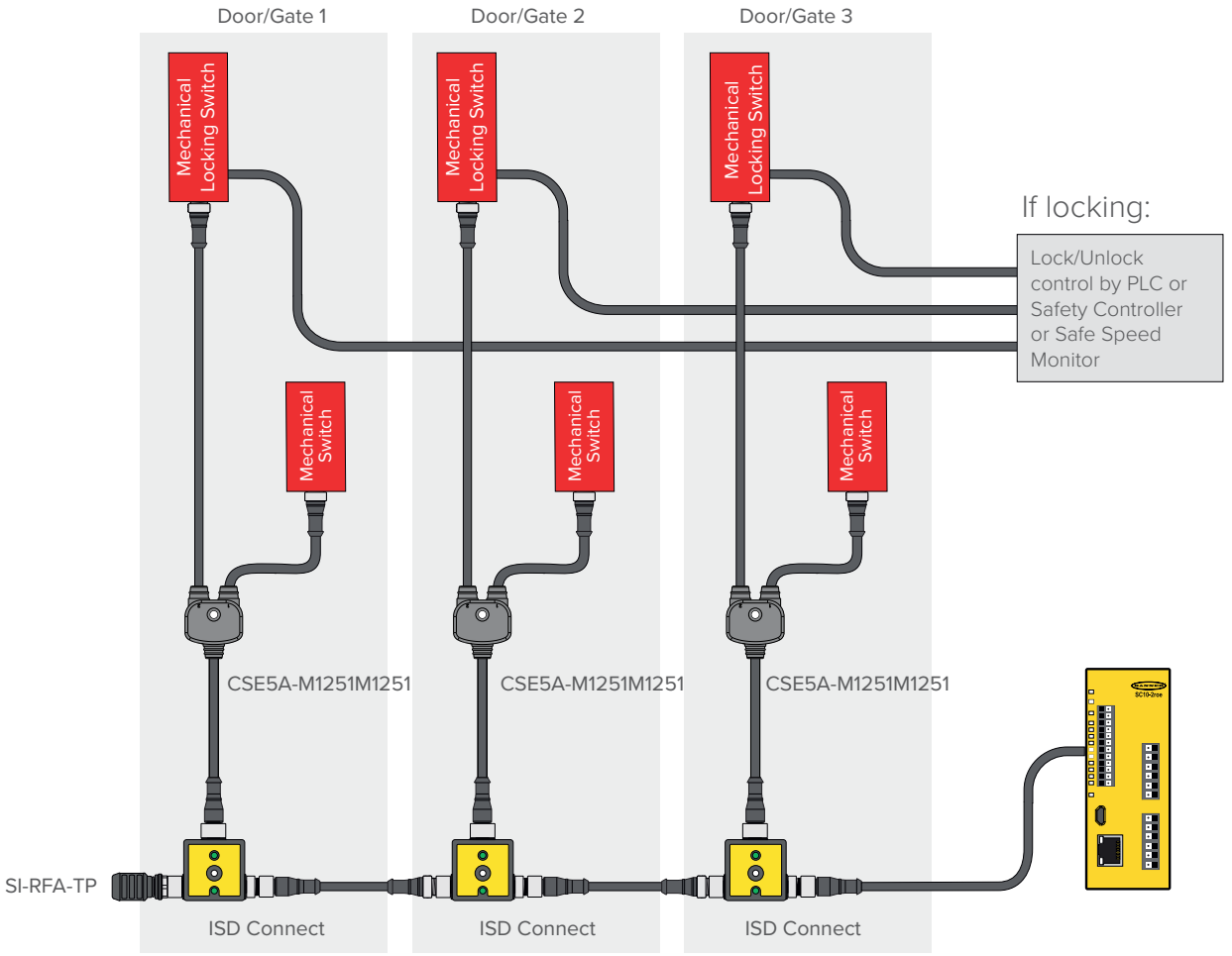

This example shows a mechanical locking switch used in conjunction with another safety mechanical switch to monitor and/or keep a door/gate closed and locked in a severe safety risk application as determined by a Risk Assessment.

One N/C contact from each switch provides the redundancy needed to achieve Safety Category 4.

Based on the model of the mechanical locking switch used, the ISD Connect will be able to determine if the door/gate is closed.

In the event of a switch failure the ISD Connect will be able to indicate which door/gate and switch is causing the issue.

Safety Category 2

Mechanical Locking Switch with ISD Connect and SC10

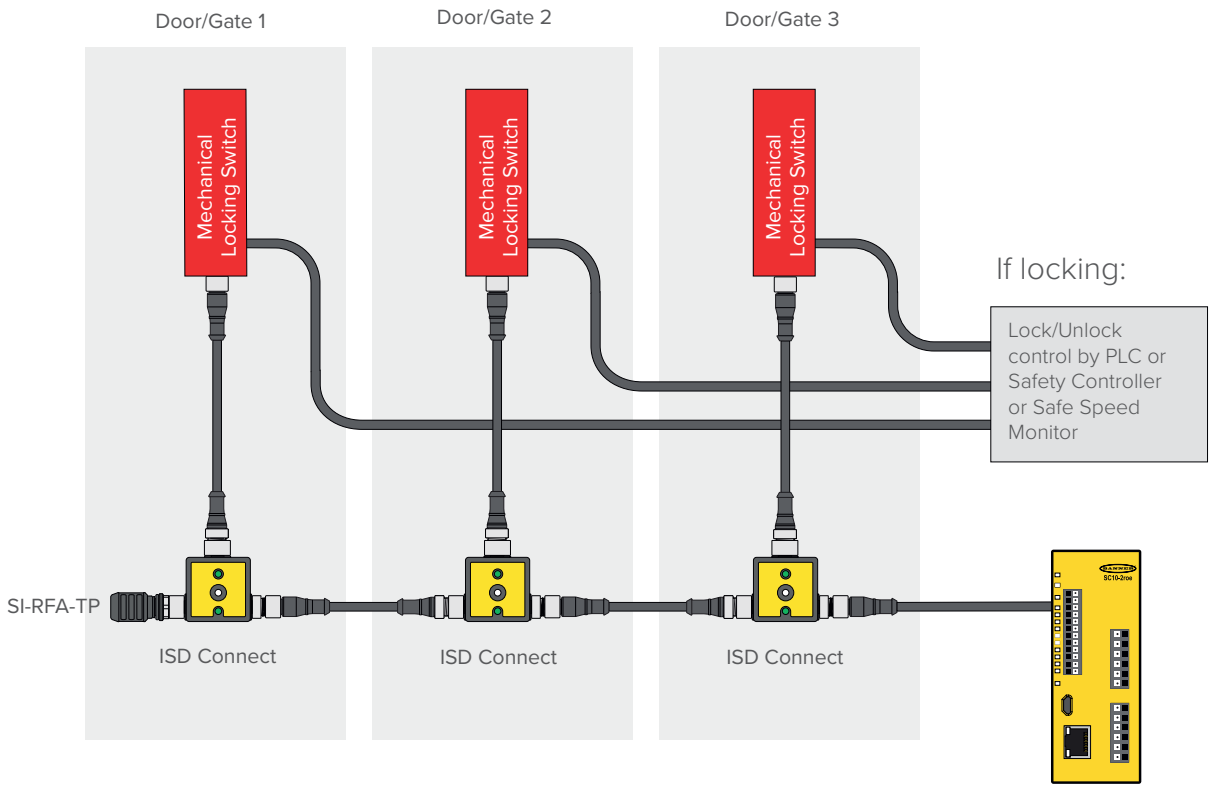

This example shows a mechanical locking switch used to monitor and/or keep a door/gate closed in a slight safety risk application as determined by a Risk Assessment. This achieves Safety Category 2.

Based on the model of the mechanical locking switch used the ISD Connect will be able to determine if the door/gate is closed or closed and locked.

The ISD Connect can also determine which door/gate is faulted.

Process Control

Mechanical Locking Switch with ISD Connect, SI-RFA-DM1 Controller or SC10 as a gateway

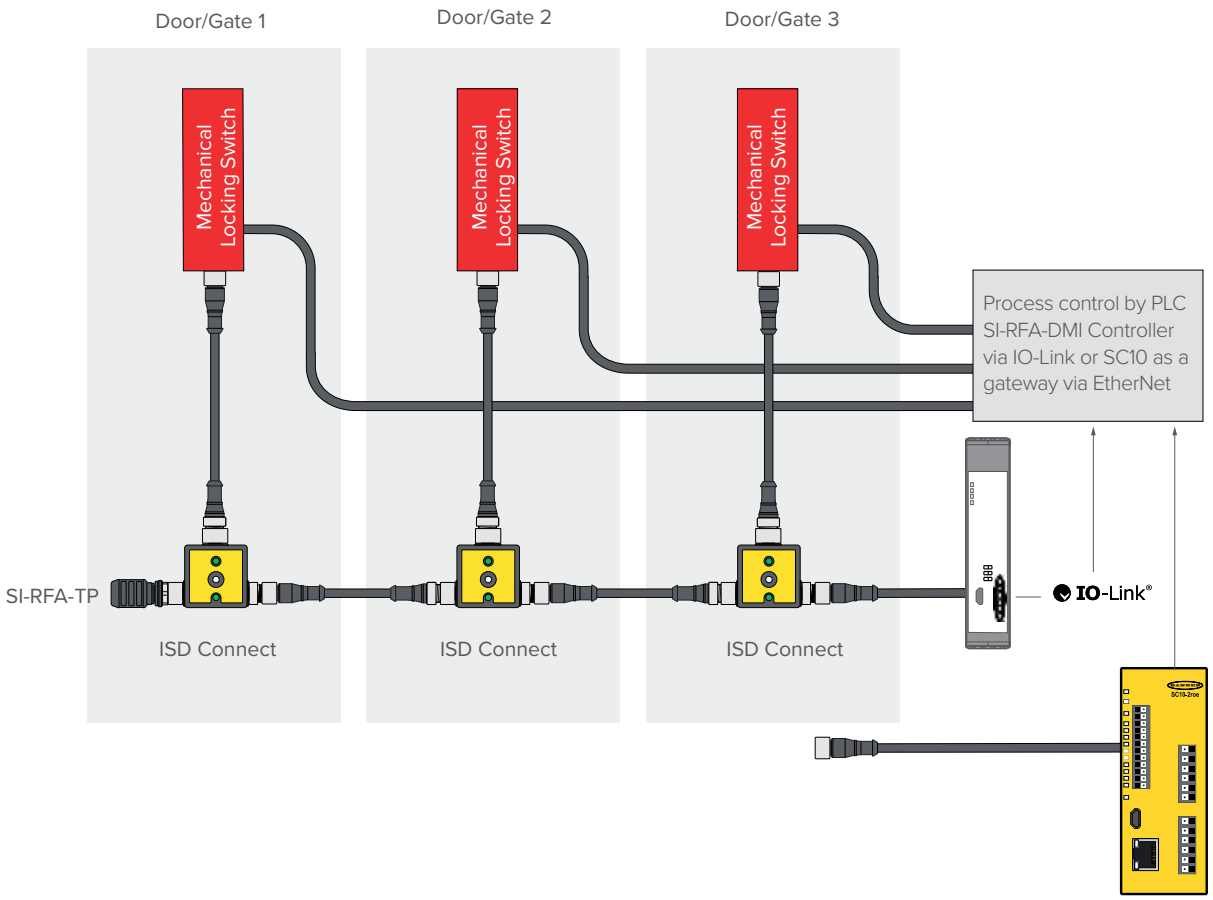

This example is not for safety applications. The mechanical locking switch is being used to lock a door/gate that must be closed in order to keep a process from being spoiled. Examples are: Silicon Wafer Processing, Food Processing, Paint Lines, Long Ovens, etc.

Based on the mechanical locking switch model used, the ISD Connect will determine if the door/gate is closed or locked or both. The ISD Connect can also determine which door/gate is faulted.

ISD information is supplied to the PLC through the SI-RFA-DM1 controller via I/O Link or through the SC10 via EtherNet.

ISD-Enabled Products by Banner

RFID Safety Switches





- High tolerance to misalignment and provides data to prevent downtime
- Basic, medium and high tamper resistance models available
- Features an IP69 rating and resistance to both vibration and metal shavings
- Cascade up to 32 sensors while achieving the highest level of safety

Illuminated E-Stops





- Illuminated base flashes red to quickly identify which button has been pressed
- Illuminated base turns green, yellow or unlit to indicate it is armed and ready for operation
- Unique OSSD Safety outputs simplify wiring and allowing it to be included in an In-Series Diagnostics (ISD) chain
- Cascade up to 32 devices while achieving the highest level of safety

SC10 Safety Controller





- Free and intuitive PC configuration software
- Connects up to 64 ISD devices, and has 6 available safe inputs for other devices
- Two independently controlled safety relay outputs, with 6 Amps each
- Industrial Ethernet two-way communication enables 256 virtual non-safe status outputs and 80 virtual non-safe inputs

ISD Connect





- Add any safety device with 2 normally closed sets of contacts to an ISD Chain
- Bright LEDs for simplified local diagnostics
- Flexible mounting in any orientation with integral mounting hole and visible LEDs on both sides
- Add up to 32 Non-ISD devices to an ISD Chain and achieve up to the highest level of safety

Important... Read this before proceeding!

The user is responsible for satisfying all local, state, and national laws, rules, codes, and regulations relating to the use of this product and its application. Banner Engineering Corp. has made every effort to provide complete application, installation, operation, and maintenance instructions. Please contact a Banner Applications Engineer with any questions regarding this product.
The user is responsible for making sure that all machine operators, maintenance personnel, electricians, and supervisors are thoroughly familiar with and understand all instructions regarding the installation, maintenance, and use of this product, and with the machinery it controls. The user and any personnel involved with the installation and use of this product must be thoroughly familiar with all applicable standards, some of which are listed within the specifications. Banner Engineering Corp. makes no claim regarding a specific recommendation of any organization, the accuracy or effectiveness of any information provided, or the appropriateness of the provided information for a specific application.