# QS18CV20 Mechanically Adjustable Convergent Diffuse Sensors

Original Instructions
p/n: 210004 Rev. D
20-May-26
© Banner Engineering Corp. All rights reserved. www.bannerengineering.com

ПРОМЭЛЕКТРОНИКА/ sales@prom-elec.com

# Contents

**Chapter 1 Features ..... 3**
Models ..... 3
Overview ..... 4
Adjustable Convergent Diffuse Sensing—Theory of Operation ..... 4
Specifications ..... 5
FCC Part 15 Class A for Unintentional Radiators ..... 5
Industry Canada ICES-003(A) ..... 5
Dimensions ..... 6
Performance Curves—Excess Gain ..... 7

**Chapter 2 Installation ..... 8**
Wiring Diagrams ..... 8
Set the Location of Peak Excess Gain ..... 9
Sensing Reliability ..... 9

**Chapter 3 Accessories ..... 10**
Quick-Disconnect (QD) Cordsets ..... 10
Mounting Brackets ..... 11

**Chapter 4 Product Support and Maintenance ..... 12**
Clean Sensor with Compressed Air Then Isopropyl Alcohol ..... 12
Repairs and Translations (No Field-Replaceable Parts) ..... 12
Discontinued Models ..... 14
Contact Us ..... 15
Banner Engineering Corp Limited Warranty ..... 15

© Banner Engineering Corp. All rights reserved. www.bannerengineering.com

Chapter Contents

Models ..... 3
Overview ..... 4
Specifications ..... 5

# Chapter 1 Features

Miniature sensors with visible red LED

- Economical adjustable convergent diffuse sensor for part presence detection
- Simple multi-turn screw adjustment of the receiver lens changes the location of peak excess gain and maximum sensing distance
- 10 V DC to 30 V DC operation, with complementary NPN or PNP outputs, depending on model
- Robust immunity to energy-efficient lights in the environment

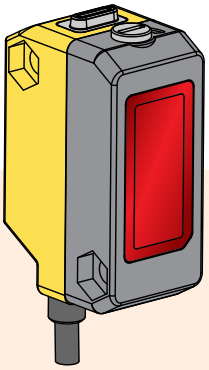

**WARNING:**

- **Do not use this device for personnel protection**
- Using this device for personnel protection could result in serious injury or death.
- This device does not include the self-checking redundant circuitry necessary to allow its use in personnel safety applications. A device failure or malfunction can cause either an energized (on) or de-energized (off) output condition.

# Models

| Models | Range | Output Type | Connection |
|---|---|---|---|
| QS18VN6CV20Q5 | Lens Adjuster fully clockwise: 1 mm to 150 mm on 90% white card<br>Lens Adjuster fully counter-clockwise: 1 mm to 30 mm on 90% white card | NPN | 150 mm (6 in) cable with a 4-pin M12 quick disconnect (QD) |
| QS18VP6CV20 | | PNP | 4-wire 2 m (6.5 ft) cable |
| QS18VP6CV20 W/30 | | PNP | 4-wire 9 m cable |
| QS18VP6CV20Q | | PNP | 150 mm (6 in) with a 4-pin M8 male QD |
| QS18VP6CV20Q5 | | PNP | 150 mm (6 in) cable with a 4-pin M12 quick disconnect (QD) |

Models with a quick disconnect require a mating cordset.

For a list of discontinued models, see Discontinued Models.


© Banner Engineering Corp. All rights reserved.
www.bannerengineering.com

# Overview

*Sensor Features*

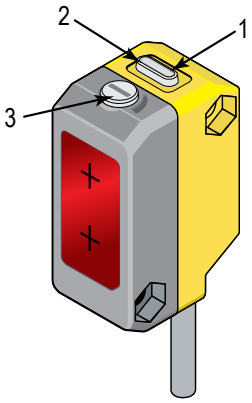


The QS18 Adjustable Convergent Diffuse Sensor is a full-featured sensor in a miniature package. It provides control of the location of the peak excess gain, enabling economical detection of targets and stable rejection of background objects. Models are available with a visible red LED sensing beam.

This adjustable convergent diffuse sensor is able to detect objects of relatively low reflectivity, while ignoring other objects in the background (beyond the cutoff point). The convergent point and peak excess gain location distance is mechanically adjustable, using the 5-turn adjustment screw on the sensor top. Backgrounds and background objects must *always* be placed beyond the maximum detection distance.

1. Green: Power Indicator
2. Amber: Light Sensed Indicator (Flashes for Low Gain Conditions)
3. Lens Adjuster

## Adjustable Convergent Diffuse Sensing—Theory of Operation

*Adjustable convergent diffuse sensing concept*

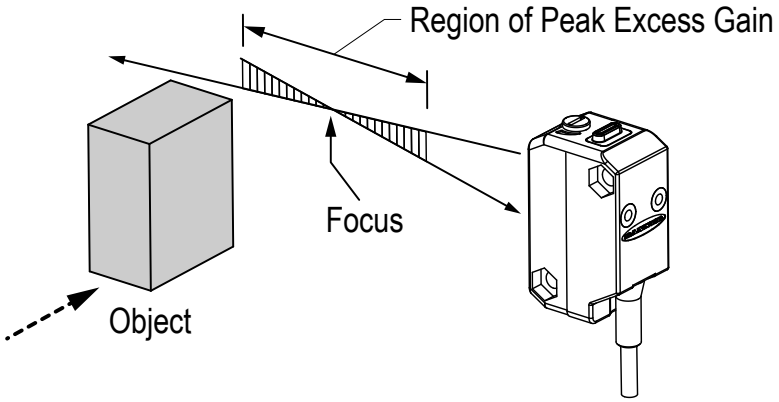


The adjustable convergent diffuse sensing mode is a hybrid concept that combines:

- Intensity-based diffuse sensing
- Convergent optics, which provide a concentrated light intensity signal at a user-set distance
- Mechanically adjustable receiver lens, which allows the user to set up a reliable detection in many cost-sensitive applications

This sensing mode provides a cost-effective sensor solution in some applications where a full background suppression sensor is too costly. The sensor uses a single photo detector, which receives light when the combination of lens position and target distance fall within the sensing range of the sensor. If the amplitude of the received light exceeds the detection


© Banner Engineering Corp. All rights reserved.
www.bannerengineering.com

threshold, the output turns ON. Targets beyond the maximum sensing distance, or targets with extremely low reflectivity result in the output remaining OFF.

At the convergent optical distance of 20 mm nominally, the peak excess gain exceeds 100 times the detection threshold, so very dark targets can be reliably detected. The peak excess gain location can be moved between approximately 10 mm to 30 mm by adjusting the lens position with the Lens Adjuster.

Due to the finite size of the photodetector, and the ability to move the receiver lens, the excess gain off a 90% white card target can be reduced to < 1 at convenient distances of 50 mm to 150 mm allowing the sensor to ignore background objects.

# Specifications

**Supply Voltage**

10 V DC to 30 V DC (10% maximum ripple) at less than 25 mA, exclusive of load

**Sensing Beam**

Visible red LED, 633 nm

**Supply Protection Circuitry**

Protected against reverse polarity and transient voltages

**Output Configuration**

Current sourcing (PNP) or current sinking (NPN), depending on model.

Rating: 100 mA maximum

OFF-State leakage current: < 50 µA at 30 V dc

ON-State saturation voltage: < 1.5 V dc at 10 mA; < 3 V dc at 100 mA

**Output Response**

850 microseconds ON/OFF; 100 ms delay on power-up; outputs do not conduct during this time

**Repeatability**

89 microseconds

**Spot Size (horizontal x vertical mm)**

10 mm distance: 5 x 5 mm

100 mm distance: 4 x 4 mm

200 mm distance: 9 x 9 mm

**Adjustments**

Five-turn adjustment screw sets cutoff distance between minimum and maximum positions, clutched at both ends of travel

**Construction**

ABS housing, acrylic lens cover, 2.5 mm and 3 mm mounting hardware included

**Connections**

2 m (6.5 ft) unterminated 4-wire PVC-jacketed cable, 9 m (30 ft) unterminated 4-wire PVC-jacketed cable, 150 mm (6 in) PVC-jacketed cable with a 4-pin M8 male quick-disconnect connector, or 150 mm (6 in) PVC-jacketed cable with a 4-pin M12 male quick-disconnect connector, depending on model

**Environmental Rating**

IP67, NEMA 6, UL Type 1

**Operating Conditions**

–20 °C to +70 °C (–4 °F to +158 °F)

95% at +50 °C maximum relative humidity (non-condensing)

**Certifications**

Banner Engineering BV
Park Lane, Culliganlaan 2F bus 3
1831 Diegem, BELGIUM

Turck Banner LTD Blenheim House
Blenheim Court
Wickford, Essex SS11 8YT
GREAT BRITAIN

**Required Overcurrent Protection**

**WARNING:** Electrical connections must be made by qualified personnel in accordance with local and national electrical codes and regulations.

Overcurrent protection is required to be provided by end product application per the supplied table.

Overcurrent protection may be provided with external fusing or via Current Limiting, Class 2 Power Supply.

Supply wiring leads < 24 AWG shall not be spliced.

For additional product support, go to www.bannerengineering.com.

| Supply Wiring (AWG) | Required Overcurrent Protection (A) | Supply Wiring (AWG) | Required Overcurrent Protection (A) |
|---|---|---|---|
| 20 | 5.0 | 26 | 1.0 |
| 22 | 3.0 | 28 | 0.8 |
| 24 | 2.0 | 30 | 0.5 |

## FCC Part 15 Class A for Unintentional Radiators

This equipment has been tested and found to comply with the limits for a Class A digital device, pursuant to Part 15 of the FCC Rules. These limits are designed to provide reasonable protection against harmful interference when the equipment is operated in a commercial environment. This equipment generates, uses, and can radiate radio frequency energy and, if not installed and used in accordance with the instruction manual, may cause harmful interference to radio communications. Operation of this equipment in a residential area is likely to cause harmful interference in which case the user will be required to correct the interference at his own expense.

(Part 15.21) Any changes or modifications not expressly approved by the party responsible for compliance could void the user's authority to operate this equipment.

## Industry Canada ICES-003(A)

This device complies with CAN ICES-3 (A)/NMB-3(A). Operation is subject to the following two conditions: 1) This device may not cause harmful interference; and 2) This device must accept any interference received, including interference that may cause undesired operation.


© Banner Engineering Corp. All rights reserved.
www.bannerengineering.com

Cet appareil est conforme à la norme NMB-3(A). Le fonctionnement est soumis aux deux conditions suivantes : (1) ce dispositif ne peut pas occasionner d'interférences, et (2) il doit tolérer toute interférence, y compris celles susceptibles de provoquer un fonctionnement non souhaité du dispositif.

## Dimensions

All measurements are listed in millimeters [inches], unless noted otherwise. The measurements provided are subject to change.

*QS18CV20 Dimensions*

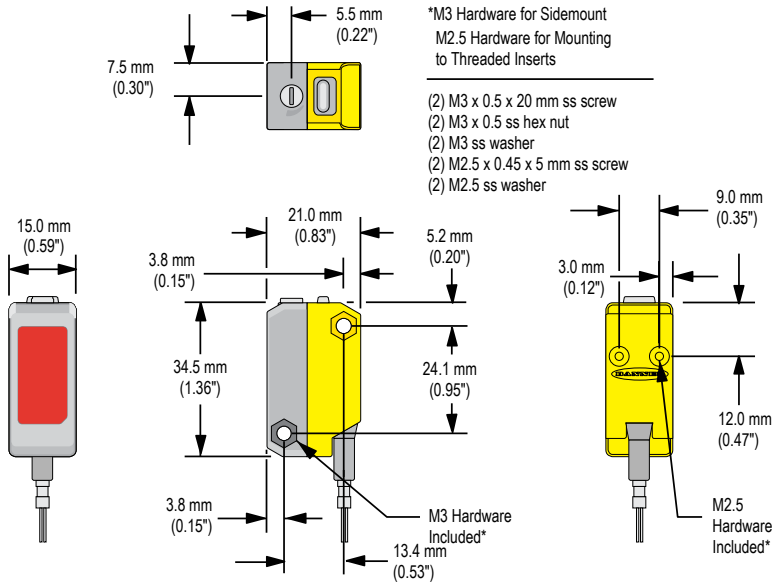



© Banner Engineering Corp. All rights reserved.
www.bannerengineering.com

## Performance Curves—Excess Gain

The performance is based on 90% reflectance white test card

*Excess Gain at Limits of Lens Adjuster Positions*

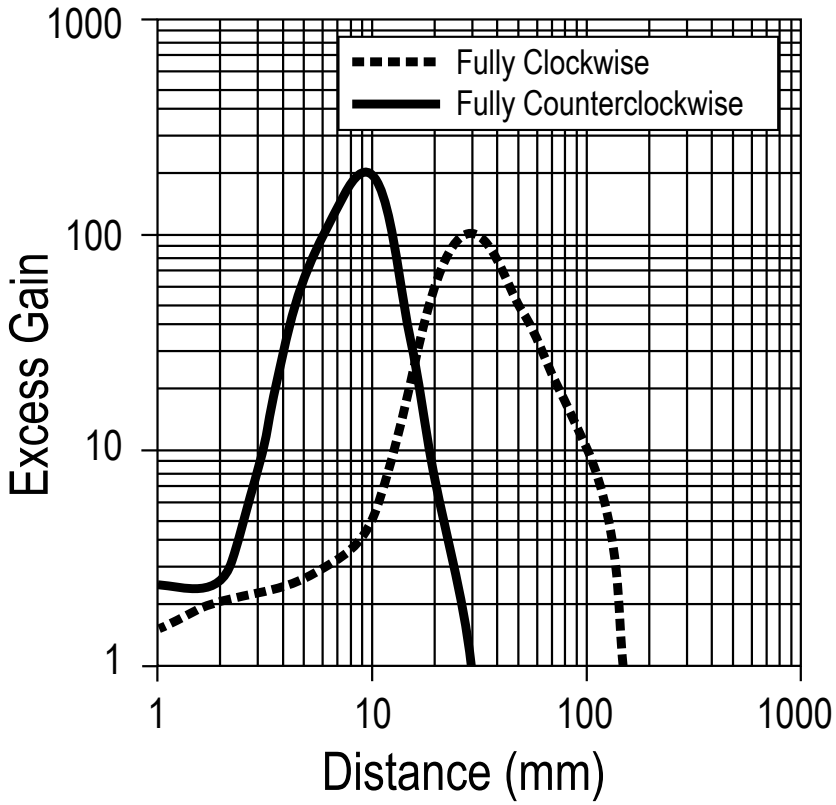



© Banner Engineering Corp. All rights reserved.

Chapter Contents

Wiring Diagrams ..... 8
Set the Location of Peak Excess Gain ..... 9
Sensing Reliability ..... 9

# Chapter 2 Installation

## Wiring Diagrams

Cabled wiring diagrams are shown.Quick disconnect wiring diagrams are functionally identical.

*NPN (sinking) outputs*

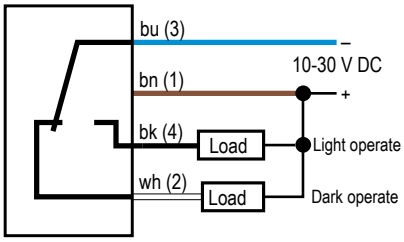


*PNP (sourcing) outputs*

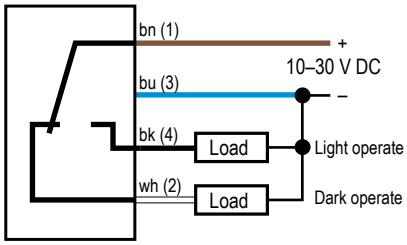


*4-pin M12 Male*

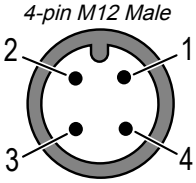


*4-pin M8 Male*

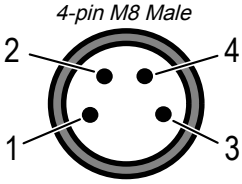


1. Brown
2. White
3. Blue
4. Black

In dark operate (DO) mode, the output is ON when the target returns less light to the sensor than the configured target and OFF when the sensor detects more light than the configured/taught target.

In light operate (LO) mode, the output is ON when the target returns the same or more light to the sensor and OFF when the sensor detects less light than the configured/taught target.

In **diffuse** sensing modes, light operate is active when the target is present and dark operate is active when the target is absent.


© Banner Engineering Corp. All rights reserved.
www.bannerengineering.com

# Set the Location of Peak Excess Gain

Use the following procedure to set the sensor for reliable detection of the target and non-detection of the background.

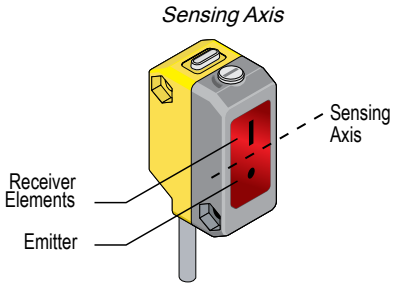


When an object approaches from the side, the most reliable sensing usually occurs when the line of approach is parallel to the sensing axis.

1. Check the application parameters, such as target reflectivity and sensor-to-target distance, evaluate the background conditions, and compare them with the excess gain graph in "Figure: Excess Gain at Limits of Lens Adjuster Positions" on page 7.
2. Turn the lens adjuster fully counterclockwise.

   This maximizes peak excess gain, minimizes hysteresis, and minimizes the influence of the background beyond 30 mm.
3. Present the target at the desired sensing range, and verify stable detection of the target (amber LED is on).
4. If the amber LED is off, turn the lens adjuster clockwise to increase the detection range until the target is detected (amber LED is on).
5. Remove the target, and verify that the background is not detected (amber LED is off).
6. If the background is detected (the amber LED is on or flashes), turn the lens adjuster counter-clockwise until the amber LED is off when no target is present.
7. Present the target at the desired sensing range, and verify that the amber LED turns on.
8. If the amber LED remains off, turn the lens adjuster clockwise to increase the detection range.
9. Remove the target.
   - If the amber LED turns off, the sensor is ready for use in the application.
   - If the amber LED remains on or flashes, the influence from the background is too strong. Evaluate the use of an adjustable field background suppression sensor instead of an adjustable diffuse convergent sensor.

# Sensing Reliability

For the highest sensitivity, position the target at or near the distance of maximum excess gain. See "Figure: Excess Gain at Limits of Lens Adjuster Positions" on page 7. The maximum excess gain for the sensor is between 10 mm and 30 mm, depending on the lens adjuster setting. Sensing at or near this distance makes the maximum use of the sensor's available sensing power. The background must be placed beyond the maximum sensing distance. Note that the reflectivity of the background surface also may affect the maximum sensing distance.


© Banner Engineering Corp. All rights reserved.
www.bannerengineering.com

Chapter Contents

Quick-Disconnect (QD) Cordsets ..... 10
Mounting Brackets ..... 11

# Chapter 3 Accessories

## Quick-Disconnect (QD) Cordsets

Use the M8 cordsets with QS18 with Q suffix; use the M12 cordsets with QS18 with Q5 suffix.

| 4-Pin Single-Ended Snap-on M8 Female Cordsets | | | | | |
|---|---|---|---|---|---|
| **Model** | **Length** | **Style** | **Dimensions** | **Pinout (Female)** | |
| **PKG4-2** | 2.03 m (6.66 ft) | Straight | 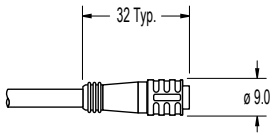 | 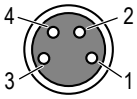 | 1 = Brown<br>2 = White<br>3 = Blue<br>4 = Black |

| 4-pin Single-Ended M12 Female Cordsets (datasheet p/n 235937) | | | | |
|---|---|---|---|---|
| **Model** | **Length** | **Dimensions (mm)** | **Pinout (Female)** | |
| **BC-M12F4-22-1** | 1 m (3.28 ft) | 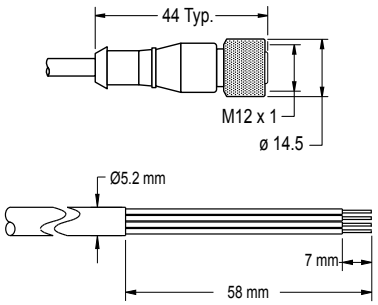 | 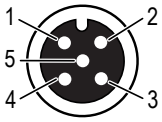 | 1 = Brown<br>2 = White<br>3 = Blue<br>4 = Black<br>5 = Unused<br>c UL us LISTED |
| **BC-M12F4-22-2** | 2 m (6.56 ft) | | | |
| **BC-M12F4-22-5** | 5 m (16.4 ft) | | | |
| **BC-M12F4-22-8** | 8 m (26.25 ft) | | | |
| **BC-M12F4-22-10** | 10 m (30.81 ft) | | | |
| **BC-M12F4-22-15** | 15 m (49.2 ft) | | | |
| **BC-M12F4-22-20** | 20 m (65.61 ft) | | | |
| **BC-M12F4-22-25** | 25 m (82.02 ft) | | | |
| **BC-M12F4-22-30** | 30 m (98.42 ft) | | | |

| 4-pin Single-Ended M12 Female Right-Angle Cordsets (datasheet p/n 235937) | | | | |
|---|---|---|---|---|
| **Model** | **Length** | **Dimensions (mm)** | **Pinout (Female)** | |
| **BC-M12F4A-22-1** | 1 m (3.28 ft) | 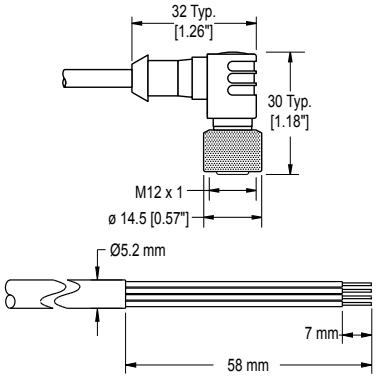 | 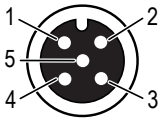 | 1 = Brown<br>2 = White<br>3 = Blue<br>4 = Black<br>5 = Unused<br>c UL us LISTED |
| **BC-M12F4A-22-2** | 2 m (6.56 ft) | | | |
| **BC-M12F4A-22-5** | 5 m (16.4 ft) | | | |
| **BC-M12F4A-22-8** | 8 m (26.25 ft) | | | |
| **BC-M12F4A-22-10** | 10 m (30.81 ft) | | | |
| **BC-M12F4A-22-15** | 15 m (49.2 ft) | | | |


© Banner Engineering Corp. All rights reserved.
www.bannerengineering.com

# Mounting Brackets

All measurements are listed in millimeters, unless noted otherwise. The measurements provided are subject to change.

**SMBQS18A**

- Wrap-around protection bracket
- Die-cast bracket
- Base fits 18 mm threaded hole
- Metal hex nut, lock washer and grommet included
- Mounting holes specially designed for QS18AF sensors
- CAD Files: DXF, PDF, IGS, STP

**Hole size:** A = ø 15.3

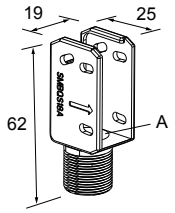


**SMBQS18AF**

- Right-angle mounting bracket
- 14-ga. 304 stainless steel
- CAD Files: DXF, PDF, IGS, STP

**Hole center spacing:** A to B = 20.3
**Hole size:** A = 4.3 × 9.4, B = ø 4.3

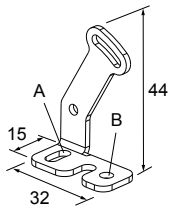


**SMBQS18YL**

- Heavy-duty die-cast bracket for industrial protection
- Replaceable window (A)
- M18 vertical mount-option
- Nut and lock washer included
- Only for use with Class 2 laser models
- CAD Files: DXF, PDF, IGS, STP

**Hole size:** B = ø 15.3

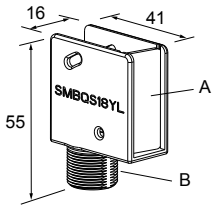



© Banner Engineering Corp. All rights reserved.
www.bannerengineering.com

Chapter Contents

Clean Sensor with Compressed Air Then Isopropyl Alcohol ..... 12
Repairs and Translations (No Field-Replaceable Parts) ..... 12
Discontinued Models ..... 14
Contact Us ..... 15
Banner Engineering Corp Limited Warranty ..... 15

# Chapter 4 Product Support and Maintenance

## Clean Sensor with Compressed Air Then Isopropyl Alcohol

Handle the sensor with care during installation and operation. Sensor windows soiled by fingerprints, dust, water, oil, etc. create stray light that may degrade the peak performance of the sensor.

Blow dust from the sensor using filtered, compressed air. If the sensor is still dirty, gently wipe the sensor with a dry optical cloth. If the dry optical cloth does not remove all residue, use 70% isopropyl alcohol on a clean optical cloth, then dry with a clean dry optical cloth and blow with filtered, compressed air. Do not use any other chemicals for cleaning.

## Repairs and Translations (No Field-Replaceable Parts)

**English**

Contact Banner Engineering for troubleshooting of this device. **Do not attempt any repairs to this Banner device; it contains no field-replaceable parts or components.** If the device, device part, or device component is determined to be defective by a Banner Applications Engineer, they will advise you of Banner's RMA (Return Merchandise Authorization) procedure.

```
IMPORTANT: If instructed to return the device, pack it with care. Damage that occurs in return
shipping is not covered by warranty.
```

Obtain assistance with product repairs by contacting your local Banner Engineering Corp distributor or by calling Banner directly at (763) 544-3164. Access literature translated into your native language on the Banner website at www.bannerengineering.com or contact Banner directly at (763) 544-3164.

**Deutsch**

Wenden Sie sich zur Fehlerbehebung dieses Geräts an Banner Engineering. **Versuchen Sie nicht, Reparaturen an diesem Banner-Gerät vorzunehmen. Das Gerät enthält keine am Einsatzort auszuwechselnden Teile oder Komponenten.** Wenn ein Banner-Anwendungstechniker zu dem Schluss kommt, dass dieses Gerät, ein Teil oder eine Komponente davon defekt ist, erhalten Sie von dem Techniker Erläuterungen zu Banners RMA-Verfahren (Return Merchandise Authorization) für die Warenrückgabe.

```
WICHTIG: Wenn Sie der Techniker anweist, das Gerät zurückzusenden, verpacken Sie es bitte
sorgfältig. Transportschäden bei der Rücksendung werden von der Garantie nicht abgedeckt.
```

Unterstützung bei Produktreparaturen erhalten Sie von Ihrem örtlichen Banner Engineering Corp Händler oder direkt von Banner unter Tel. (763) 544-3164. Die in Ihre Muttersprache übersetzte Literatur finden Sie auf der Banner-Website unter www.bannerengineering.com oder kontaktieren Sie Banner direkt unter Tel. (763) 544-3164.

**Français**

Pour plus d'informations sur le dépannage du produit, contactez Banner Engineering. **Ne tentez pas de réparer ce dispositif Banner. Il ne contient aucun composant ou pièce qui puisse être remplacé sur place.** Si un ingénieur de Banner conclut que le dispositif ou l'une de ses pièces ou composants est défectueux, il vous informera de la procédure à suivre pour le retour des produits (RMA).

```
Important : Si vous devez retourner le dispositif, emballez-le avec soin. Les dégâts
occasionnés pendant le transport de retour ne sont pas couverts par la garantie.
```

Pour vous aider lors de la réparation de produits, contactez votre distributeur Banner local our appelez directement Banner au (763) 544-3164. La documentation traduite dans votre langue est disponible sur le site internet de Banner www.bannerengineering.com ou contactez directement Banner au (763) 544-3164.


© Banner Engineering Corp. All rights reserved.
www.bannerengineering.com

**Italiano**

Per le procedure di individuazione e riparazione dei guasti di questo dispositivo, contattare Banner Engineering. **Non tentare di riparare questo dispositivo Banner, in quanto non contiene parti o componenti sostituibili dall'utente.** Se il dispositivo, una parte del dispositivo o un componente del dispositivo viene riscontrato difettoso da un tecnico Banner, il nostro personale vi comunicherà la procedura da seguire per ottenere l'autorizzazione al reso.

**Importante:** Se si ricevono istruzioni di rispedire il dispositivo al produttore, imballarlo con cura. I danni dovuti al trasporto non sono coperti dalla garanzia.

Per assistenza nelle riparazioni dei prodotti, contattare il distributore locale Banner Engineering Corp o contattare direttamente Banner al numero (763) 544-3164. È possibile accedere alla documentazione tradotta nella propria lingua madre sul sito Web Banner all'indirizzo www.bannerengineering.com o contattare direttamente Banner al numero (763) 544-3164.

**Español**

Comuníquese con Banner Engineering para solucionar de problemas de este dispositivo. **No intente ninguna reparación a este dispositivo de Banner, contiene piezas o componente que no se pueden cambiar en terreno.** Si algún ingeniero de aplicaciones de Banner determina que el dispositivo, alguna de las piezas o alguno de los componentes del dispositivo está defectuoso, le informará el procedimiento de autorización de devolución de mercancía (RMA, por sus siglas en inglés) de Banner.

**Importante:** Si se le solicita devolver el dispositivo, empáquelo con cuidado. Puede haber daños durante el envío de devolución que no estén cubiertos por la garantía.

Para reparaciones de productos, por favor contacte a su distribuidor local de Banner Engineering o llame a Banner directamente al 00 1 (763) 544-3164. Vea la literatura traducida en su idioma en el sitio web Banner en www.bannerengineering.com o comuníquese con Banner directamente al 00 1 (763) 544-3164.

**中国人**

如需对本装置进行故障排查，请联系邦纳。**请勿尝试自行维修该邦纳装置；本装置不包含任何可在现场更换的部件或组件。** 若经邦纳应用工程师确认设备、设备部件或组件存在缺陷，他们将告知您邦纳退货授权 (RMA) 流程。

**重要注意事项：** 如被要求退回装置，请妥善包装后寄回。退货运输过程中发生的损坏不在保修范围内。

请联系当地的 Banner Engineering Corp 经销商或直接致电 Banner +1 (763) 544-3164，以获得产品维修帮助。请访问邦纳网站 www.bannerengineering.com 或直接拨打 +1 (763) 544-3164 联系邦纳，获取翻译成您母语的资料。

**한국인**

이 장치의 문제를 해결하려면 Banner Engineering에 문의하십시오. **이 Banner 장치에는 현장에서 교체할 수 있는 부품 또는 구성품이 없으므로 수리를 시도하지 마십시오.** Banner 애플리케이션 엔지니어가 장치, 장치 부품 또는 장치 구성품에 결함이 있는 것으로 판정하면, Banner의 RMA(제품 반송 승인)절차에 대해 안내해 드립니다.

**중요:** 제품을 반송하도록 안내 받으셨다면 잘 포장해주십시오. 반송 도중에 발생한 손상은 보증 서비스가 적용되지 않습니다.

제품 수리에 대한 지원은 지역 Banner Engineering Corp 대리점에 문의하거나 Banner에 직접 (763) 544-3164로 문의하실 수 있습니다. 사용자의 모국어로 번역된 자료는 Banner 웹사이트 www.bannerengineering.com에서 액세스하거나 Banner에 직접 (763) 544-3164로 문의하실 수 있습니다.

**日本語**

この装置のトラブルシューティングについては、バナーエンジニアリングにお問い合わせください。**このバナー装置には、現場では交換できない部品またはコンポーネントが含まれているため、修理を試みてはいけません。** バナーのアプリケーションエンジニアが装置、装置の部品、または装置のコンポーネントに欠陥があると判断した場合、バナーのRMA（返品承認）手続きについてお知らせします。

**重要 ：** 返品を指示された場合は、装置を丁寧に梱包してください。返品時に発生した破損は保証の対象外となります。

製品の修理については、最寄りのBanner Engineering Corp代理店にお問い合わせいただくか、米国+1 (763) 544-3164まで直接お電話でお問い合わせください。バナーのウェブサイト（www.bannerengineering.com）でお客様の言語に翻訳された資料にアクセスするか、米国+1 (763) 544-3164まで直接お電話でお問い合わせください。


© Banner Engineering Corp. All rights reserved.
www.bannerengineering.com

**čeština**

Pro řešení problémů se zařízením kontaktujte společnost Banner Engineering. **Neprovádějte žádné opravy zařízení Banner. Neobsahují žádné komponenty nebo části, které by byly vyměnitelné.** Pokud je zařízení, jeho část nebo díl označen technikem společnosti Banner jako poškozený, bude Vám doporučeno vyplnit reklamační RMA protokol.

```
Důležité: Pokud byl vydán požadavek na vrácení zařízení, pečlivě ho zabalte. Poškození vzniklé
při dopravě není považováno za záruční opravu.
```

Pokud produkt potřebuje opravu, vyžádejte si pomoc od místního distributora společnosti Banner Engineering Corp nebo přímo na telefonním čísle (763) 544-3164. Dokumentaci přeloženou do vašeho jazyka si vyhledejte na webových stránkách společnosti Banner na adrese www.bannerengineering.com nebo se obraťte přímo na společnost Banner na telefonním čísle (763) 544-3164.

**Polski**

W celu rozwiązania problemów z urządzeniem należy skontaktować się z działem technicznym firmy Banner Engineering. **Pod żadnym pozorem nie próbuj naprawiać tego urządzenia firmy Banner; nie zawiera ono części ani elementów, które można wymieniać samodzielnie.** Jeśli urządzenie, jego część lub element zostaną uznane za wadliwe przez inżyniera technicznego Banner, poinformuje on użytkownika o firmowej procedurze zwrotu towaru (RMA) firmy Banner.

```
Ważne: Jeśli urządzenie ma zostać zwrócone, należy je starannie zapakować. Uszkodzenia powstałe
podczas odsyłki nie są objęte gwarancją.
```

Aby uzyskać pomoc w zakresie naprawy produktu, należy skontaktować się z lokalnym dystrybutorem Banner Engineering Corp lub zadzwonić bezpośrednio do firmy Banner pod numer (763) 544-3164. Dostęp do literatury przetłumaczonej na swój język ojczysty można uzyskać na stronie internetowej firmy Banner pod adresem www.bannerengineering.com lub kontaktując się bezpośrednio z firmą Banner pod numerem (763) 544-3164.

**Português**

Entre em contato com a Engenharia da Banner para a solução de problemas deste dispositivo. **Não tente fazer nenhum reparo neste dispositivo Banner; ele não contém peças ou componentes substituíveis em campo.** Se um técnico de aplicações da Banner determinar que o dispositivo, peça ou componente do dispositivo está com defeito, ele o informará sobre o procedimento de RMA (Autorização de Devolução de Mercadoria) da Banner.

```
Importante: Se for instruído a devolver o dispositivo, embale-o com cuidado. Os danos ocorridos
no transporte de devolução não são cobertos pela garantia.
```

Obtenha assistência para reparos do produto entrando em contato com o distribuidor local da Banner Engineering Corp ou ligando diretamente para a Banner no telefone (763) 544-3164. Acesse a literatura traduzida para seu idioma nativo no site da Banner em www.bannerengineering.com ou entre em contato diretamente com a Banner pelo telefone (763) 544-3164.

**Türkçe**

Bu cihazda sorun giderme işlemleri için Banner Engineering ile iletişime geçin. **Bu Banner cihazını onarmaya çalışmayın; cihaz sahada değiştirilebilir parça veya bileşen içermez.** Bir Banner Uygulama Mühendisi tarafından cihazın, cihazın bir parçasının veya bir cihaz bileşeninin kusurlu olduğu tespit edilirse, Banner RMA (İade Mal Yetkilendirme) prosedürü hakkında bilgilendirilirsiniz.

```
ÖNEMLİ: İade etmeniz istenirse, cihazı dikkatli bir şekilde paketleyin. İade nakliyesinde
meydana gelecek hasarlar garanti kapsamında değildir.
```

Yerel Banner Engineering Corp distribütörünüzle iletişime geçerek veya doğrudan (763) 544-3164 numaralı telefondan Banner'ı arayarak ürün onarımlarıyla ilgili yardım alın. Ana dilinize çevrilmiş dokümanlara www.bannerengineering.com adresindeki Banner web sitesinden erişebilir veya (763) 544-3164 numaralı telefondan doğrudan Banner ile iletişime geçebilirsiniz.

# Discontinued Models

The following models are no longer available for order but are still covered by the information in this document.

| Models | Output Type | Connection |
|---|---|---|
| QS18VN6CV20 | NPN | 4-wire 2 m (6.5 ft) cable |
| QS18VN6CV20 W/30 | NPN | 4-wire 9 m cable |
| QS18VN6CV20Q | NPN | 150 mm (6 in) with a 4-pin M8 male QD |
| QS18VP6CV20 | PNP | 4-wire 2 m (6.5 ft) cable |


© Banner Engineering Corp. All rights reserved.
www.bannerengineering.com

# Contact Us

Banner Engineering Corp. | 9714 Tenth Avenue North | Plymouth, MN 55441, USA | Phone: + 1 888 373 6767

For worldwide locations and local representatives, visit www.bannerengineering.com.

# Banner Engineering Corp Limited Warranty

Banner Engineering Corp. warrants its products to be free from defects in material and workmanship for one year following the date of shipment. Banner Engineering Corp. will repair or replace, free of charge, any product of its manufacture which, at the time it is returned to the factory, is found to have been defective during the warranty period. This warranty does not cover damage or liability for misuse, abuse, or the improper application or installation of the Banner product.

**THIS LIMITED WARRANTY IS EXCLUSIVE AND IN LIEU OF ALL OTHER WARRANTIES WHETHER EXPRESS OR IMPLIED (INCLUDING, WITHOUT LIMITATION, ANY WARRANTY OF MERCHANTABILITY OR FITNESS FOR A PARTICULAR PURPOSE), AND WHETHER ARISING UNDER COURSE OF PERFORMANCE, COURSE OF DEALING OR TRADE USAGE.**

This Warranty is exclusive and limited to repair or, at the discretion of Banner Engineering Corp., replacement. **IN NO EVENT SHALL BANNER ENGINEERING CORP. BE LIABLE TO BUYER OR ANY OTHER PERSON OR ENTITY FOR ANY EXTRA COSTS, EXPENSES, LOSSES, LOSS OF PROFITS, OR ANY INCIDENTAL, CONSEQUENTIAL OR SPECIAL DAMAGES RESULTING FROM ANY PRODUCT DEFECT OR FROM THE USE OR INABILITY TO USE THE PRODUCT, WHETHER ARISING IN CONTRACT OR WARRANTY, STATUTE, TORT, STRICT LIABILITY, NEGLIGENCE, OR OTHERWISE.**

Banner Engineering Corp. reserves the right to change, modify or improve the design of the product without assuming any obligations or liabilities relating to any product previously manufactured by Banner Engineering Corp. Any misuse, abuse, or improper application or installation of this product or use of the product for personal protection applications when the product is identified as not intended for such purposes will void the product warranty. Any modifications to this product without prior express approval by Banner Engineering Corp will void the product warranties. All specifications published in this document are subject to change; Banner reserves the right to modify product specifications or update documentation at any time. Specifications and product information in English supersede that which is provided in any other language. For the most recent version of any documentation, refer to: www.bannerengineering.com.

For patent information, see www.bannerengineering.com/patents.


© Banner Engineering Corp. All rights reserved.

LinkedIn

X

Facebook

Instagram




© 2026. All rights reserved.