MODEL NO.	"L"	P/N
PIT26UM4-VL	2000	87724
PIT23UM4-VL	1000	87723

NOTES:

1. OPERATING TEMPERATURE -55°C ~ +70°C.
2. MINIMUM BEND RADIUS R15.

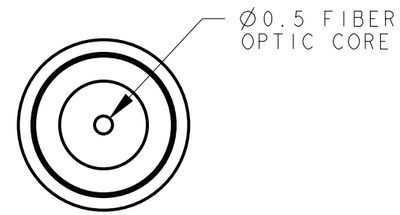

DETAIL A
SCALE 6:1

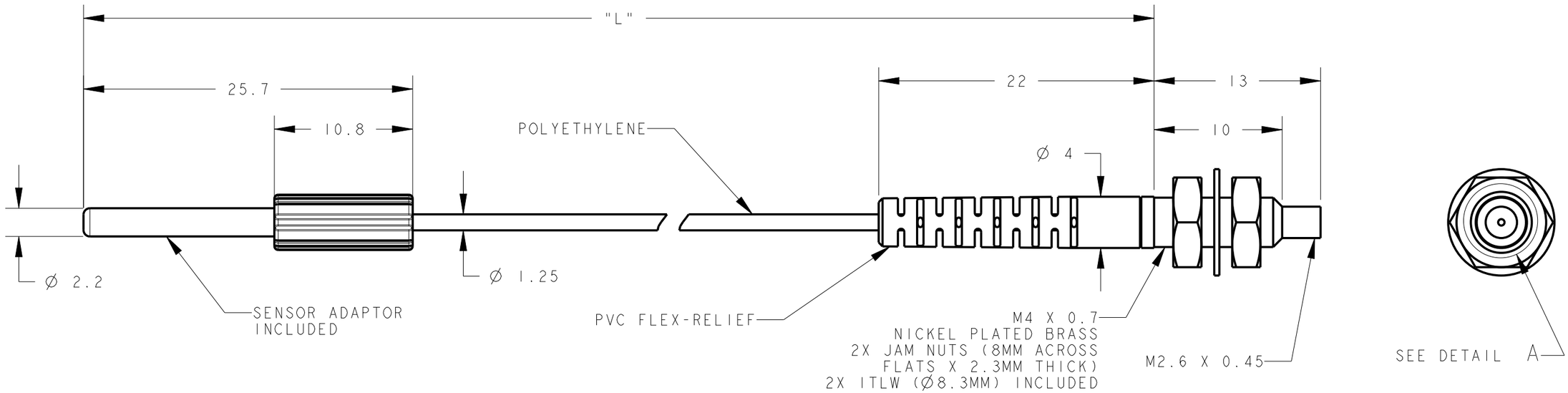

NOTES:
1. ALL DIMENSIONS ARE MILLIMETERS [INCHES] UNLESS OTHERWISE NOTED.
2. REFER TO "www.bannerengineering.com" FOR ADDITIONAL DATA AND SPECIFICATIONS.

This drawing is the property of BANNER ENGINEERING CORP. Any use or reproduction, in any form, without prior written permission of Banner is prohibited.
© 2015 Banner Engineering Corp.

THIRD ANGLE PROJECTION

BANNER ENGINEERING CORP.
www.bannerengineering.com

TITLE

PIT2 M4 VALUE LINE SERIES UNTERMINATED

SIZE	DRAWING NO.	REV.
B	178353	B
SCALE 3:1	SHEET 1 OF 1	

CREO

ПРОМЭЛЕКТРОНИКА/ sales@prom-elec.com