QCM50 Color Sensor

Datasheet

High-performance color sensor with IO-Link



- Reliable color detection across the entire range of the sensor
- Up to 12 colors can be detected with one sensor, which saves inventory costs and enables faster changeover
- Available in anti-glare models to reliably detect reflective targets
- Intuitive configuration with integrated digital display and on-board buttons
- IO-Link communication for remote configuration and monitoring

WARNING:

- **Do not use this device for personnel protection**
- Using this device for personnel protection could result in serious injury or death.
- This device does not include the self-checking redundant circuitry necessary to allow its use in personnel safety applications. A device failure or malfunction can cause either an energized (on) or de-energized (off) output condition.

Models

Models	Feature	Range (mm)	Spot Size (mm)	Outputs [1]	Stored Colors	Connection
QCM50-K3D25-Q8-5 [2]	Glare suppression	18 to 32	6 × 6 at 25 mm	3 Discrete	7	Integral 5-pin M12/Euro-style quick disconnect
QCM50-K1D40-Q8-4	Small spot size	18 to 60	4 × 4 at 40 mm	1 Discrete	1	Integral 4-pin M12/Euro-style quick disconnect
QCM50-K3D40-Q8-5			4 × 4 at 40 mm	3 Discrete	7	Integral 5-pin M12/Euro-style quick disconnect
QCM50-K5D40-Q8-8			4 × 4 at 40 mm	5 Discrete	12	Integral 8-pin M12/Euro-style quick disconnect
QCM50-K1D60-Q8-4	Long range	20 to 150	8 × 8 at 60 mm	1 Discrete	1	Integral 4-pin M12/Euro-style quick disconnect
QCM50-K3D60-Q8-5			8 × 8 at 60 mm	3 Discrete	7	Integral 5-pin M12/Euro-style quick disconnect
QCM50-K5D60-Q8-8			8 × 8 at 60 mm	5 Discrete	12	Integral 8-pin M12/Euro-style quick disconnect

Wiring Diagrams

4-pin M12/Euro-style

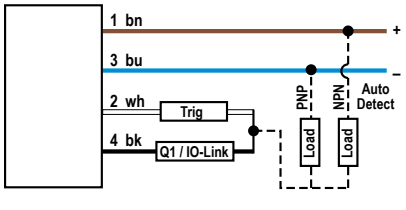

5-pin M12/Euro-style

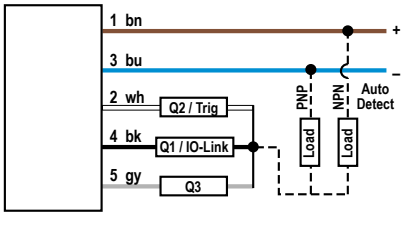

8-pin M12/Euro-style

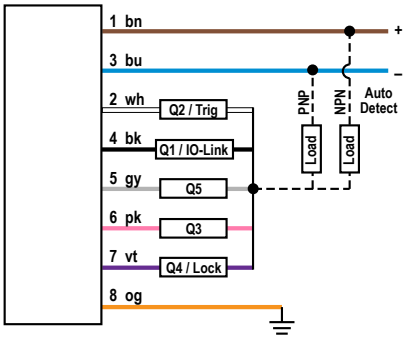

The QCM50 Color Sensor requires a shielded cable. Refer to the Accessories list in the QCM50 Color Sensor Instruction Manual (p/n *209633*) for a list of recommended cables.

1 PNP/NPN Auto-Detect based on output connection.
2 Polarized optics (anti-glare). Not for use with black objects.

Original Document
209634 Rev. A (068-14865)

15 April 2019

209634

ПРОМЭЛЕКТРОНИКА/ sales@prom-elec.com

Menu System

The following functions are available using the sensor's menu system.

Teaching the Sensor

Sub-Menu	Options	Description	Navigate
Sensor mode	Color	The output is only active when the sensor sees a target color that matches a taught color.	Menu > Sensor Mode > Color
	Best Fit	The output that matches the target color best is active (at least two colors must be taught to use this mode). One output will always be active when a color target is present in this mode. (Not available on 1 output models.)	Menu > Sensor Mode > Best Fit
Teach Methods	Color	The sensor is taught a single static color point.	Menu > Teach Q/C > Color
	Color Scan	The sensor is taught a color space. The sensor will learn multiple color points until **Stop** is pressed.	Menu > Teach Q/C > Color Scan
Tolerance	Adjustable 1 to 9	The tolerance adjustment populates after teaching in Color Mode. The tolerance adjustment can also be accessed any time through the menu system after a Color Mode teach has been completed. Higher tolerance number results in more color variations accepted (Tolerance levels range from 1-9). Tolerance is not available when using Best Fit Mode.	Menu > Config Q > Tolerance

Output Configuration and Sensor Settings

Sub-Menu	Description	Navigate
Smart Functions	The Smart Functions menu options set the delays and timers. On/Off Delays can be programmed between 0 to 100 ms. Turn off Impulse if a one-shot is needed.	Menu > Config Q > SmartFunc
Outputs	Program the outputs individually to be normally open or normally closed.	Menu > Config Q > NO/NC
	Program the outputs as a group to be normally open or normally closed, to be PNP or NPN, and to define the output speed. PNP/NPN and speed are not configurable on an individual output.	Menu > Config Q All
Sensor Settings	Restores the sensor to factory default settings.	Menu > Settings > Factory Reset

Specifications

Supply Voltage and Current
18 to 30 V dc
Less than 60 mA, exclusive of load

Supply Protective Circuitry
Reverse polarity protection UB / short-circuit protection (Q)

Power On Delay
< 150 ms

Warm-up Time
5 minutes

Vibration and Mechanical Shock
EN 60947-5-2

Certifications

Light Used
LED, white

Response Time Q
180 µs

LED class
LED risk group 2
(EN 62471:2008)

Maximum Capacitive Load
< 100 nF

Control Input
Trigger; keylock

Construction
Materials: Zinc die-cast, matt chrome housing; PMMA front screen and display

Indicators
LED 1 (amber): output indicator
LED 2 (green): power indicator, IO-Link
LED 2 (red): status/error indicator

IO-Link
Communication mode: COM 2
Minimum cycle time: 4 ms
SIO mode: Compatible
Length of process data: 2 bytes / 6 bytes
Specification: 1.1

Output Ratings
N.O. / N.C.
Output current, Ie: < 100 mA
Switching output (Q): Auto-detect (Q1)1 / NPN / PNP

Environmental Conditions
Operating: –20 °C to +55 °C (–4 °F to +131°F)
Storage: –20 °C to +80 °C (–4 °F to +176 °F)

Environmental Rating[3]
IEC IP67, IEC IP69

[3] With connected IP 67 / IP 69 plug

Required Overcurrent Protection

WARNING: Electrical connections must be made by qualified personnel in accordance with local and national electrical codes and regulations.

Overcurrent protection is required to be provided by end product application per the supplied table.
Overcurrent protection may be provided with external fusing or via Current Limiting, Class 2 Power Supply.
Supply wiring leads < 24 AWG shall not be spliced.
For additional product support, go to *www.bannerengineering.com*.

Supply Wiring (AWG)	Required Overcurrent Protection (Amps)
20	5.0
22	3.0
24	2.0
26	1.0
28	0.8
30	0.5

Dimensions

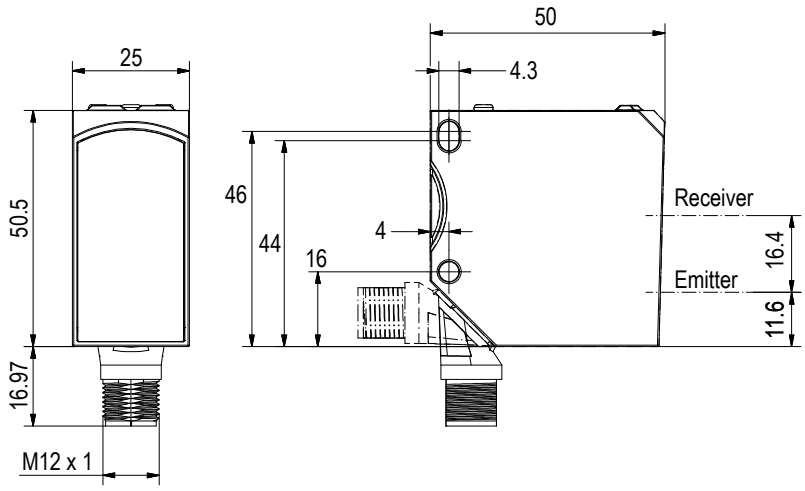

All measurements are listed in millimeters, unless noted otherwise.

Banner Engineering Corp. Limited Warranty

Banner Engineering Corp. warrants its products to be free from defects in material and workmanship for one year following the date of shipment. Banner Engineering Corp. will repair or replace, free of charge, any product of its manufacture which, at the time it is returned to the factory, is found to have been defective during the warranty period. This warranty does not cover damage or liability for misuse, abuse, or the improper application or installation of the Banner product.

THIS LIMITED WARRANTY IS EXCLUSIVE AND IN LIEU OF ALL OTHER WARRANTIES WHETHER EXPRESS OR IMPLIED (INCLUDING, WITHOUT LIMITATION, ANY WARRANTY OF MERCHANTABILITY OR FITNESS FOR A PARTICULAR PURPOSE), AND WHETHER ARISING UNDER COURSE OF PERFORMANCE, COURSE OF DEALING OR TRADE USAGE.

This Warranty is exclusive and limited to repair or, at the discretion of Banner Engineering Corp., replacement. **IN NO EVENT SHALL BANNER ENGINEERING CORP. BE LIABLE TO BUYER OR ANY OTHER PERSON OR ENTITY FOR ANY EXTRA COSTS, EXPENSES, LOSSES, LOSS OF PROFITS, OR ANY INCIDENTAL, CONSEQUENTIAL OR SPECIAL DAMAGES RESULTING FROM ANY PRODUCT DEFECT OR FROM THE USE OR INABILITY TO USE THE PRODUCT, WHETHER ARISING IN CONTRACT OR WARRANTY, STATUTE, TORT, STRICT LIABILITY, NEGLIGENCE, OR OTHERWISE.**

Banner Engineering Corp. reserves the right to change, modify or improve the design of the product without assuming any obligations or liabilities relating to any product previously manufactured by Banner Engineering Corp. Any misuse, abuse, or improper application or installation of this product or use of the product for personal protection applications when the product is identified as not intended for such purposes will void the product warranty. Any modifications to this product without prior express approval by Banner Engineering Corp will void the product warranties. All specifications published in this document are subject to change; Banner reserves the right to modify product specifications or update documentation at any time. Specifications and product information in English supersede that which is provided in any other language. For the most recent version of any documentation, refer to: *www.bannerengineering.com*.

For patent information, see *www.bannerengineering.com/patents*.

© Banner Engineering Corp. All rights reserved