MODEL NO.	"L"	"D"	P/N
BAI7SMTA	2134 [84]	1.52 [.06]	81264
BAI.57SMTA	2134 [84]	2.29 [.09]	73140
BAI.59SMTA	2743 [108]	2.29 [.09]	71936
BAI1SMTA	305 [12]	1.52 [.06]	24851
BA.751.7SMTA	508 [20]	1.17 [.046]	24561
BAI.51.9SMTA	584 [23]	2.29 [.09]	24543
BA.756SMTA	1829 [72]	1.17 [.046]	24339
BAI.51.7SMTA	508 [20]	2.29 [.09]	24317
BAI.55SMTA	1524 [60]	2.29 [.09]	23782
BAI6SMTA	1829 [72]	1.52 [.06]	74706
BAI.58SMTA	2438 [96]	2.29 [.09]	23468
BAI.51.5SMTA	457 [18]	2.29 [.09]	22249
BAI5SMTA	1524 [60]	1.52 [.06]	21865
BAI.53SMTAM600	914 [36]	2.29 [.09]	21833
BAI.54SMTA	1219 [48]	2.29 [.09]	21821
BAI.56SMTA	1829 [72]	2.29 [.09]	21505
BA.753SMTA	914 [36]	1.17 [.046]	21274
BAI3SMTA	914 [36]	1.52 [.06]	21224
BAI.52SMTA	610 [24]	2.29 [.09]	20609
BAI.53SMTA	914 [36]	2.29 [.09]	20879

NOTE - M600 SUFFIX INDICATES SENSING TIP MADE WITH EPOXY THAT WILL WITHSTAND UP TO 600°F

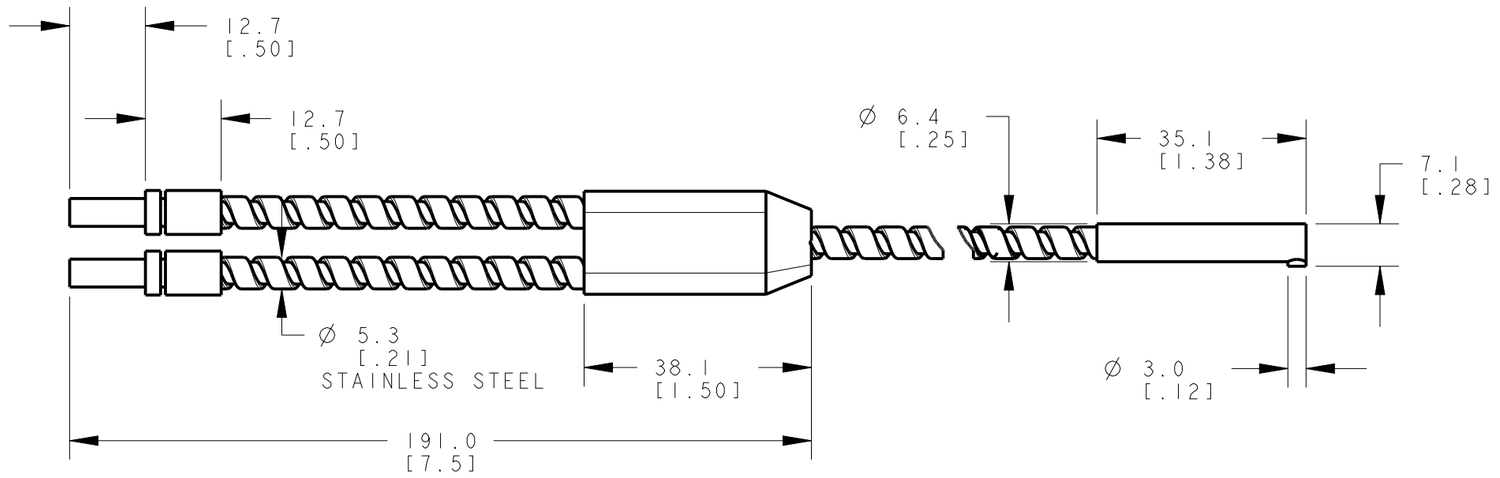

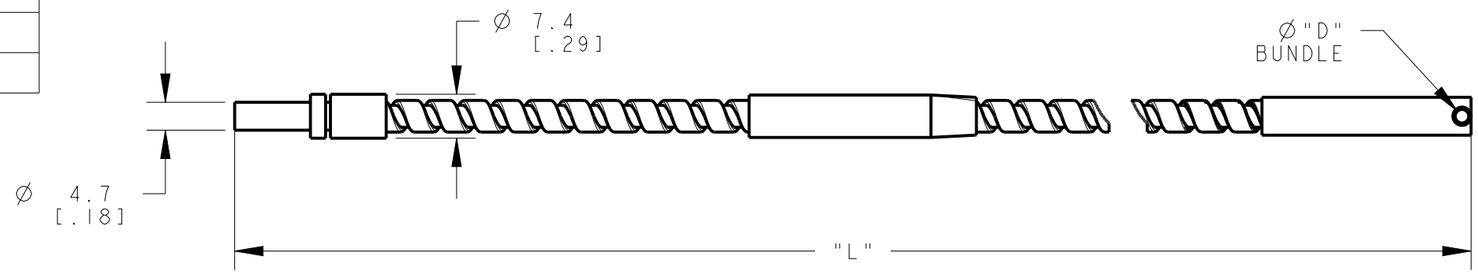

NOTES:
1. ALL DIMENSIONS ARE MILLIMETERS [INCHES] UNLESS OTHERWISE NOTED.
2. REFER TO "www.bannerengineering.com" FOR ADDITIONAL DATA AND SPECIFICATIONS.

This drawing is the property of BANNER ENGINEERING CORP. Any use or reproduction, in any form, without prior written permission of Banner is prohibited.
© 2015 Banner Engineering Corp.

THIRD ANGLE PROJECTION

BANNER ENGINEERING CORP.
www.bannerengineering.com

TITLE

BAI SMTA SERIES

SIZE	DRAWING NO.	REV.
B	193314	A
SCALE 1:1	SHEET 1 OF 1	

CREO

ПРОМЭЛЕКТРОНИКА/ sales@prom-elec.com