MODEL NO.	"L"	P/N
PBT610U	3048 [120]	56114
PBT660U	18288 [720]	76920
PBT630U	9144 [360]	68651
PBT630UMSS	9144 [360]	51804
PBT615U	4572 [180]	51826
PBT6100U	30,480 [1200]	45088
PBT66U	2000 [79]	39982

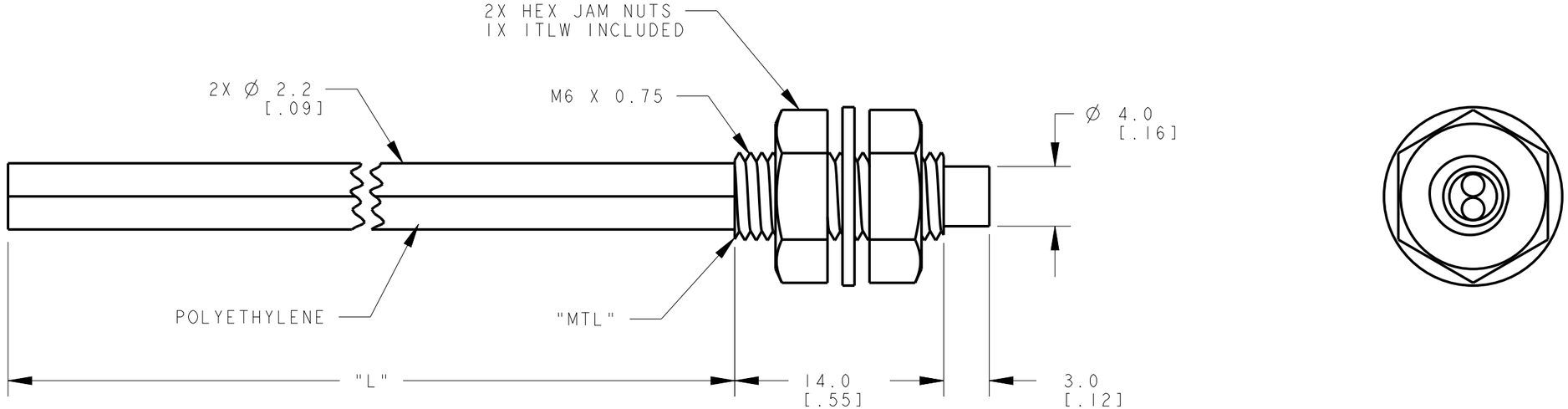

NOTES:
1. ALL DIMENSIONS ARE MILLIMETERS [INCHES] UNLESS OTHERWISE NOTED.
2. REFER TO "www.bannerengineering.com" FOR ADDITIONAL DATA AND SPECIFICATIONS.

This drawing is the property of BANNER ENGINEERING CORP. Any use or reproduction, in any form, without prior written permission of Banner is prohibited.
© Banner Engineering Corp.

THIRD ANGLE PROJECTION

BANNER ENGINEERING CORP.
www.bannerengineering.com

TITLE

PBT6 SERIES UNTERMINATED

SIZE	DRAWING NO.	REV.
B	161876	A
SCALE 3:1	SHEET 1 OF 1	

CREO

ПРОМЭЛЕКТРОНИКА/ sales@prom-elec.com