ECONO-BEAM®

Opposed mode sensor pairs for 120V ac operation

BANNER
the photoelectric specialist

- **Compact, self-contained modulated infrared opposed mode sensor pairs for 120V ac**
- **FET solid-state ac output, 3-wire hookup; light-operate or dark operate receiver models**
- **6 foot (1,8 meter) sensing range**
- **LED indicator lights when receiver sees its modulated emitter**
- **Rugged, epoxy-encapsulated construction: meets NEMA standards 1, 3, 4, 12, and 13**

ISO9002 DOCUMENTED QUALITY

AC ECONO-BEAM emitter/receiver pair

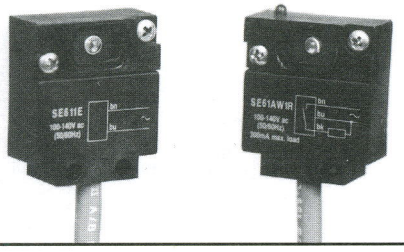

Description

Banner ac ECONO-BEAM opposed mode emitter/receiver pairs are designed to provide reliable sensing performance primarily in OEM applications where ac operation, small size, and low cost are important. AC ECONO-BEAMs operate from 120Vac (±20%). They are totally self-contained; no external amplification is required. ECONO-BEAMs employ state-of-the-art SMD circuitry, totally solid-state and epoxy-encapsulated for unlimited life. Optical performance information is given below.

All units are protected against false pulse on power-up and inductive load transients. Receivers are available with either light- or dark-operate output. Outputs use a solid-state FET capable of 300 mA maximum (continuous) load. The output of the model SE61AW1R light-operate receiver conducts whenever the receiver sees the light from the modulated SE611E emitter. Dark-operate receiver SE61RW1R conducts whenever the emitter's light is blocked. Receivers have a red top-mounted indicator LED that lights whenever the receiver is seeing the

Opposed mode

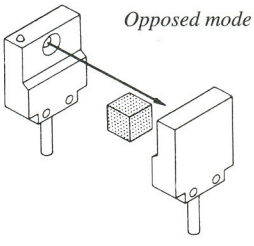

(continued on page 2)

Excess Gain Curve

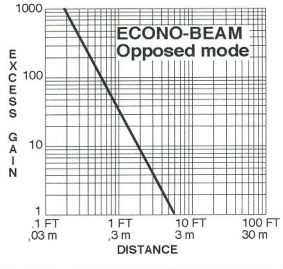

Beam Pattern

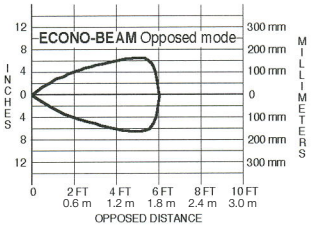

Specifications

SUPPLY VOLTAGE: 120V ac (±20%, 50-60Hz)

OUTPUT CONFIGURATION (receivers): solid-state (FET). SE61AW1R is normally open (light operate); SE61RW1R is normally closed (dark operate).

OUTPUT RATING (receivers): *maximum steady-state load capability* 300 mA to 50 °C ambient (122 °F). *Inrush capability* 1 amp for 20 milliseconds (non-repetitive). *Off-state leakage current* less than 50 µA rms. *On-state voltage drop* ≤ 3 volts at 300 mA load, ≤2 volts at 15 mA load.

OUTPUT PROTECTION: protected against false pulse on power-up and inductive load transients. False pulse protection causes 20ms delay upon power-up (output is non-conducting during this time).

RESPONSE TIME (receivers): 10 milliseconds "on", 5 milliseconds "off", independent of signal strength. The response time specification of the load should be considered when important.

REPEATABILITY of RESPONSE: 1 millisecond, independent of signal strength.

LIGHT BEAM: infrared (880 nm).

CONSTRUCTION: molded VALOX® housing, totally encapsulated. acrylic lenses. Meets NEMA standards 1, 2, 3, 3S, 4, 4X, 12, and 13.

CABLE: PVC-jacketed 3-wire cable. 6-1/2 foot (2 meter) length standard.

INDICATOR LED (receivers): red LED indicator on top of unit is "on" whenever the receiver is seeing the emitter's modulated light beam.

OPERATING TEMPERATURE RANGE: 0 to +50 degrees C (32 to +122 degrees F).

WARNING These photoelectric presence sensors do NOT include the self-checking redundant circuitry necessary to allow their use in personnel safety applications. A sensor failure or malfunction can result in *either* an energized or a de-energized sensor output condition.

Never use these products as sensing devices for personnel protection. Their use as safety devices may create an unsafe condition which could lead to serious injury or death.

Only MACHINE-GUARD and PERIMETER-GUARD Systems, and other systems so designated, are designed to meet OSHA and ANSI machine safety standards for point-of-operation guarding devices. No other Banner sensors or controls are designed to meet these standards, and they must NOT be used as sensing devices for personnel protection.

Printed in USA

P/N 36523 G9A

ПРОМЭЛЕКТРОНИКА/ sales@prom-elec.com

Dimension Drawing

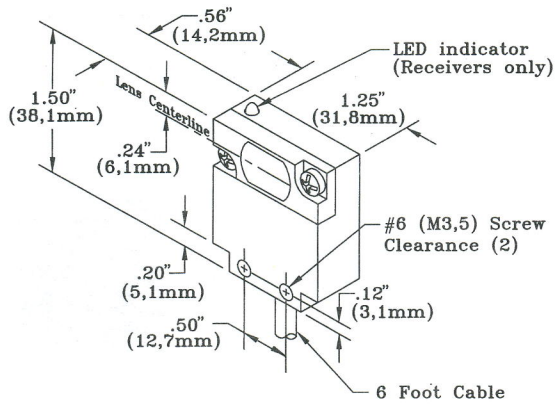

emitter's modulated light beam. Receivers use 3-wire ac hookup. See hookup diagrams, right.

AC ECONO-BEAM opposed mode sensors are housed in rugged, molded VALOX® enclosures for protection against moisture, vibration, and corrosion. Electronics are fully epoxy-encapsulated. Lenses are acrylic.

Model	Part No.	Description
SE611E	35833	Emitter, 120V ac
SE61AW1R	35832	Receiver, light operate, 120V ac
SE61RW1R	38406	Receiver, dark operate, 120V ac

Hookup Diagrams

SE611E Emitter

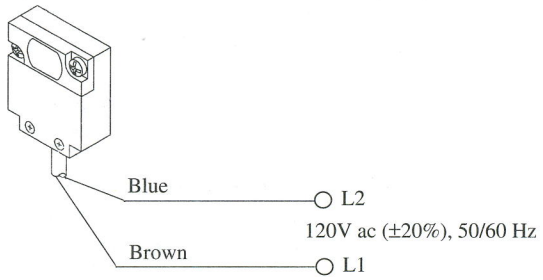

SE61AW1R and SE61RW1R Receivers

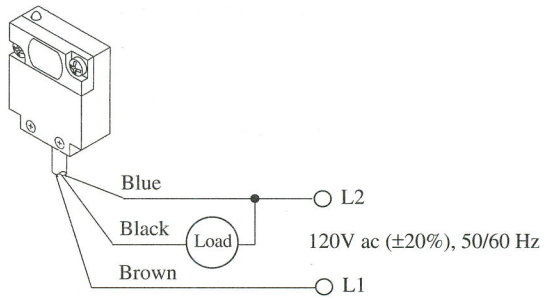

WARRANTY: Banner Engineering Corporation warrants its products to be free from defects for one year. Banner Engineering Corporation will repair or replace, free of charge, any product of its manufacture found to be defective at the time it is returned to the factory during the warranty period. This warranty does not cover damage or liability for the improper application of Banner products. This warranty is in lieu of any other warranty either expressed or implied.