MODEL NO.	"L"	P/N
PIRSIXI665.7UMAL	20000 [788]	72468
PIRSIXI6100UMPAL	30480 [1200]	75380
PIRSIXI615UMPMAL	5000 [197]	61176
PIRSIXI630UMPMAL	10000 [394]	56050
PIRSIXI66UMPMAL	2000 [79]	48066

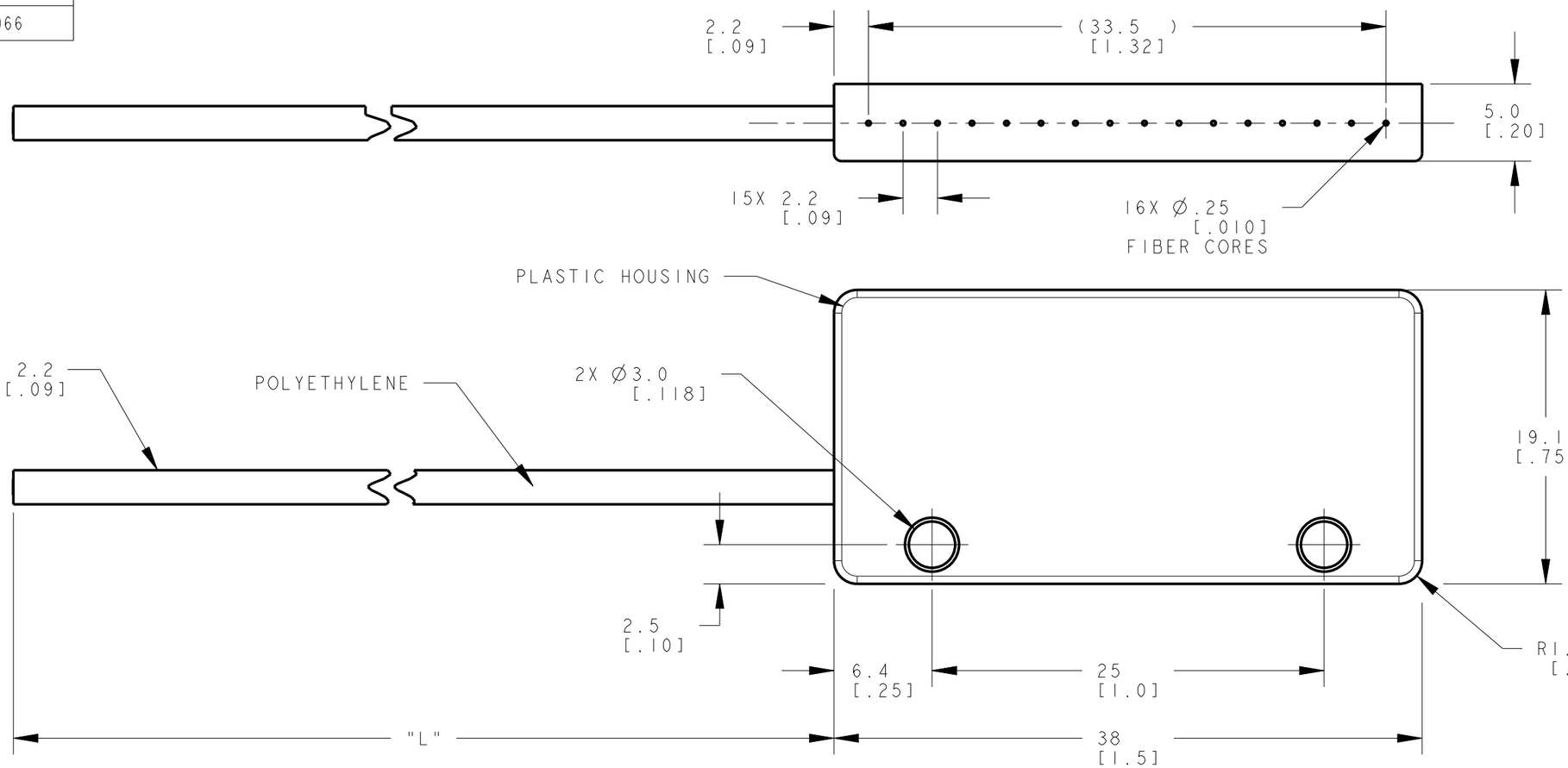

NOTES:
1. ALL DIMENSIONS ARE MILLIMETERS [INCHES] UNLESS OTHERWISE NOTED.
2. REFER TO "www.bannerengineering.com" FOR ADDITIONAL DATA AND SPECIFICATIONS.

This drawing is the property of BANNER ENGINEERING CORP. Any use or reproduction, in any form, without prior written permission of Banner is prohibited.
© Banner Engineering Corp.

THIRD ANGLE PROJECTION

BANNER ENGINEERING CORP.
www.bannerengineering.com

TITLE

PIRSIX16 SERIES UNTERMINATED 1.32 ARRAY

SIZE	DRAWING NO.	REV.
B	161896	A
SCALE 3:1	SHEET 1 OF 1	

CREO

ПРОМЭЛЕКТРОНИКА/ sales@prom-elec.com