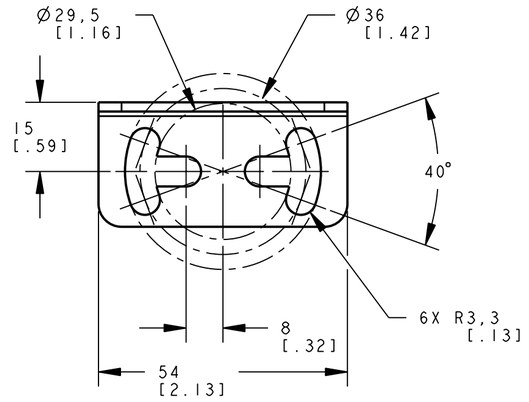

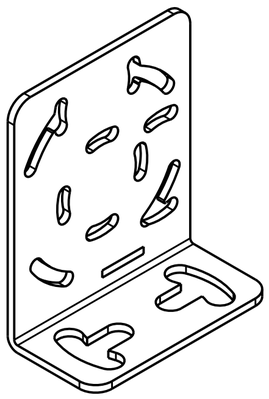

ISOMETRIC VIEW
SCALE 1:1

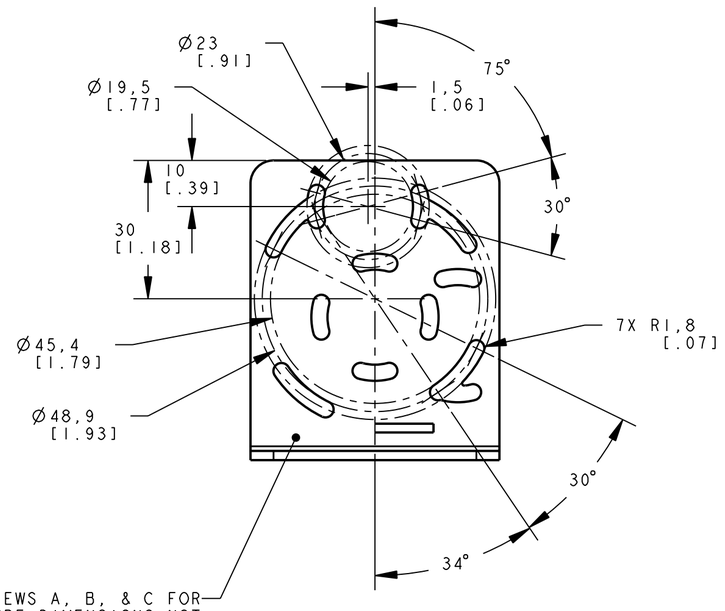

SEE VIEWS A, B, & C FOR FEATURE DIMENSIONS NOT SHOWN IN THIS VIEW

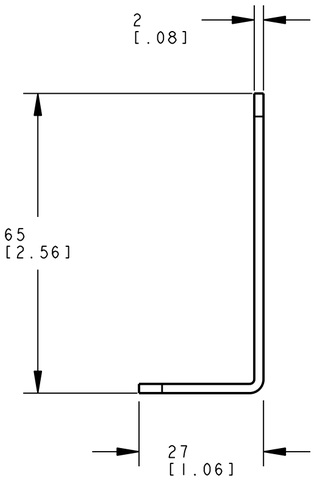

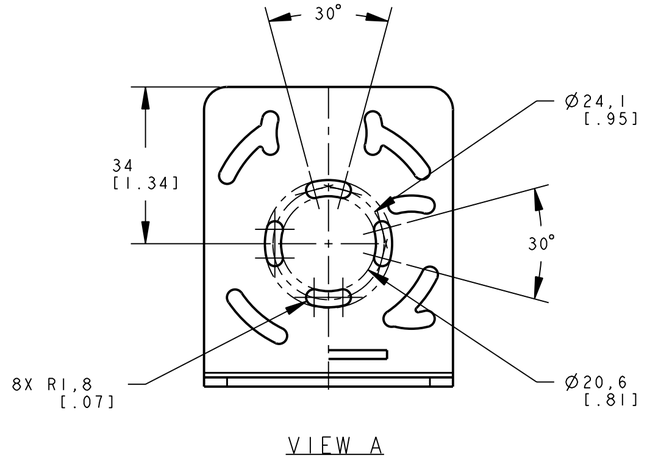

VIEW A

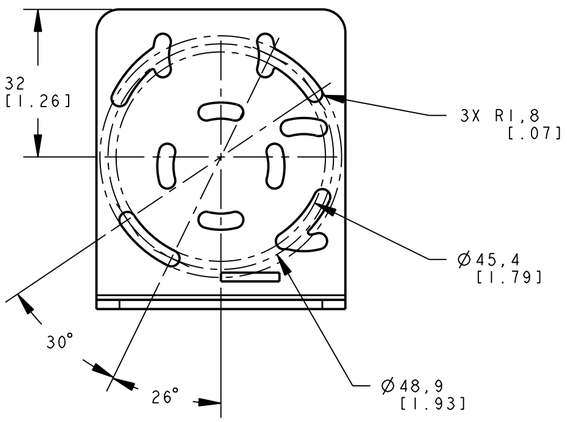

VIEW B

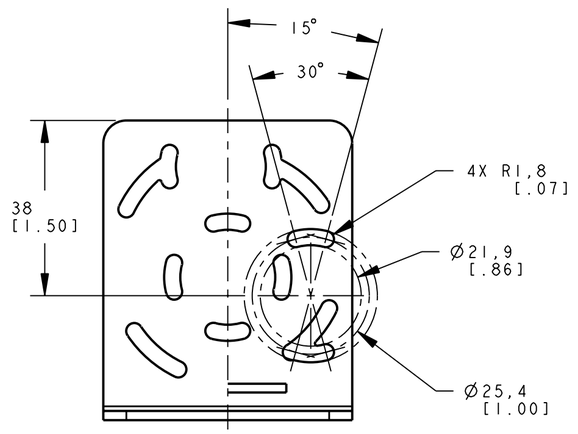

VIEW C

NOTES:
1. ALL DIMENSIONS ARE MILLIMETERS [INCHES] UNLESS OTHERWISE NOTED.

This drawing is the property of BANNER ENGINEERING CORP. and is proprietary in general and in detail. Its contents shall not be revealed to outside parties without written consent of BANNER.

THIRD ANGLE PROJECTION

BANNER ENGINEERING CORP.
P.O. BOX 9414
MINNEAPOLIS, MN 55440

TITLE
SMB46LQMT
WEB CAD DRAWINGS 2D/3D

SIZE	DRAWING NO.	REV.
C	156791	A
SCALE 1:1	SHEET 1 OF 1	

PRO/E

ПРОМЭЛЕКТРОНИКА/ sales@prom-elec.com