QS30EDV Expert Diffuse-Mode Sensor

Original Instructions
p/n: 127755 Rev. G
19-Aug-25
© Banner Engineering Corp. All rights reserved. www.bannerengineering.com

ПРОМЭЛЕКТРОНИКА/ sales@prom-elec.com

Contents

Chapter 1 Features 3
Models 3
Overview 3
Bar Graph Indicator Functions 4
Specifications 4
FCC Part 15 Class A for Unintentional Radiators 5
Industry Canada ICES-003(A) 5
Performance Curves 5
Dimensions 6

Chapter 2 Wiring 7

Chapter 3 Sensor Configuration 8
Remote Configuration 8
Returning to Run Mode 8
Two-Point Static TEACH (Threshold) 9
Dynamic TEACH and Adaptive Thresholds 10
Single-Point Window Set 11
Single-Point Light Set 12
Single-Point Dark Set 13
Setup Mode 14
Manual Adjust 14
Enabling or Disabling the Push Button 15

Chapter 4 Accessories 16

Chapter 5 Product Support and Maintenance 18
Repairs 18
Contact Us 18
Banner Engineering Corp Limited Warranty 18

© Banner Engineering Corp. All rights reserved. www.bannerengineering.com

Chapter Contents

Models 3
Overview 3
Specifications 4

Chapter 1 Features

Expert™ diffuse-mode sensor with a visible red beam



- Easy-to-set automatic Expert-style Static and Dynamic TEACH options, multiple Single-Point Set options, plus manual adjustment for fine tuning
- Smart power-control algorithm to maximize performance in low-contrast applications
- Normal mode provides 1.8 ms sensing response with improved crosstalk avoidance routine (for two sensors) and improved fluorescent light immunity
- Selectable high-speed (HS) mode option for 300-microsecond response (crosstalk avoidance and fluorescent light immunity disabled)
- Easy push-button Dark Operate/Light Operate select, output OFF-delay, and operating speed setup
- Powerful, highly collimated visible red sensing beam
- Easy-to-read operating status indicators, with an 8-segment bar graph display
- Bipolar discrete outputs, PNP and NPN
- Selectable 30-millisecond OFF-delay
- Compact housing, mounting versatility – via popular 30 mm threaded barrel or side-mount
- Tough ABS housing is rated IEC IP67; NEMA 6
- Models available with 2 m or 9 m (6.5 ft or 30 ft) cable or integral quick-disconnect

WARNING:

- **Do not use this device for personnel protection**
- Using this device for personnel protection could result in serious injury or death.
- This device does not include the self-checking redundant circuitry necessary to allow its use in personnel safety applications. A device failure or malfunction can cause either an energized (on) or de-energized (off) output condition.

Models

Models	Range	Cable	Supply Voltage	Output Type
QS30EDV	High-Speed Mode: 1,100 mm (43 inches) Normal Mode: 1,400 mm (55 inches)	2 m (6.5 ft) unterminated 5-wire PVC-jacketed cable	10 to 30 V DC	Bipolar NPN/PNP
QS30EDVQ		Integral 5-pin M12 male quick-disconnect connector		

Standard 2 m (6.5 ft) cable models are listed. To order the 9 m (30 ft) cable model, add suffix "W/30" (QS30EDV W/30). A model with a QD connector requires a mating cable; see "QS30EDV Accessories" on page 16.

Overview

The QS30EDV is an easy-to-use diffuse-mode sensor. It provides high-performance sensing in low-contrast applications. Its visible red beam provides easy sensor alignment. The sensor offers multiple configuration options, in

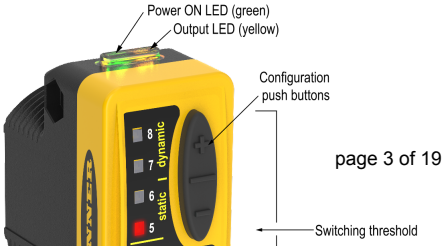

© Banner Engineering Corp. All rights reserved.
www.bannerengineering.com

addition to manual fine adjustment, remote programming, and security lockout options.

The sensor features bipolar outputs, one each NPN and PNP.

The sensor's compact housing has a large, easy-to-see bar graph display plus bright LEDs for easy configuration and status monitoring during operation. LEDs 1 through 4 of the bar graph display also show configuration status during setup. The sensor can be side-mounted, using its integral mounting holes, or front-mounted, via its 30 mm threaded barrel.

Bar Graph Indicator Functions

Run Mode. The lighted bar graph segment represents relative distance from the cutoff point. Its behavior depends on whether a sensing window or a sensing threshold is taught.

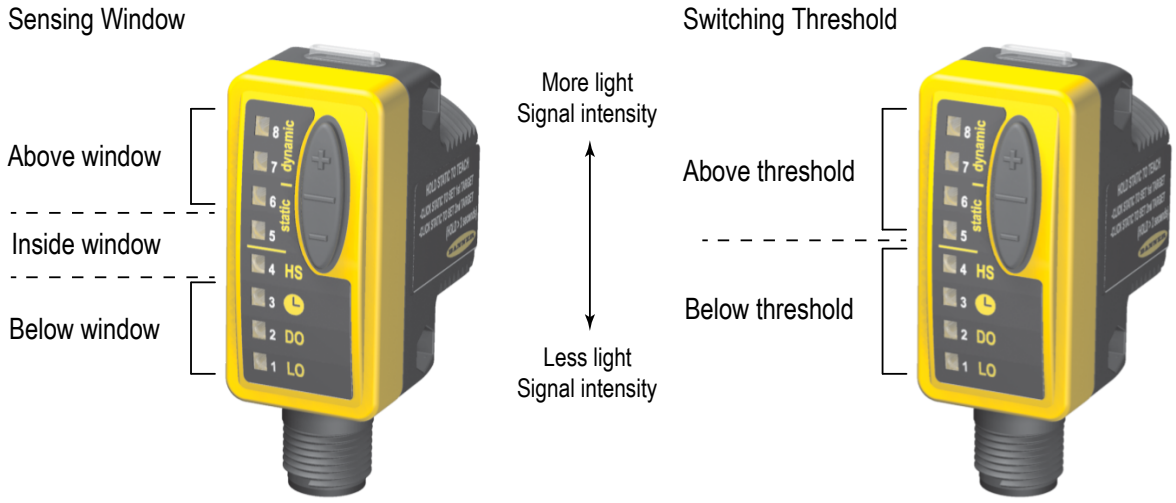

Specifications

Sensing Beam

660 nm visible red

Power

Supply voltage: 10 V DC to 30 V DC (10% maximum ripple) at 25 mA max current, exclusive of load

Supply protection circuitry: Protected against reverse polarity, over voltage, and transient voltages

Delay at power-up: 250 ms; outputs do not conduct during this time

Adjustments

Two push buttons and a remote wire

Easy push-button configuration; manually adjust (+/–) cutoff (push buttons only); Light Operate/Dark Operate and OFF-delay configuration options (push buttons only); Push-button lockout (from remote wire only)

Indicators

8-segment red bar graph: distance relative to cutoff point

Green LED: Power ON

Yellow LED: Output conducting

Connections

5-conductor 2 m (6.5 ft) PVC cable, 9 m (30 ft) PVC cable, or 5-pin integral M12 quick-disconnect fitting

Output Configuration

Bipolar: 1 current sourcing (PNP) and 1 current sinking (NPN)

Output Ratings

150 mA maximum load (derate ~ 1 mA/°C above 25 °C)

OFF-state leakage current: < 50 µA at 30 V DC

ON-state saturation voltage (NPN): < 200 mV at 10 mA; < 1 V at 150 mA

ON-state saturation voltage (PNP): < 1.25 V at 10 mA; < 2 V at 150 mA

Output Protection

Protected against output short-circuit, continuous overload, transient over-voltages, and false pulse on power up

Output Response Time

High-Speed Mode: 300 microseconds

Normal Mode: 1.8 ms

Repeatability

High-Speed Mode: 100 microseconds

Normal Mode: 150 microseconds

Construction

ABS plastic housing; acrylic lens cover

Rating

IP67

Operating Conditions

–10 °C to +55 °C (+14 °F to +131 °F)

95% at +55 °C maximum relative humidity (non-condensing)

Vibration and Mechanical Shock

Meets IEC 60068-2-6 requirements (Vibration: 10 Hz to 55 Hz, 0.5 mm amplitude, 5 minutes sweep, 30 minutes dwell)

Meets IEC 60068-2-27 requirements (Shock: 15G 11 ms duration, half sine wave)

© Banner Engineering Corp. All rights reserved.
www.bannerengineering.com

Certifications

IND. CONT. EQ.
E224071

Required Overcurrent Protection

WARNING: Electrical connections must be made by qualified personnel in accordance with local and national electrical codes and regulations.

Overcurrent protection is required to be provided by end product application per the supplied table.

Overcurrent protection may be provided with external fusing or via Current Limiting, Class 2 Power Supply.

Supply wiring leads < 24 AWG shall not be spliced.

For additional product support, go to www.bannerengineering.com.

Supply Wiring (AWG)	Required Overcurrent Protection (A)	Supply Wiring (AWG)	Required Overcurrent Protection (A)
20	5.0	26	1.0
22	3.0	28	0.8
24	2.0	30	0.5

FCC Part 15 Class A for Unintentional Radiators

This equipment has been tested and found to comply with the limits for a Class A digital device, pursuant to Part 15 of the FCC Rules. These limits are designed to provide reasonable protection against harmful interference when the equipment is operated in a commercial environment. This equipment generates, uses, and can radiate radio frequency energy and, if not installed and used in accordance with the instruction manual, may cause harmful interference to radio communications. Operation of this equipment in a residential area is likely to cause harmful interference in which case the user will be required to correct the interference at his own expense.

(Part 15.21) Any changes or modifications not expressly approved by the party responsible for compliance could void the user's authority to operate this equipment.

Industry Canada ICES-003(A)

This device complies with CAN ICES-3 (A)/NMB-3(A). Operation is subject to the following two conditions: 1) This device may not cause harmful interference; and 2) This device must accept any interference received, including interference that may cause undesired operation.

Cet appareil est conforme à la norme NMB-3(A). Le fonctionnement est soumis aux deux conditions suivantes : (1) ce dispositif ne peut pas occasionner d'interférences, et (2) il doit tolérer toute interférence, y compris celles susceptibles de provoquer un fonctionnement non souhaité du dispositif.

Performance Curves

Performance curves are based on the use of a 90% reflectance white test card.

Excess Gain Curve

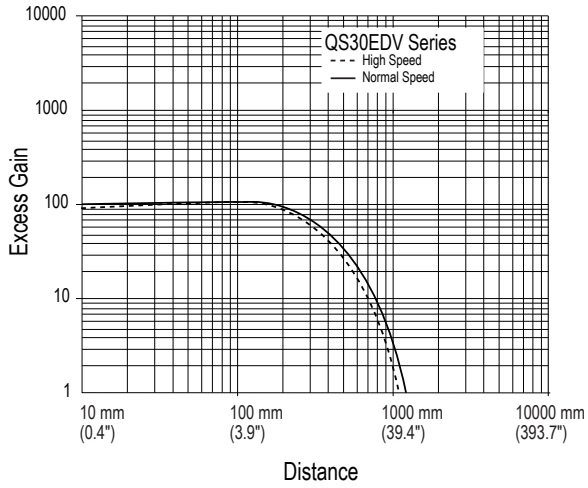

Beam Pattern

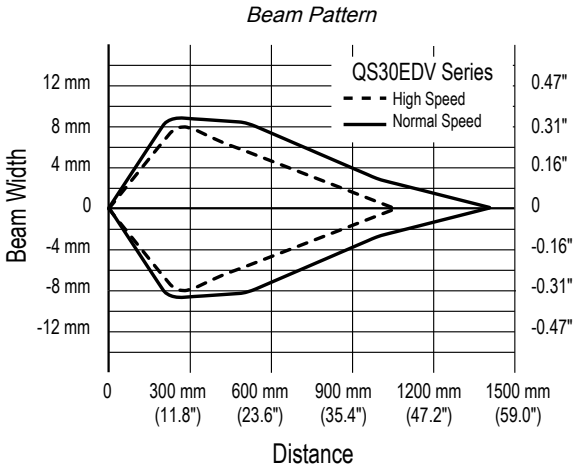

© Banner Engineering Corp. All rights reserved.
www.bannerengineering.com

Dimensions

Cabled models

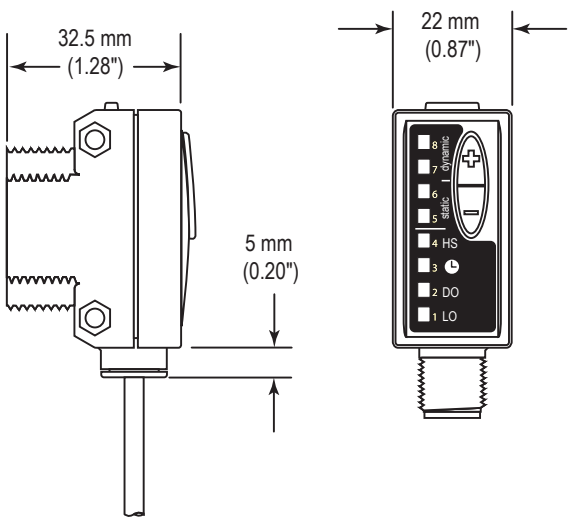

Quick disconnect models

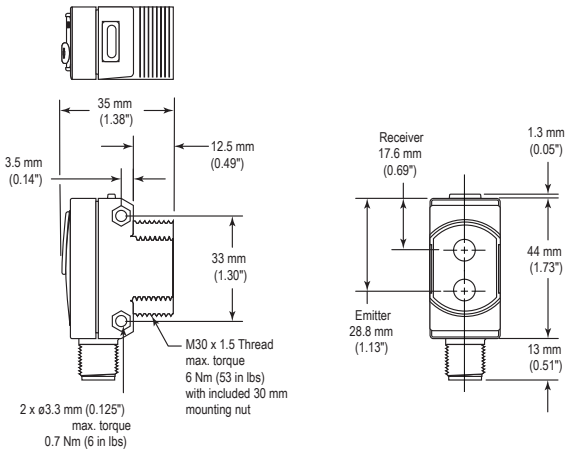

Hardware included: (10) M3 x 0.5 x 28 stainless steel machine screws, nuts and washers

© Banner Engineering Corp. All rights reserved.
www.bannerengineering.com

Chapter Contents

Chapter 2 Wiring

Cabled models

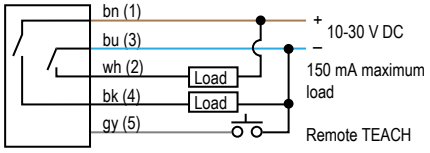

Quick disconnect models

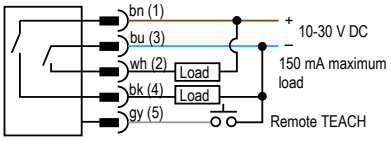

5-pin M12 male quick disconnect connector

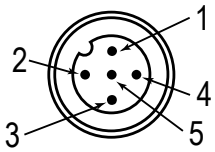

© Banner Engineering Corp. All rights reserved.
www.bannerengineering.com

Chapter Contents

Remote Configuration 8
Returning to Run Mode 8
Two-Point Static TEACH (Threshold) 9
Dynamic TEACH and Adaptive Thresholds 10
Single-Point Window Set 11
Single-Point Light Set 12
Single-Point Dark Set 13
Setup Mode 14
Manual Adjust 14
Enabling or Disabling the Push Button 15

Chapter 3 Sensor Configuration

Configure the sensor configuration by using the TEACH or Set options, plus Setup mode.

After TEACH or Set have defined the sensing parameters, use the Setup mode to enable the delay, to change the Light Operate/Dark Operate status, or to select the high-speed response option (HS).

After TEACH or Set have defined the sensing parameters, use the Setup mode to enable the delay or to change the Light Operate/Dark Operate status.

Use the Manual Adjust to fine-tune the thresholds. Two push buttons, Dynamic (+) and Static (-), or the remote wire, may be used to access and set the parameters.

Sensor configuration options include:

- Two-Point Static TEACH: a single switching threshold, determined by two taught conditions
- Dynamic (on-the-fly) TEACH: a single switching threshold, determined by multiple sampled conditions
- Window Set: a sensing window, centered on a single sensing condition
- Light Set and Dark Set: a single switching threshold, offset from a single sensing condition

In light operate (LO) mode, the output is ON when the target returns the same or more light to the sensor and OFF when the sensor detects less light than the configured/taught target. In dark operate (DO) mode, the output is ON when the target returns less light to the sensor than the configured target and OFF when the sensor detects more light than the configured/taught target.

In **diffuse** sensing modes, light operate means the output is on when the target is present and within the sensing range. Dark operate means the output is on when no target is detected.

Remote Configuration

The remote function can be used to configure the sensor remotely or to disable the push button for security. Connect the gray wire of the sensor to ground (0 V DC), with a remote programming switch connected between them. Pulse the remote line according to the diagrams in the configuration procedures. The length of the individual programming pulses is equal to the value T where: 0.04 seconds ≤ “T” ≤ 0.8 seconds

Returning to Run Mode

Configuration modes each may be exited either after the 60-second time-out or by exiting the process in one of the two following ways:

- In static TEACH or SET modes, press and hold the Static (-) button (or hold the remote line) for 2 seconds. The sensor returns to Run mode without saving any new settings.
- In SETUP mode, press and hold both the Static (-) and Dynamic (+) buttons (or hold the remote line) for 2 seconds. The sensor returns to Run mode and saves the current setting.

© Banner Engineering Corp. All rights reserved.
www.bannerengineering.com

Two-Point Static TEACH (Threshold)

- Sets a single switching threshold (switching point)
- Threshold position is adjustable using “+” and “-” buttons (Manual Adjust).
- Recommended for applications where two conditions can be presented by the user.

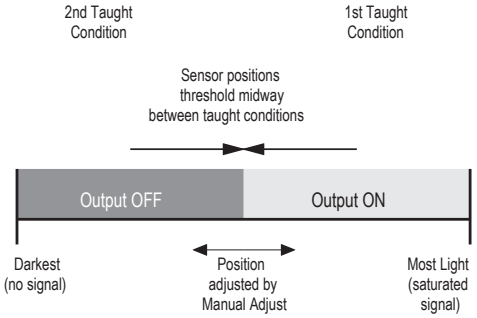

Two-Point TEACH is the traditional configuration method. The sensor locates a single switchpoint at the optimal location between the two taught conditions, with the Output ON condition on one side, and the Output OFF condition on the other.

The first condition taught is the ON condition. The Output ON and OFF conditions can be reversed by changing Light/Dark Operate status in *Setup Mode*.

Using Manual Adjust with Two-Point TEACH moves the switching threshold position. The lighted LED on the bar graph moves to exhibit the received signal, relative to the threshold.

Bargraph LED (Following TEACH)	Relative Signal Difference/Recommendation
6 to 8	Excellent: Very stable operation.
4 to 5	Good: Minor variables will not affect sensing reliability.
2 to 3	Low: Minor sensing variables may affect sensing reliability.
1	Unreliable: Consider an alternate sensing scheme.

For the button or the remote wire, a button click or pulse is: 0.04 seconds ≤ T ≤ 0.8 seconds.

1. Access TEACH Mode.

Method	Action	Result
Push Button	Press and hold Static (-) button for more than 2 seconds.	Power LED: OFF Output LED: ON Bar graph: #5 and 6 alternately flash
Remote Input	No action required; sensor is ready for 1st TEACH condition.	

2. TEACH the Output ON condition.

Method	Action	Result
Push Button	Present Output ON condition and click the Static (-) button.	Power LED: OFF Output LED: Flash, then OFF Bar graph: #5 and 6 alternately flash
Remote Input	Present Output ON condition and single-pulse the remote line.	

3. TEACH the Output OFF condition.

© Banner Engineering Corp. All rights reserved.
www.bannerengineering.com

Method	Action	Result
Push Button	Present Output OFF condition and click the Static (-) button.	TEACH Accepted Power LED: ON Bar graph: One LED flashes to show relative contrast (good signal difference shown; see table above) Sensor returns to RUN mode
Remote Input	Present Output OFF condition and single-pulse the remote line.	TEACH Unacceptable Power LED: OFF Bar graph: #1, 3 and 5, 7 alternately flash to show failure Sensor returns to “TEACH Output ON Condition”

Dynamic TEACH and Adaptive Thresholds

- Teach on-the-fly
- Sets a single switching threshold (switching point)
- Threshold position is adjustable using “+” and “-” buttons (Manual Adjust)
- Recommended for applications where a machine or process may not be stopped for teaching.

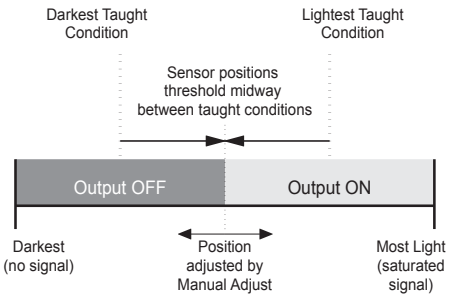

Dynamic TEACH is a variation of two-point TEACH. It programs the sensor during actual machine run conditions, taking multiple samples of the light and dark conditions and automatically setting the threshold at the optimum level.

Dynamic TEACH activates the sensor’s adaptive threshold system, which continuously tracks minimum and maximum signal levels, and automatically maintains centering of the threshold between the light and dark conditions. The adaptive threshold system remains in effect during Run mode. The adaptive routine saves to non-volatile memory at least once per hour.

When Dynamic TEACH mode is used, the output ON state (Light or Dark Operate) will remain as it was last programmed. To change the output ON state, use Setup Mode.

The sensing threshold may be adjusted (fine-tuned) whenever the sensor is in RUN mode by clicking the “+” and “-” buttons. However, when a manual adjustment is made, the adaptive threshold system is disabled (cancelled).

Bar Graph LED (Following TEACH)	Relative Signal Difference/Recommendation
6 to 8	Excellent: Very stable operation.
4 to 5	Good: Minor variables will not affect sensing reliability.
2 to 3	Low: Minor sensing variables may affect sensing reliability.
1	Unreliable: Consider an alternate sensing scheme.

1. Access Dynamic TEACH mode.

Method	Action	Result
Push Button	Press and hold the Dynamic (+) button for more than 2 seconds.	Power LED: OFF Output LED: OFF Bargraph: #7 and 8 alternately flash
Remote Input	Hold the remote line low (to ground) for more than 2 seconds.	

2. TEACH the sensing conditions.

© Banner Engineering Corp. All rights reserved.
www.bannerengineering.com

Method	Action	Result
Push Button	Continue to hold the button (+) and present the Output ON and OFF conditions.	Power LED: OFF Output LED: OFF Bargraph: #7 and 8 alternately flash
Remote Input	Continue to hold the remote line low (to ground) and present the Output ON and OFF conditions.	

3. Return to Run mode.

Method	Action	Result
Push Button	Release the push button (+).	TEACH Accepted Power LED: ON Bargraph: One LED flashes to show relative contrast (good signal difference shown; see table above) Sensor returns to RUN mode with new settings
Remote Input	Release the remote line/switch.	TEACH Unacceptable Power LED: OFF Bargraph: #1, 3 and 5, 7 alternately flash to show failure Sensor returns to RUN mode without changing settings

Single-Point Window Set

- Sets a single ON condition that extends 12.5% above and below the taught condition.
- All other conditions (lighter or darker) result in OFF output
- Sensing window size (sensitivity) is adjustable using the “+” and “-” buttons (Manual Adjust)
- Recommended for applications where the target to be sensed may not always appear in the same place, or when other signals may appear.

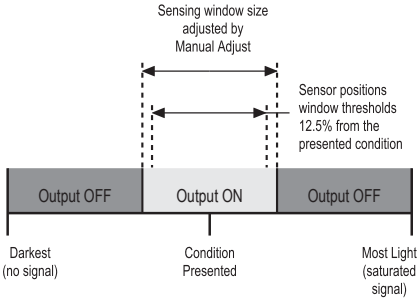

Single-Point Set designates a sensing window, by setting two switching thresholds at 12.5% above and below the presented condition. The Output ON condition is inside the window, and the Output OFF conditions are outside the window when Light Operate is selected. Output ON and OFF conditions can be reversed by changing Light/Dark Operate status in Setup mode.

For the button or the remote wire, a button click or pulse is: 0.04 seconds ≤ T ≤ 0.8 seconds.

Using Manual Adjust with Single-Point Window Set expands or contracts the size of the window. The lighted LEDs on the light bar separate to a greater or lesser extent to exhibit the relative sensing window size.

1. Access Set Mode.

Method	Action	Result
Push Button	Press and hold the Static (-) button for more than 2 seconds.	Power LED: OFF Output LED: ON (Push Button) Output LED: OFF (Remote) Bar graph: #5 and 6 alternately flash
Remote Input	Single-pulse the remote line.	

2. Set the sensing condition.

© Banner Engineering Corp. All rights reserved.
www.bannerengineering.com

Method	Action	Result
Push Button	Present the sensing condition and double-click the Static (-) button.	**Threshold Conditions Accepted** Power LED: ON Bar graph: 2 indicators flash together to show the threshold conditions are accepted Sensor returns to RUN mode with new settings **Threshold Conditions Unacceptable** Power LED: OFF Bar graph: #1, 3 and 5, 7 alternately flash to show failure Sensor returns to “SET Sensing Condition”
Remote Input	Present the sensing condition and double-pulse the remote line.	

Single-Point Light Set

- Sets a threshold 12.5% below the taught condition.
- Any condition darker than the threshold condition causes the output to change state.
- Threshold position is adjustable using the “+” and “-” buttons (Manual Adjust).
- Recommended for applications where only one condition is known, for example a stable light background with varying darker targets.

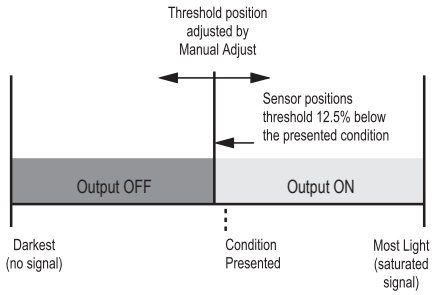

A single sensing condition is presented, and the sensor positions a threshold 12.5% below the presented condition. When a condition darker than the threshold is sensed, the output either turns ON or OFF, depending on the Light/Dark Operate setting (see "Setup Mode" on page 14).

For the button or the remote wire, a button click or pulse is: 0.04 seconds ≤ T ≤ 0.8 seconds.

In Light Operate mode, Light Set teaches the Output ON condition. In Dark Operate mode, Light Set teaches the Output OFF condition.

1. Access Set mode.

Method	Action	Result
Push Button	Press and hold the Static (-) button for more than 2 seconds.	Power LED: OFF Output LED: ON (Push Button) Output LED: OFF (Remote) Bar graph: #5 and 6 alternately flash
Remote Input	Single-pulse the remote line.	

2. Set the sensing condition.

Method	Action	Result
Push Button	Present the sensing condition and click the Static (-) button four times.	**Threshold Condition Accepted** Power LED: ON Bar graph: Indicators #5–8 flash together to show that the threshold condition is accepted Sensor returns to RUN mode with new settings **Threshold Condition Unacceptable** Power LED: OFF Bar graph: #1, 3 and 5, 7 alternately flash to show failure Sensor returns to “SET Sensing Condition”
Remote Input	Present the sensing condition and four-pulse the remote line.	

© Banner Engineering Corp. All rights reserved.
www.bannerengineering.com

Single-Point Dark Set

- Sets a threshold 12.5% above the taught condition.
- Any condition lighter than the threshold condition causes the output to change state.
- Threshold position is adjustable using the “+” and “-” buttons (Manual Adjust).
- Recommended for applications where only one condition is known, for example a stable dark background with varying lighter targets.

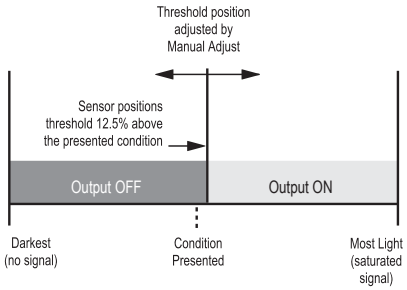

A single sensing condition is presented, and the sensor positions a threshold 12.5% above the taught condition. When a condition lighter than the threshold is sensed, the output either turns ON or OFF, depending on the Light/Dark Operate setting (see "Setup Mode" on page 14).

For the button or the remote wire, a button click or pulse is: 0.04 seconds ≤ T ≤ 0.8 seconds.

In Light Operate mode, Dark Set teaches the Output OFF condition. In Dark Operate mode, Dark Set teaches the Output ON condition.

1. Access Set mode.

Method	Action	Result
Push Button	Press and hold the Static (-) button for more than 2 seconds.	Power LED: OFF Output LED: ON (Push Button) Output LED: OFF (Remote) Bar graph: #5 and 6 alternately flash
Remote Input	Single-pulse the remote line.	

2. Set the sensing condition.

Method	Action	Result
Push Button	Present the sensing condition and click the Static (-) button five times.	**Threshold Condition Accepted** Power LED: ON Bar graph: Indicators #1–4 flash together to show that the threshold condition is accepted Sensor returns to Run mode with new settings **Threshold Condition Unacceptable** Power LED: OFF Bar graph: #1, 3 and 5, 7 alternately flash to show failure Sensor returns to “Set Sensing Condition”
Remote Input	Present the sensing condition and five-pulse the remote line.	

© Banner Engineering Corp. All rights reserved.
www.bannerengineering.com

Setup Mode

Setup mode is used to change sensor output response for:

- Light or Dark operate
- 30-millisecond pulse stretcher (OFF delay), if required.
- 300 µs high-speed response

If Setup mode programming is interrupted and remains inactive for 60 seconds, the sensor returns to Run mode with the most recent settings (e.g., exits and saves current selection). Setup mode operates in the “background” while the outputs are active; changes are updated instantly.



For the button or the remote wire, a button click or pulse is: 0.04 seconds ≤ T ≤ 0.8 seconds.

1. Access Setup mode.

Method	Action	Result
Push Button	Press and hold both buttons (+ and -) for more than 2 seconds.	Green Power LED turns OFF Output LED remains active Status indicators (bar graph #1–4) flash current setup
Remote Input	Double-pulse the remote line.	

2. Select the sensing conditions.

Method	Action	Result
Push Button	Click either button (+ or -) until the LEDs show the desired settings.	Sensor rotates through eight setting combinations, in the following order: 1. Normal Speed - No Delay - LO* 2. Normal Speed - No Delay - DO 3. Normal Speed - Delay - LO 4. Normal Speed - Delay - DO 5. High Speed - No Delay - LO 6. High Speed - No Delay - DO 7. High Speed - Delay - LO 8. High Speed - Delay - DO * Factory default setting
Remote Input	Pulse the remote line until the LEDs show the desired settings. NOTE: Double-pulsing the remote line causes the setting to “back up” one step.	

3. Return to Run mode.

Method	Action	Result
Push Button	Press and hold both buttons (+ and -) for more than 2 seconds.	Green Power LED turns ON Sensor returns to RUN mode with new settings
Remote Input	Hold the remote line low for more than 2 seconds.	

Manual Adjust

Manual Adjust is used during Run mode and is accomplished using the push buttons only. Its behavior depends on whether a switching threshold or a sensing window is used.

Switching Threshold:

- Fine-tunes sensing sensitivity
- Press “+” to increase; press “-” to decrease

Sensing Window:

© Banner Engineering Corp. All rights reserved.
www.bannerengineering.com

- Adjusts sensing window size (tolerance) for the single-point target condition
- Press “+” to increase; press “-” to decrease

The duration of each button click or remote input pulse is defined as T, where T is: 0.04 s < T < 0.8 s.

Method	Action		Result
Push Button	Click "+" to increase, or click "-" to decrease.		Display briefly flashes the threshold setpoint value as it is being changed   **OR** Display flashes**"inc"** or "**dEc**" as the window size is adjusted  or 
Remote Input	Not available with remote programming.		n/a

Enabling or Disabling the Push Button

In addition to its programming function, the remote line may be used to disable the push buttons for security. Disabling the push buttons prevents undesired tampering with the sensor configuration settings.

1. Connect the sensor’s gray wire.
2. Four-pulse the remote line to enable or disable the push button.

   The sensor toggles between enable and disable settings and returns to RUN mode.

© Banner Engineering Corp. All rights reserved.
www.bannerengineering.com

Chapter Contents

Chapter 4 Accessories

5-pin Single-Ended M12 Female Cordsets				
Model	**Length**	**Dimensions (mm)**	**Pinout (Female)**	
BC-M12F5-22-1	1 m (3.28 ft)	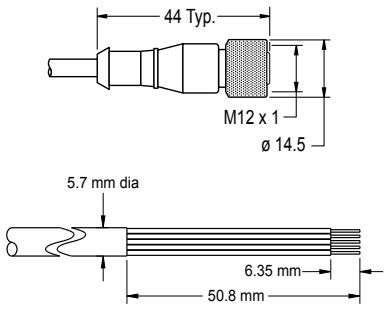	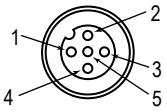	1 = Brown 2 = White 3 = Blue 4 = Black 5 = Gray
BC-M12F5-22-2	2 m (6.56 ft)			
BC-M12F5-22-5	5 m (16.4 ft)			
BC-M12F5-22-8	8 m (26.25 ft)			
BC-M12F5-22-10	10 m (30.81 ft)			
BC-M12F5-22-15	15 m (49.2 ft)			

5-pin Single-Ended M12 Female Right-Angle Cordsets				
Model	**Length**	**Dimensions (mm)**	**Pinout (Female)**	
BC-M12F5A-22-1	1 m (3.28 ft)	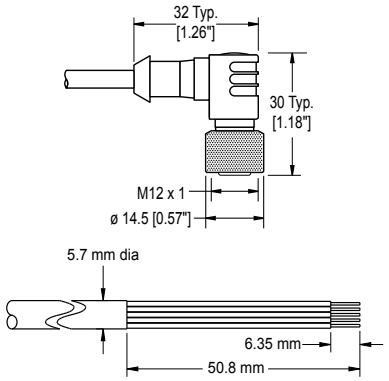	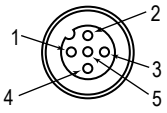	1 = Brown 2 = White 3 = Blue 4 = Black 5 = Gray
BC-M12F5A-22-2	2 m (6.56 ft)			
BC-M12F5A-22-5	5 m (16.4 ft)			
BC-M12F5A-22-8	8 m (26.25 ft)			
BC-M12F5A-22-10	10 m (30.81 ft)			
BC-M12F5A-22-15	15 m (49.2 ft)			

SMBQS30L

- Right-angle bracket for cable sensor models
- Clearance for M4 (#8) hardware
- ± 12° tilt adjustment
- 14-gauge stainless steel

Hole center spacing: A to B=35.0
Hole size: A=ø 4.3, B=ø 4.25×16.3



SMBQS30LT

- Tall right-angle bracket for QD models
- ± 8° tilt adjustment
- 14-gauge stainless steel

Hole center spacing: A to B=35.0
Hole size: A=ø 4.3, B=ø 4.25×16.3



© Banner Engineering Corp. All rights reserved.
www.bannerengineering.com

SMBQS30Y

- Heavy-duty die-cast bracket
- M18 vertical mount option
- ± 8° tilt adjustment with cabled units
- Includes nuts and lock washer

Hole size: A=ø 15.3



SMBQS30YL

- Heavy-duty die-cast bracket designed for industrial protection
- M18 vertical mount option
- Replaceable window
- Includes nuts and lock washer

Hole size: A=ø 15.3

Other compatible mounting brackets include: SMB30MM, SMB30SC, and SMB30A

© Banner Engineering Corp. All rights reserved.
www.bannerengineering.com

Chapter Contents

Repairs 18
Contact Us 18
Banner Engineering Corp Limited Warranty 18

Chapter 5 Product Support and Maintenance

Repairs

Contact Banner Engineering for troubleshooting of this device. **Do not attempt any repairs to this Banner device; it contains no field-replaceable parts or components.** If the device, device part, or device component is determined to be defective by a Banner Applications Engineer, they will advise you of Banner's RMA (Return Merchandise Authorization) procedure.

> **IMPORTANT:** If instructed to return the device, pack it with care. Damage that occurs in return shipping is not covered by warranty.

Contact Us

Banner Engineering Corp. | 9714 Tenth Avenue North | Plymouth, MN 55441, USA | Phone: + 1 888 373 6767

For worldwide locations and local representatives, visit www.bannerengineering.com.

Banner Engineering Corp Limited Warranty

Banner Engineering Corp. warrants its products to be free from defects in material and workmanship for one year following the date of shipment. Banner Engineering Corp. will repair or replace, free of charge, any product of its manufacture which, at the time it is returned to the factory, is found to have been defective during the warranty period. This warranty does not cover damage or liability for misuse, abuse, or the improper application or installation of the Banner product.

THIS LIMITED WARRANTY IS EXCLUSIVE AND IN LIEU OF ALL OTHER WARRANTIES WHETHER EXPRESS OR IMPLIED (INCLUDING, WITHOUT LIMITATION, ANY WARRANTY OF MERCHANTABILITY OR FITNESS FOR A PARTICULAR PURPOSE), AND WHETHER ARISING UNDER COURSE OF PERFORMANCE, COURSE OF DEALING OR TRADE USAGE.

This Warranty is exclusive and limited to repair or, at the discretion of Banner Engineering Corp., replacement. **IN NO EVENT SHALL BANNER ENGINEERING CORP. BE LIABLE TO BUYER OR ANY OTHER PERSON OR ENTITY FOR ANY EXTRA COSTS, EXPENSES, LOSSES, LOSS OF PROFITS, OR ANY INCIDENTAL, CONSEQUENTIAL OR SPECIAL DAMAGES RESULTING FROM ANY PRODUCT DEFECT OR FROM THE USE OR INABILITY TO USE THE PRODUCT, WHETHER ARISING IN CONTRACT OR WARRANTY, STATUTE, TORT, STRICT LIABILITY, NEGLIGENCE, OR OTHERWISE.**

Banner Engineering Corp. reserves the right to change, modify or improve the design of the product without assuming any obligations or liabilities relating to any product previously manufactured by Banner Engineering Corp. Any misuse, abuse, or improper application or installation of this product or use of the product for personal protection applications when the product is identified as not intended for such purposes will void the product warranty. Any modifications to this product without prior express approval by Banner Engineering Corp will void the product warranties. All specifications published in this document are subject to change; Banner reserves the right to modify product specifications or update documentation at any time. Specifications and product information in English supersede that which is provided in any other language. For the most recent version of any documentation, refer to: www.bannerengineering.com.

For patent information, see www.bannerengineering.com/patents.

© Banner Engineering Corp. All rights reserved.
www.bannerengineering.com

LinkedIn

X (formerly Twitter)

Facebook



© 2025. All rights reserved.
www.bannerengineering.com