Datasheet

Miniature self-contained DC photoelectric sensor



- Self-contained DC sensor in a miniature right-angle housing; only 11 mm (0.43 in) thick
- Epoxy-encapsulated circuitry; IP54 (NEMA5) construction; hermetically-sealed optics
- 1.8 m (70 in) opposed range or 0.5 m (20 in) diffuse range
- Diffuse models have sensitivity adjustment
- Choose models for light operate (LO) or dark operate (DO); choose either NPN (sinking) or PNP (sourcing) output models

WARNING:

- **Do not use this device for personnel protection**
- Using this device for personnel protection could result in serious injury or death.
- This device does not include the self-checking redundant circuitry necessary to allow its use in personnel safety applications. A device failure or malfunction can cause either an energized (on) or de-energized (off) output condition.

Models

NOTE: Models with a quick disconnect require a mating cordset.

Q10 Opposed Mode Emitter (E) and Receiver (R)

Models	Range	Cable	Supply Voltage	NPN/ PNP	LO/ DO
Q106E	1.8 m (70 in)	2 m (6.5 in)	10 V DC to 30 V DC	-	-
Q106EQ		3-Pin integral quick-disconnect connector			
Q10AN6R		2 m (6.5 in)		NPN	LO
Q10AN6RQ		3-Pin integral quick-disconnect connector			
Q10RN6R		2 m (6.5 in)			DO
Q10RN6RQ		3-Pin integral quick-disconnect connector			
Q10AP6R		2 m (6.5 in)		PNP	LO
Q10AP6RQ		3-Pin integral quick-disconnect connector			
Q10RP6R		2 m (6.5 in)			DO
Q10RP6RQ		3-Pin integral quick-disconnect connector			

Q10 Diffuse Mode

Models	Range	Cable	Supply Voltage	NPN/ PNP	LO/ DO
Q10AN6D	0.5 m (20 in)	2 m (6.5 in)	10 V DC to 30 V DC	NPN	LO
Q10AN6DQ		3-Pin integral quick-disconnect connector			
Q10RN6D		2 m (6.5 in)			DO
Q10RN6DQ		3-Pin integral quick-disconnect connector			
Q10AP6D		2 m (6.5 in)		PNP	LO
Q10AP6DQ		3-Pin integral quick-disconnect connector			
Q10RP6D		2 m (6.5 in)			DO
Q10RP6DQ		3-Pin integral quick-disconnect connector			

© Banner Engineering Corp.

ПРОМЭЛЕКТРОНИКА/ sales@prom-elec.com

Wiring Diagrams

Emitters

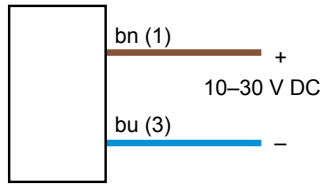

NPN Receivers

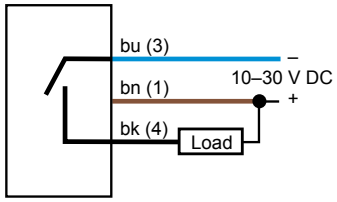

PNP Receivers

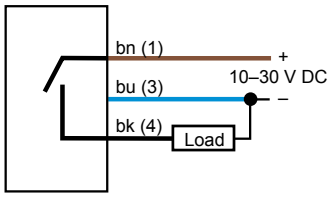

Key
1 = Brown
3 = Blue
4 = Black

Quick disconnect wiring diagrams are functionally identical.

Mounting Specifications

Flat Mounting

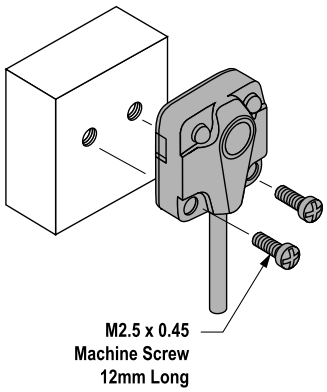

Stand-Off Mounting

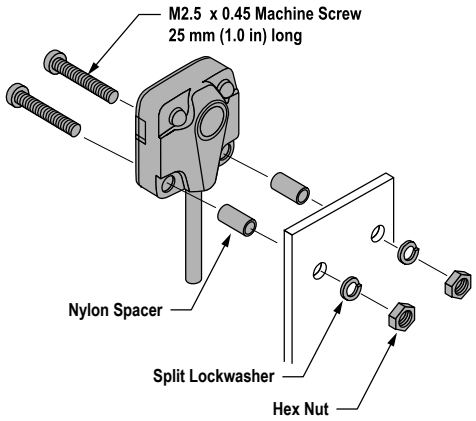

Specifications

Sensing Beam
Infrared, 880 nm

Supply Voltage and Current
10 V dc to 30 V dc (10% maximum ripple)
Emitter or receiver: 15 mA
Diffuse models: 20 mA (exclusive of load)

Supply Protection Circuitry
Protected against reverse polarity

Output Configuration
SPST solid-state dc switch
Choose NPN (current sinking) or PNP (current sourcing) models
Choose light operate or dark operate models

Output Rating
150 mA maximum
Off-state leakage current: < 10 microamps at 30 V dc
On-state saturation voltage: < 0.5 V at 10 mA dc; < 1.5 V at 150 mA dc

Output Protection Circuitry
Protected against output short-circuit, continuous overload, and false pulse on power-up
Overload trip point ≥ 220 mA, typical, at 20 °C

Output Response Time
Opposed mode: 8 ms On, 4 ms Off
Diffuse mode: 3 ms On and Off

Repeatability
Opposed mode: 1.0 ms
Diffuse mode: 0.75 ms

Adjustments
Diffuse models (only); single-turn, top-mounted sensitivity control for adjustment of system gain (turn clockwise to increase)

Indicators
Opposed mode receivers and diffuse mode sensors have two LEDs: Green and Amber
- Green on = power to the sensor is On
- Green flashing = output is overloaded
- Amber on = light is sensed
- Amber flashing = marginal excess gain (1 to 1.5×) in light condition

Emitters have one Green LED; Green on = power to the sensor is On

Construction
Housings are black ABS; Rated UL 94V0
Lenses are hermetically-sealed glass; lens covers are clear acrylic
Circuitry is epoxy-encapsulated and completely sealed
Stainless steel M2.5 mounting hardware is included

Connections
2 m (6.5 ft) attached cable, or 3-pin pico-style quick-disconnect fitting
Cables for QD models are purchased separately

© Banner Engineering Corp. All rights reserved.

Environmental Rating

IP54 (NEMA 5)

Operating Conditions

–40 °C to +70 °C (–40 °F to +158 °F)

90% at +50 °C maximum relative humidity (non-condensing)

Certifications

Banner Engineering BV
Park Lane, Culliganlaan 2F bus 3
1831 Diegem, BELGIUM

Turck Banner LTD Blenheim House
Blenheim Court
Wickford, Essex SS11 8YT
GREAT BRITAIN

Dimensions

Opposed Mode Models

Cabled Models

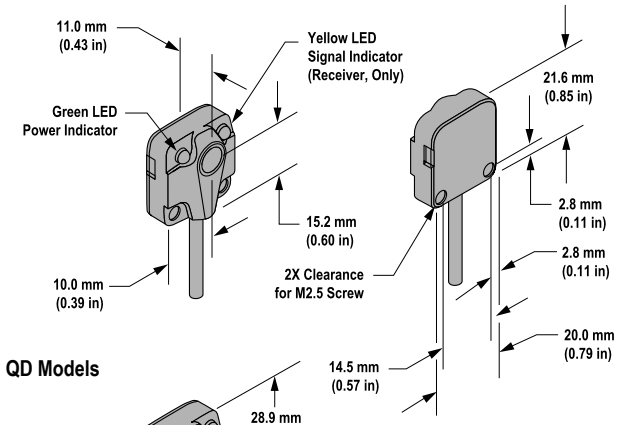

QD Models

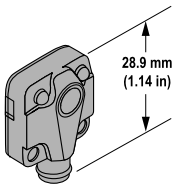

Diffuse Mode Models

Cabled Models

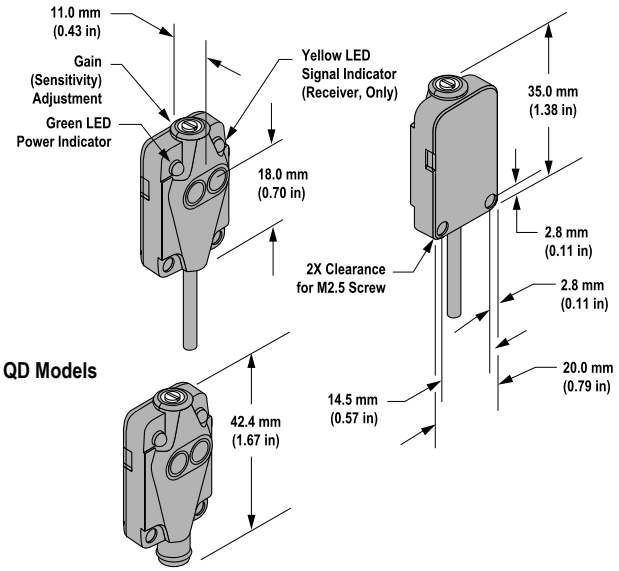

QD Models

Performance Curves

Opposed Mode

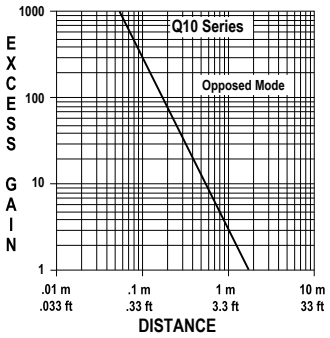

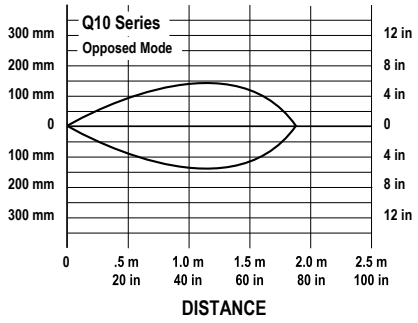

Effective Beam: 5 mm

Diffuse Mode

Performance based on a 90% reflectance white test card.

© Banner Engineering Corp. All rights reserved.

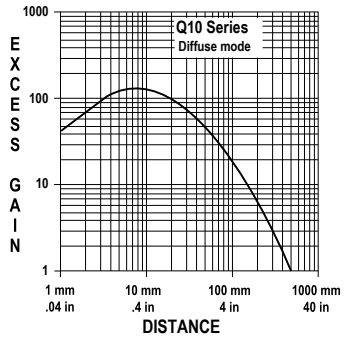

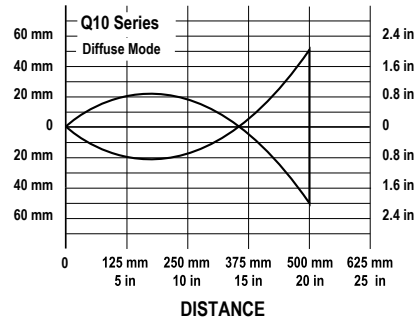

Cordsets

3-pin Snap/M8 Cordsets—Single Ended				
Model	**Length**	**Style**	**Dimensions**	**Pinout (Female)**
PKG3Z-2	2 m (6.56 ft)	Straight	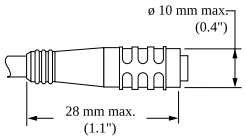	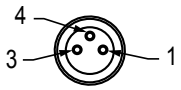 1 = Brown 3 = Blue 4 = Black
PKW3-2	2 m (6.56 ft)	Right-Angle	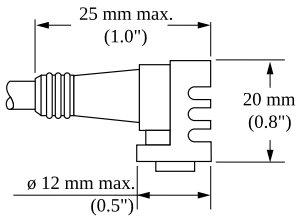	

Banner Engineering Corp. Limited Warranty

Banner Engineering Corp. warrants its products to be free from defects in material and workmanship for one year following the date of shipment. Banner Engineering Corp. will repair or replace, free of charge, any product of its manufacture which, at the time it is returned to the factory, is found to have been defective during the warranty period. This warranty does not cover damage or liability for misuse, abuse, or the improper application or installation of the Banner product.

THIS LIMITED WARRANTY IS EXCLUSIVE AND IN LIEU OF ALL OTHER WARRANTIES WHETHER EXPRESS OR IMPLIED (INCLUDING, WITHOUT LIMITATION, ANY WARRANTY OF MERCHANTABILITY OR FITNESS FOR A PARTICULAR PURPOSE), AND WHETHER ARISING UNDER COURSE OF PERFORMANCE, COURSE OF DEALING OR TRADE USAGE.

This Warranty is exclusive and limited to repair or, at the discretion of Banner Engineering Corp., replacement. **IN NO EVENT SHALL BANNER ENGINEERING CORP. BE LIABLE TO BUYER OR ANY OTHER PERSON OR ENTITY FOR ANY EXTRA COSTS, EXPENSES, LOSSES, LOSS OF PROFITS, OR ANY INCIDENTAL, CONSEQUENTIAL OR SPECIAL DAMAGES RESULTING FROM ANY PRODUCT DEFECT OR FROM THE USE OR INABILITY TO USE THE PRODUCT, WHETHER ARISING IN CONTRACT OR WARRANTY, STATUTE, TORT, STRICT LIABILITY, NEGLIGENCE, OR OTHERWISE.**

Banner Engineering Corp. reserves the right to change, modify or improve the design of the product without assuming any obligations or liabilities relating to any product previously manufactured by Banner Engineering Corp. Any misuse, abuse, or improper application or installation of this product or use of the product for personal protection applications when the product is identified as not intended for such purposes will void the product warranty. Any modifications to this product without prior express approval by Banner Engineering Corp will void the product warranties. All specifications published in this document are subject to change; Banner reserves the right to modify product specifications or update documentation at any time. Specifications and product information in English supersede that which is provided in any other language. For the most recent version of any documentation, refer to: www.bannerengineering.com.

For patent information, see www.bannerengineering.com/patents.

Document title: Q10 Series Sensors Datasheet
Part number: 45725
Revision: D
Original Instructions
© Banner Engineering Corp. All rights reserved.

45725

© Banner Engineering Corp. All rights reserved.