4-pin A-Code Single-Ended Z-Body M12 18 AWG TPE Cordsets

Features

- 4-pin A-code single-ended M12 female or male to flying leads
- Straight and right-angle models with keyway indicator
- ITC/PLTC cable
- TPE jacket, unshielded
- Sunlight and oil resistant
- Weld spatter resistant

Models

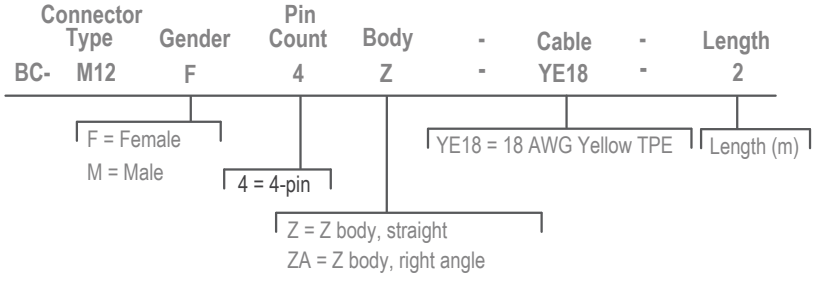

4-pin A-Code M12 Female Z-Body

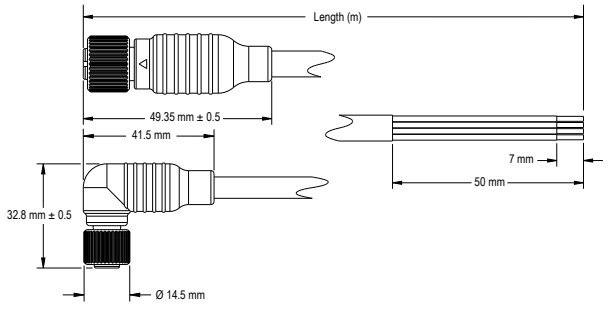

4-pin A-Code M12 Female

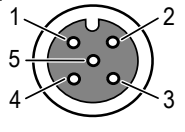

1. Brown
2. White
3. Blue
4. Black
5. Not used

4-pin A-Code M12 Male Z-Body

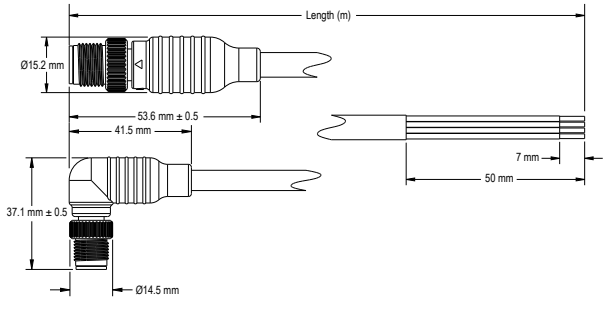

4-pin A-Code M12 Male

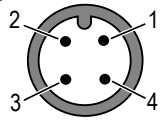

1. Brown
2. White
3. Blue
4. Black

Specifications

Current Rating
4 A

Voltage Rating
30 V

Coding
A

Connections
4-pin M12 female or male quick disconnect, depending on the model ordered

Original Instructions
09-Mar-26

© Banner Engineering Corp. All rights reserved.
www.bannerengineering.com

254682
p/n: 254682 Rev. B

ПРОМЭЛЕКТРОНИКА/ sales@prom-elec.com

Construction

- Coupling nut material: Nickel-plated brass
- Contact carrier: Black TPU
- Connector body: Black TPU
- Jacket material: Yellow TPE

Operating Conditions

- Operating temperature: –40 °C to +70 °C (–40 °F to +158 °F)
- Storage temperature: –40 °C to +70 °C (–40 °F to +158 °F)
- 90% at +50 °C maximum relative humidity (non-condensing)

Cable

- 18 AWG
- Outer diameter: 6.7 mm
- Static bend radius: 5× the outside diameter
- Dynamic bend radius: 10× the outside diameter
- Jacket material: Yellow TPE
- ITC (Instrumentation Tray Cable): 105 °C, 150 V, 5 A or less
- PLTC (Power-Limited Tray Cable): 105 °C, 300 V
- Sunlight resistant
- Oil Res I and II
- CMX-OUTDOOR-CMG
- FT4 flame rating

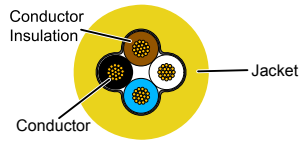

Banner Engineering Corp Limited Warranty

Banner Engineering Corp. warrants its products to be free from defects in material and workmanship for one year following the date of shipment. Banner Engineering Corp. will repair or replace, free of charge, any product of its manufacture which, at the time it is returned to the factory, is found to have been defective during the warranty period. This warranty does not cover damage or liability for misuse, abuse, or the improper application or installation of the Banner product.

THIS LIMITED WARRANTY IS EXCLUSIVE AND IN LIEU OF ALL OTHER WARRANTIES WHETHER EXPRESS OR IMPLIED (INCLUDING, WITHOUT LIMITATION, ANY WARRANTY OF MERCHANTABILITY OR FITNESS FOR A PARTICULAR PURPOSE), AND WHETHER ARISING UNDER COURSE OF PERFORMANCE, COURSE OF DEALING OR TRADE USAGE.

This Warranty is exclusive and limited to repair or, at the discretion of Banner Engineering Corp., replacement. **IN NO EVENT SHALL BANNER ENGINEERING CORP. BE LIABLE TO BUYER OR ANY OTHER PERSON OR ENTITY FOR ANY EXTRA COSTS, EXPENSES, LOSSES, LOSS OF PROFITS, OR ANY INCIDENTAL, CONSEQUENTIAL OR SPECIAL DAMAGES RESULTING FROM ANY PRODUCT DEFECT OR FROM THE USE OR INABILITY TO USE THE PRODUCT, WHETHER ARISING IN CONTRACT OR WARRANTY, STATUTE, TORT, STRICT LIABILITY, NEGLIGENCE, OR OTHERWISE.**

Banner Engineering Corp. reserves the right to change, modify or improve the design of the product without assuming any obligations or liabilities relating to any product previously manufactured by Banner Engineering Corp. Any misuse, abuse, or improper application or installation of this product or use of the product for personal protection applications when the product is identified as not intended for such purposes will void the product warranty. Any modifications to this product without prior express approval by Banner Engineering Corp will void the product warranties. All specifications published in this document are subject to change; Banner reserves the right to modify product specifications or update documentation at any time. Specifications and product information in English supersede that which is provided in any other language. For the most recent version of any documentation, refer to: www.bannerengineering.com.

For patent information, see www.bannerengineering.com/patents.

© Banner Engineering Corp. All rights reserved.
www.bannerengineering.com