EZ-SCREEN LP Rotational Side Bracket

Supplement

Guide to bracket mounting

Use the screwdriver provided with the EZ-SCREEN LP to access the DIP switches. Use a 3 mm hex driver to tighten the mounting bracket and achieve the listed torque specifications.

1 Adjust clamp screw to loosen or tighten clamp.

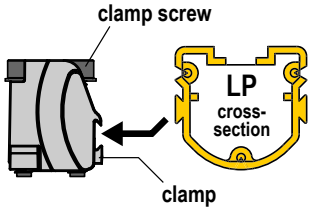

2 Slide inner bracket assembly into outer bracket groove.

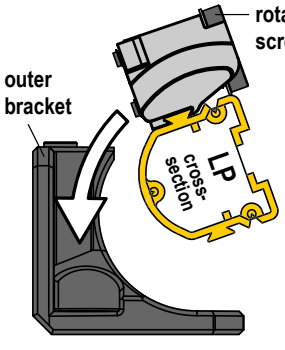

(Recommended: mount outer bracket to wall before Step 2 process)

3 With the light screen aligned, tighten rotation position screw to complete installation.

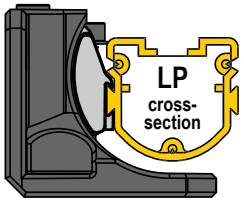

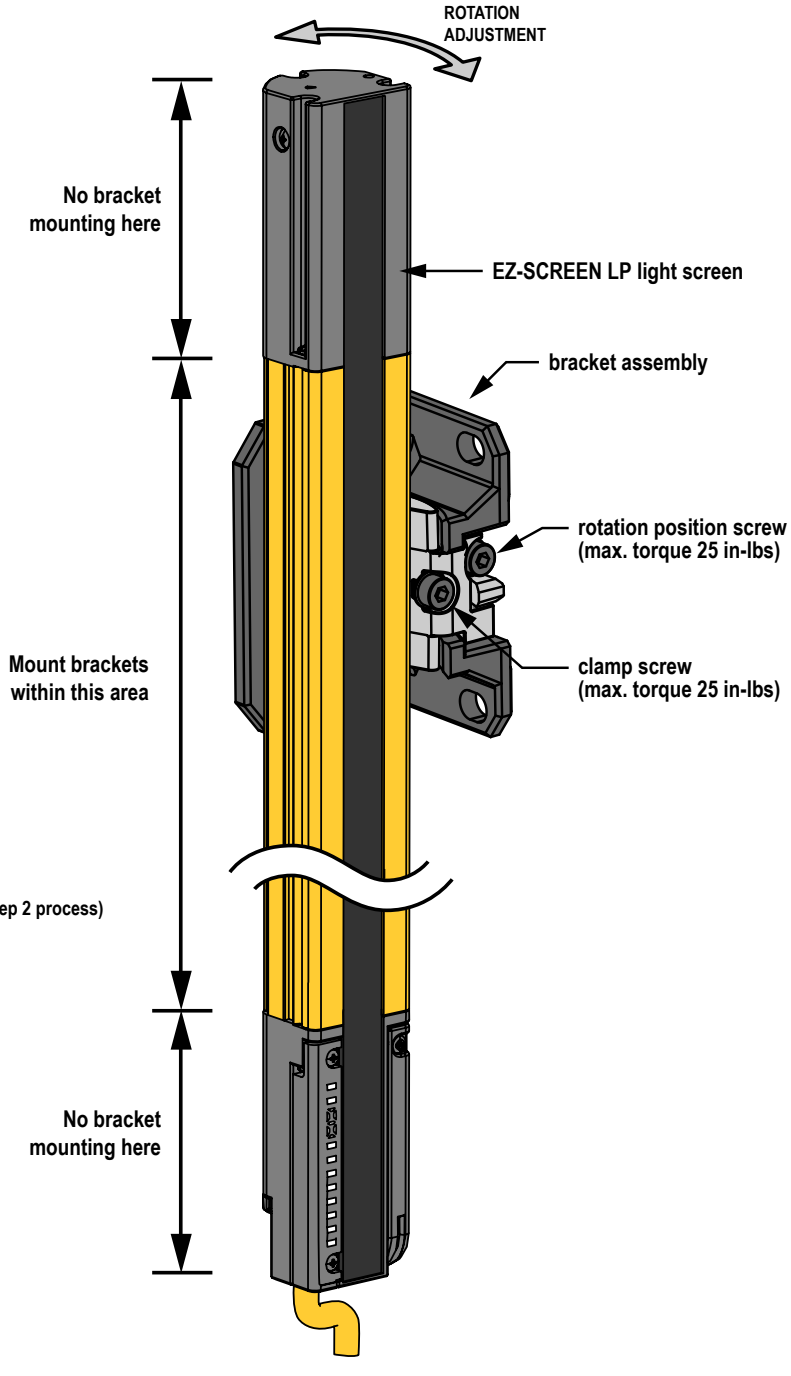

Original Document
187152 Rev. C

15 August 2016

187152

ПРОМЭЛЕКТРОНИКА/ sales@prom-elec.com