3-pin and 4-pin M8 Field Wireables

Features

- M8 field wireables
- Screw terminal for a secure connection
- Straight and right-angle connector options

Models

M8 Field-Wireable Connectors

Model	Style	Dimensions (4-pin shown; 3-pin functionally identical)	Gender	Pinout
BFW-M8F3-4X	3-Pin Straight	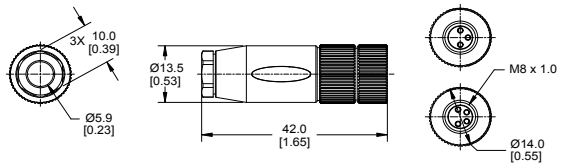	Female	
BFW-M8F4-4X	4-Pin Straight			
BFW-M8M3-4X	3-Pin Straight	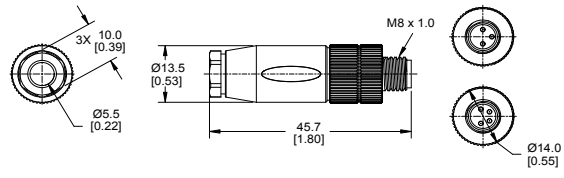	Male	
BFW-M8M4-4X	4-Pin Straight			
BFW-M8F3A-4X	3-Pin Right-Angle	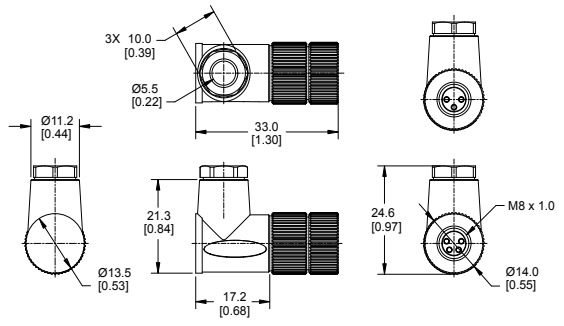	Female	
BFW-M8F4A-4X	4-Pin Right-Angle			
BFW-M8M3A-4X	3-Pin Right-Angle	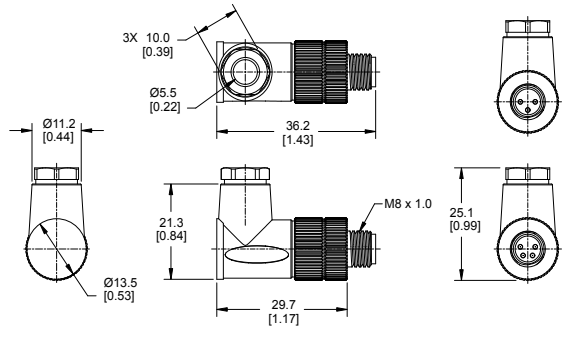	Male	
BFW-M8M4A-4X	4-Pin Right-Angle			

Specifications

Current Rating
3 A

Voltage Rating
30 V AC/DC

AWG
24[1]

[1] Maximum gauge recommended

Cable Outside Diameter
3.5 mm to 5 mm

Construction
Coupling nut material: Nickel-plated brass
Connector body: Glass-filled polyamide
Connector contacts: Gold-plated brass
Connector insert: Thermoplastic polyurethane; polyamide
O-Ring seal: FKM rubber

Resistance
Insulation resistance: ≥ 100 MΩ
Contact resistance: ≤ 5 mΩ

Operating Conditions
–25 °C to +90 °C (–13 °F to +194 °F)

Environmental Rating
IP67[2]

[2] Rating applicable when the properly sized cable is used and the connector is fully mated

Original Instructions
20-Oct-25

© Banner Engineering Corp. All rights reserved.
www.bannerengineering.com

235404
p/n: 235404 Rev. B

ПРОМЭЛЕКТРОНИКА/ sales@prom-elec.com

Banner Engineering Corp Limited Warranty

Banner Engineering Corp. warrants its products to be free from defects in material and workmanship for one year following the date of shipment. Banner Engineering Corp. will repair or replace, free of charge, any product of its manufacture which, at the time it is returned to the factory, is found to have been defective during the warranty period. This warranty does not cover damage or liability for misuse, abuse, or the improper application or installation of the Banner product.

THIS LIMITED WARRANTY IS EXCLUSIVE AND IN LIEU OF ALL OTHER WARRANTIES WHETHER EXPRESS OR IMPLIED (INCLUDING, WITHOUT LIMITATION, ANY WARRANTY OF MERCHANTABILITY OR FITNESS FOR A PARTICULAR PURPOSE), AND WHETHER ARISING UNDER COURSE OF PERFORMANCE, COURSE OF DEALING OR TRADE USAGE.

This Warranty is exclusive and limited to repair or, at the discretion of Banner Engineering Corp., replacement. **IN NO EVENT SHALL BANNER ENGINEERING CORP. BE LIABLE TO BUYER OR ANY OTHER PERSON OR ENTITY FOR ANY EXTRA COSTS, EXPENSES, LOSSES, LOSS OF PROFITS, OR ANY INCIDENTAL, CONSEQUENTIAL OR SPECIAL DAMAGES RESULTING FROM ANY PRODUCT DEFECT OR FROM THE USE OR INABILITY TO USE THE PRODUCT, WHETHER ARISING IN CONTRACT OR WARRANTY, STATUTE, TORT, STRICT LIABILITY, NEGLIGENCE, OR OTHERWISE.**

Banner Engineering Corp. reserves the right to change, modify or improve the design of the product without assuming any obligations or liabilities relating to any product previously manufactured by Banner Engineering Corp. Any misuse, abuse, or improper application or installation of this product or use of the product for personal protection applications when the product is identified as not intended for such purposes will void the product warranty. Any modifications to this product without prior express approval by Banner Engineering Corp will void the product warranties. All specifications published in this document are subject to change; Banner reserves the right to modify product specifications or update documentation at any time. Specifications and product information in English supersede that which is provided in any other language. For the most recent version of any documentation, refer to: www.bannerengineering.com.

For patent information, see www.bannerengineering.com/patents.

© Banner Engineering Corp. All rights reserved.