QM42-DPSx-1Q Differential Pressure Sensor

Features

The differential pressure sensor offers accurate low-differential pressure measurement of air and non-condensing, non-corrosive gases in applications such as air filter monitoring, isolation and clean rooms, building pressurization and dust collectors.



- Silicon piezoresistive differential pressure core
- Aluminum alloy housing
- Senses up to ±1 inches of water column using the **QM42-DPS1-1Q** model
- Senses up to ±5 inches of water column using the **QM42-DPS5-1Q** model
- Senses up to ± 20 inches of water column using the **QM42-DPS20-1Q** model

Models

Model	Description	Interface	Connection
QM42-DPS1-1Q	Differential Pressure Sensor ±1 in w.c. and 10 ft of tubing	1-wire serial	2.09 m (6.9 ft) cable with a 5-pin M12 quick disconnect (QD) connector
QM42-DPS5-1Q	Differential Pressure Sensor ±5 in w.c. and 10 ft of tubing		
QM42-DPS20-1Q	Differential Pressure Sensor ±20 in w.c. and 10 ft of tubing		

Wiring

5-pin M12 male quick disconnect	Pin	Wire Color	Description
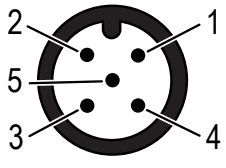	1	Brown (bn)	Supply +
	2	White (wh)	Serial select
	3	Blue (bu)	Ground
	4		No connection
	5	Gray (gy)	1-wire serial communication

Holding Registers

*Holding registers for the **QM42-DPS1-1Q** model*

Sensor Register	Output Type	I/O Range		Holding Register Representation		Measured Results
		Minimum	Maximum	Minimum (Decimal)	Maximum (Decimal)	
1	Pressure (Inches of Water)	-1	1	-1000	1000	Register value ÷ 1000
2	Pressure (PSI)	-0.036	0.036	-36	36	Register value ÷ 1000
3	Temperature (F)	-40	221	-4000	22100	Register value ÷ 100
4	Temperature (C)	-40	105	-4000	10500	Register value ÷ 100
5	Pressure (Pa)	-248	248	-248	248	Register value

*Holding registers for the **QM42-DPS5-1Q** model*

Sensor Register	Output Type	I/O Range		Holding Register Representation		Measured Results
		Minimum	Maximum	Minimum (Decimal)	Maximum (Decimal)	
1	Pressure (Inches of Water)	-5	5	-5000	5000	Register value ÷ 1000
2	Pressure (PSI)	-0.180	0.180	-180	180	Register value ÷ 1000
3	Temperature (F)	-40	221	-4000	22100	Register value ÷ 100
4	Temperature (C)	-40	105	-4000	10500	Register value ÷ 100
5	Pressure (Pa)	-1244	1244	-1244	1244	Register value

Original Instructions
01-Sep-26

© Banner Engineering Corp. All rights reserved.
www.bannerengineering.com

220219
p/n: 220219 Rev. D

ПРОМЭЛЕКТРОНИКА/ sales@prom-elec.com

*Holding registers for the **QM42-DPS20-1Q** model*

Sensor Register	Output Type	I/O Range		Holding Register Representation		Measured Results
		Minimum	Maximum	Minimum (Decimal)	Maximum (Decimal)	
1	Pressure (Inches of Water)	-20	20	-20000	20000	Register value ÷ 1000
2	Pressure (PSI)	-0.722	0.722	-722	722	Register value ÷ 1000
3	Temperature (F)	-40	221	-4000	22100	Register value ÷ 100
4	Temperature (C)	-40	105	-4000	10500	Register value ÷ 100
5	Pressure (Pa)	-4977	4977	-4977	4977	Register value

Installing the Pressure Sensor

The pressure sensor can be mounted to any surface using fasteners sized for the 1/8-inch (3.2 mm) diameter through-holes on the base of the unit. The optional **BWA-BK-001** bracket may be used for mounting to a magnetic surface.

The supplied tubing has an 1/8 inch inner diameter and is intended to fit the barbed fittings on the high (+) and low (-) pressure ports. Cut the tubing to the length required, but for the best results, keep the tubing as short as possible. Install the high (+) side to the upstream or high-line pressure and install the low (-) side to downstream or low-line pressure.

Specifications

Supply Voltage
3.6 V DC to 5.5 V DC

Current Consumption
< 3 mA

Pressure Range
QM42-DPS1-1Q: ±1 inches water column (wc)
QM42-DPS5-1Q: ±5 inches water column (wc)
QM42-DPS20-1Q: ±20 inches water column (wc)

Output
1-wire serial

Accuracy
0.2% full scale

Indicators
Green flashing: Power ON
Amber flashing: Serial Tx

Proof and Burst Pressure
QM42-DPS1-1Q: Proof Pressure: 100× Maximum Operating Pressure
QM42-DPS1-1Q: Burst Pressure: 300× Maximum Operating Pressure
QM42-DPS5-1Q: Proof Pressure: 40× Maximum Operating Pressure
QM42-DPS5-1Q: Burst Pressure: 60× Maximum Operating Pressure
QM42-DPS20-1Q: Proof Pressure: 10× Maximum Operating Pressure
QM42-DPS20-1Q: Burst Pressure: 25× Maximum Operating Pressure

Stability
≤ 0.2% full scale per year

Included PVC Tubing
Inner diameter: 0.125 in
Outer diameter: 0.25 in
Length: 10 ft

Electrical Connection
Conduit fitting with cable

Measuring Media
Gaseous

Pressure Interface
Dual barbed ports

Temperature
Compensated: –20 °C to +85 °C (–4 °F to +185 °F)
Operating: –25 °C to +85 °C (–13 °F to +185 °F)

Zero/Span Offset Tolerance
Zero temperature drift
± 0.5% full scale per °C
Humidity Limits (non-condensing) 0 to 95% RH

Communication Hardware
Interface: 1-wire serial interface
Baud rates: 9.6k, 19.2k (default), or 38.4k
Data format: 8 data bits, no parity (default, 1 stop bit)

Communication Protocol
Sure Cross DX80 Sensor Node with a 1-wire Serial Interface

Connection
2.09 m (6.9 ft) cable with a 5-pin M12 male quick disconnect

Construction
Black anodized aluminum alloy

© Banner Engineering Corp. All rights reserved.
www.bannerengineering.com

Dimensions

All measurements are listed in millimeters [inches], unless noted otherwise. The measurements provided are subject to change.

Dimensions

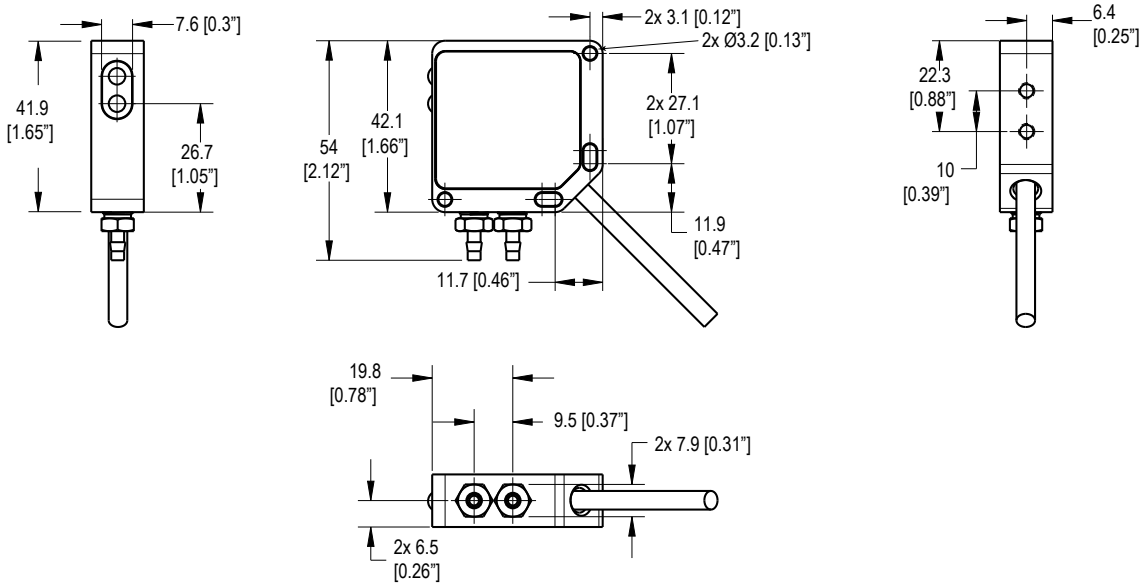

Accessories

Bracket BWA-BK-005 is included with the QM42-DPSx-2Q sensor.

BWA-BK-001

- Includes magnetic mounting bracket **SMB42FLM12** and 2 mounting screws
- CAD Files: DXF, PDF, IGS, STP

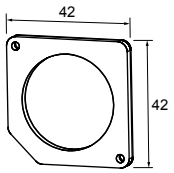

BWA-BK-005

- Use when measuring high-frequency vibrations or when mounting the sensor to curved surfaces
- Includes **SMB42FLAT** stainless steel bracket, 1/4"-28 screw mount, and one piece of 3M™ thermally conductive adhesive transfer tape
- CAD Files: DXF, PDF, IGS, STP

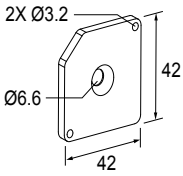

BWA-M12CAB-MAG

- Magnetic bracket to manage Banner M12 cables
- 34 mm x 19 mm overall
- CAD Files: DXF, PDF, IGS, STP

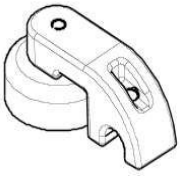

BWA-DPS-PROBE

- Duct pressure probe with 2-inch length hose barb
- 38 mm diameter flange mount



BWA-TUBE-001 Tubing

- Clear PVC Durometer 65A
- Max Pressure 60 PSI at 70°F
- 10 ft long, 1/8 in ID, 1/4 in OD

Banner Engineering Corp Limited Warranty

Banner Engineering Corp. warrants its products to be free from defects in material and workmanship for one year following the date of shipment. Banner Engineering Corp. will repair or replace, free of charge, any product of its manufacture which, at the time it is returned to the factory, is found to have been defective during the warranty period. This warranty does not cover damage or liability for misuse, abuse, or the improper application or installation of the Banner product.

© Banner Engineering Corp. All rights reserved.
www.bannerengineering.com

THIS LIMITED WARRANTY IS EXCLUSIVE AND IN LIEU OF ALL OTHER WARRANTIES WHETHER EXPRESS OR IMPLIED (INCLUDING, WITHOUT LIMITATION, ANY WARRANTY OF MERCHANTABILITY OR FITNESS FOR A PARTICULAR PURPOSE), AND WHETHER ARISING UNDER COURSE OF PERFORMANCE, COURSE OF DEALING OR TRADE USAGE.

This Warranty is exclusive and limited to repair or, at the discretion of Banner Engineering Corp., replacement. **IN NO EVENT SHALL BANNER ENGINEERING CORP. BE LIABLE TO BUYER OR ANY OTHER PERSON OR ENTITY FOR ANY EXTRA COSTS, EXPENSES, LOSSES, LOSS OF PROFITS, OR ANY INCIDENTAL, CONSEQUENTIAL OR SPECIAL DAMAGES RESULTING FROM ANY PRODUCT DEFECT OR FROM THE USE OR INABILITY TO USE THE PRODUCT, WHETHER ARISING IN CONTRACT OR WARRANTY, STATUTE, TORT, STRICT LIABILITY, NEGLIGENCE, OR OTHERWISE.**

Banner Engineering Corp. reserves the right to change, modify or improve the design of the product without assuming any obligations or liabilities relating to any product previously manufactured by Banner Engineering Corp. Any misuse, abuse, or improper application or installation of this product or use of the product for personal protection applications when the product is identified as not intended for such purposes will void the product warranty. Any modifications to this product without prior express approval by Banner Engineering Corp will void the product warranties. All specifications published in this document are subject to change; Banner reserves the right to modify product specifications or update documentation at any time. Specifications and product information in English supersede that which is provided in any other language. For the most recent version of any documentation, refer to: www.bannerengineering.com.

For patent information, see www.bannerengineering.com/patents.

© Banner Engineering Corp. All rights reserved.