MODEL NO.	"L"	P/N
PITL26UM6-VL	2000 [79]	802116
PITL23UM6-VL	1000 [39]	801984

NOTES:

1. OPERATING TEMPERATURE -55°C ~ +70°C.
2. MINIMUM BEND RADIUS R15.
3. DIMENSIONAL TOLERANCE +/- 5%.
4. 20 mm SPOT SIZE AT 100 mm RANGE.

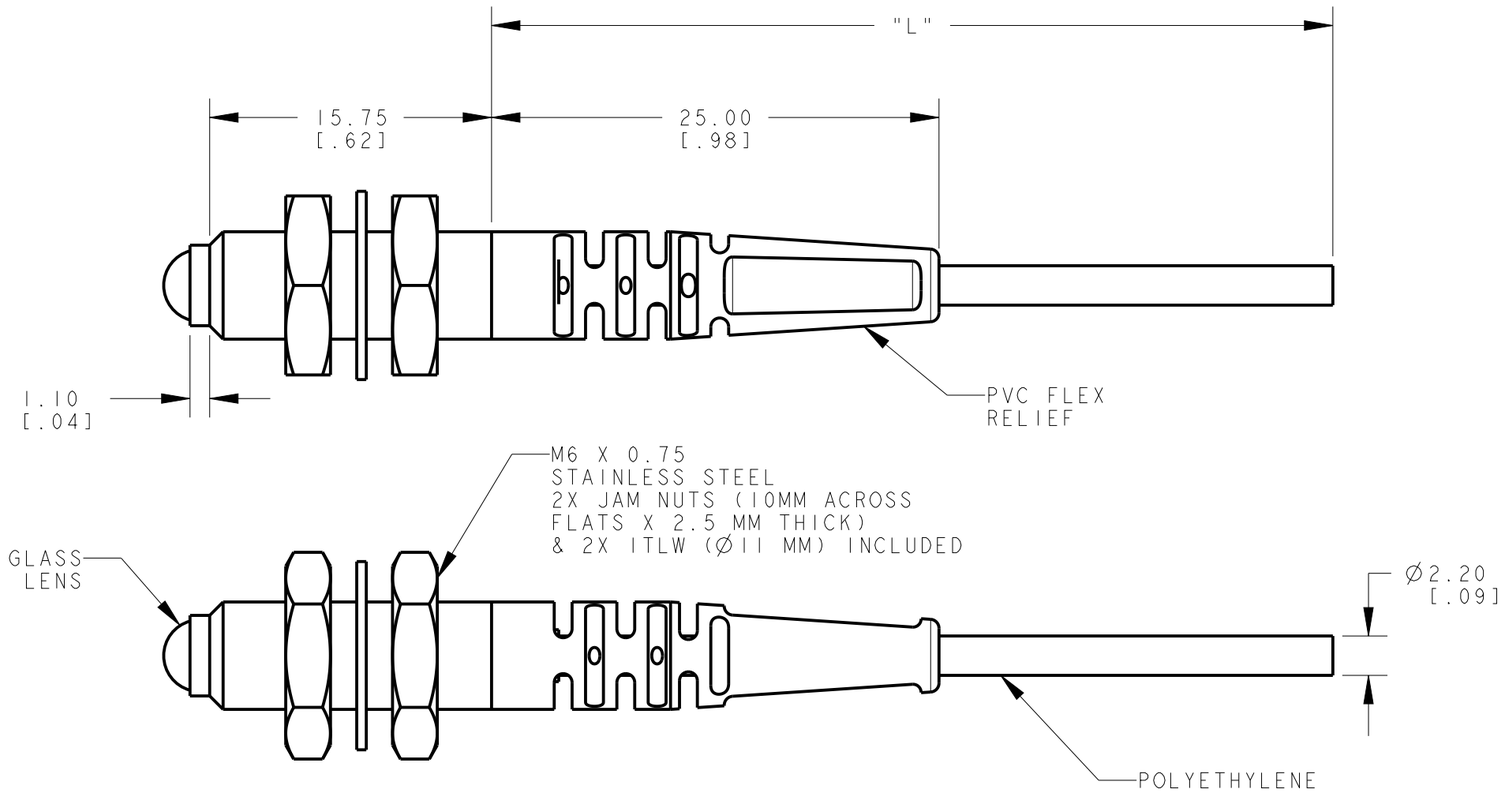

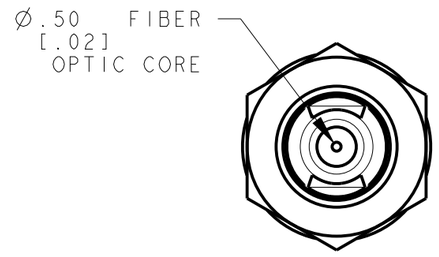

NOTES:
1. ALL DIMENSIONS ARE MILLIMETERS [INCHES] UNLESS OTHERWISE NOTED.
2. REFER TO "www.bannerengineering.com" FOR ADDITIONAL DATA AND SPECIFICATIONS.

This drawing is the property of BANNER ENGINEERING CORP. Any use or reproduction, in any form, without prior written permission of Banner is prohibited.
© 2015 Banner Engineering Corp.

THIRD ANGLE PROJECTION

BANNER ENGINEERING CORP.
www.bannerengineering.com

TITLE

PITL2 M6 VANTAGE LINE SERIES UNTERMINATED

SIZE	DRAWING NO.	REV.
B	199223	B
SCALE 3:1		SHEET 1 OF 1

CREO

ПРОМЭЛЕКТРОНИКА/ sales@prom-elec.com