MultiHop Radio Product Manual

Original Instructions
p/n: 151317 Rev. K
21-Apr-26
© Banner Engineering Corp. All rights reserved. www.bannerengineering.com

ПРОМЭЛЕКТРОНИКА/ sales@prom-elec.com

Contents

Chapter 1 MultiHop Radio Overview 4
1.1 MultiHop Application Modes 5
1.1.1 Modbus Mode 5
1.1.2 Transparent Mode 6
1.1.3 Example: Force a Single Route in Transparent Mode 6

Chapter 2 MultiHop Radio Features 7
2.1 Dimensions 7
2.2 DX80E Housings Dimensions 9

Chapter 3 Set Up Your MultiHop Network 10
3.1 Configure the MultiHop Radios 10
3.1.1 Apply Power to the MultiHop Radio 10
3.2 Set the MultiHop Radio ID 11
3.3 Bind a MultiHop Radio (with Rotary Dials) 11
3.3.1 Server and Repeater LED Behavior 12
3.3.2 Client LED Behavior 12
3.4 Conduct a Site Survey 12
3.4.1 Conduct a MultiHop Site Survey (from the LCD Menu System) 12
3.4.2 Interpreting the MultiHop Site Survey Results 13
3.4.3 Improving Your Site Survey Results within a MultiHop Network 14

Chapter 4 Installing Your Sure Cross® Radios 15
4.1 Mounting Sure Cross Devices Outdoors 15
4.1.1 Watertight Glands and NPT Ports 15
4.2 Other Installation Requirements 16
4.3 Installation Quick Tips 16
4.3.1 Create a Clear Communication Path 16
4.3.2 Increase the Height of the Antennas 16
4.3.3 Collocated Radios 17
4.3.4 Be Aware of Seasonal Changes 17
4.4 Installing a Basic Remote Antenna 17
4.4.1 Weatherproof Remote Antenna Installations 18
4.4.2 Installing Remote Antennas 19
4.4.3 Mount a Dome Antenna to the Enclosure 19
4.4.4 Use an N-Type, Pole-Mounted Antenna 20

Chapter 5 Modbus Register Configuration 22
5.1 00000s Standard Physical Inputs 22
5.1.1 00400s Extra Inputs 22
5.2 00500s Standard Physical Outputs 22
5.2.1 00900s Extra Outputs 22
5.3 01000s Input Parameters 23
5.3.1 Switch Power Input Parameters 23
5.4 02000s Output Parameters 24
5.5 02950s Default Output Parameters 24
5.6 03000s Discrete Input Parameters 25
5.7 03300s Analog Input Parameters 25
5.7.1 Temperature Parameters 26
5.8 03500s Counter Input Parameters 27
5.9 03600s H-Bridge Output Parameters 28
5.9.1 03600s Switch Power Output Parameters 28
5.10 03700s Discrete Output Parameters 29
5.11 04000s Analog Output Parameters 29
5.12 04150s Initialization Controls 30
5.13 04400s Output Flash Pattern Parameters 30
5.14 04500s M-GAGE Parameters 30
5.15 04800s Ultrasonic Input Parameters 31
5.16 06050s Battery Monitoring Parameters 32
5.17 Configure the SDI-12 Inputs 32
5.17.1 Basic SDI-12 Interface Parameters 33
5.17.2 Result Registers Configuration Parameters 33
5.17.3 SDI-12 Device Result Registers 36
5.17.4 SDI-12 Device Settings 36
5.17.5 Configuring for Acclima SDI-12 Sensors 37

© Banner Engineering Corp. All rights reserved. www.bannerengineering.com

5.17.6 Configuring for Decagon 5T3 SDI-12 Sensors ... 38
5.18 Manufacturer Parameter Registers ... 38
5.19 Device and System Parameters ... 39
5.19.1 08200s Sample On Demand ... 39

Chapter 6 Additional Information ... 40
6.1 MultiHop Radio Menu System ... 40
6.2 Sleep Mode in MultiHop Radios ... 42
6.2.1 Enabling Deep Sleep Mode ... 42
6.3 Reset the Radio or Restore the Factory Defaults ... 43
6.4 Examples ... 43
6.5 Configuring Low-Power Radios ... 44
6.6 Connecting Multiple Modbus Sensors to a MultiHop Radio ... 44
6.6.1 Set the Device ID on a Modbus Sensor ... 44
6.6.2 Wiring Multiple Modbus Sensors to a MultiHop Server Radio ... 45
6.7 Network Formation ... 46
6.7.1 Binding Mode: What Does MultiHop Binding Do? ... 46
6.7.2 Why Would I Manually Set the Binding Code? ... 46
6.7.3 Bind a MultiHop Radio using Menu Navigation ... 48
6.7.4 Bind a MultiHop Radio (without Rotary Dials) ... 48
6.7.5 Bind a MultiHop Radio without Rotary Dials Using Modbus Commands ... 49
6.7.6 Bind a MultiHop Radio Using the Configuration Software ... 50
6.7.7 Conduct a Site Survey using Modbus Commands ... 50
6.7.8 MultiHop Network Formation ... 51
6.7.9 Formation Percentage on MultiHop Radios ... 52
6.7.10 Forced Routing with MultiHop Radios ... 53
6.8 Power ... 54
6.8.1 Using 10–30 V DC to Power Two Radios ... 54
6.8.2 Using Solar to Power Two Radios ... 54
6.9 Communication ... 55
6.9.1 Set the MultiHop Baud Rate to 1200 ... 55
6.9.2 Set the MultiHop Baud Rate to 2400 ... 55

Chapter 7 Product Support and Maintenance ... 56
7.1 Sure Cross® MultiHop Data Radio Documentation ... 56
7.2 Verifying the Firmware Version of the MultiHop Radio ... 56
7.3 Maintenance ... 56
7.3.1 Replacing the Main Body Gasket ... 56
7.3.2 Replacing the Rotary Dial Access Cover ... 57
7.3.3 Install or Replace the Battery for a DX81 Model ... 57
7.3.4 Install or Replace the Battery for a DX80 Integrated Battery Model ... 58
7.3.5 Install or Replace the Battery (DX99...D Models) ... 59
7.4 Sure Cross® Radio Certifications ... 59
7.4.1 FCC and ISED Certification for 900 MHz ... 59
7.4.2 FCC and ISED Certification for 2.4 GHz ... 60
7.4.3 Exporting Sure Cross® Radios ... 61
7.5 Contact Us ... 61
7.6 Warnings ... 62
7.7 Banner Engineering Corp Limited Warranty ... 62

Index ... 64

Glossary ... 66

© Banner Engineering Corp. All rights reserved. www.bannerengineering.com

Chapter Contents

1.1 MultiHop Application Modes 5

Chapter 1 MultiHop Radio Overview

MultiHop networks are made up of one client radio and many repeater and server radios.

The MultiHop networks are self-forming and self-healing networks constructed around a parent-child communication relationship. A MultiHop Radio is either a client radio, a repeater radio, or a server radio.

- The client radio controls the overall wireless network.
- The repeater radios extend the range of the wireless network.
- The server radios are the endpoint of the wireless network.

At the root of the wireless network is the client radio. All repeater or server radios within range of the client radio connect as children of the client radio, which serves as their parent. After repeater radios synchronize to the client radio, additional radios within range of the repeater can join the network. The radios that synchronize to the repeater radio form the same parent/child relationship the repeater has with the client radio: the repeater is the parent and the new radios are children of the repeater. The network formation continues to build the hierarchical structure until all MultiHop radios connect to a parent radio. A MultiHop radio can only have one designated parent radio. If a radio loses synchronization to the wireless network it may reconnect to the network through a different parent radio.

For the simple example network shown below, the following relationships exist:

- Radio 1 is the client radio and is parent to radio 2 (repeater).
- Radio 2 (repeater) is a child to radio 1 (client) and parent to radios 3 (server) and 4 (repeater).
- Radio 4 (repeater) is a child to radio 2 (repeater) and parent to radios 5 and 6 (both servers).

Figure 1. MultiHop radio network

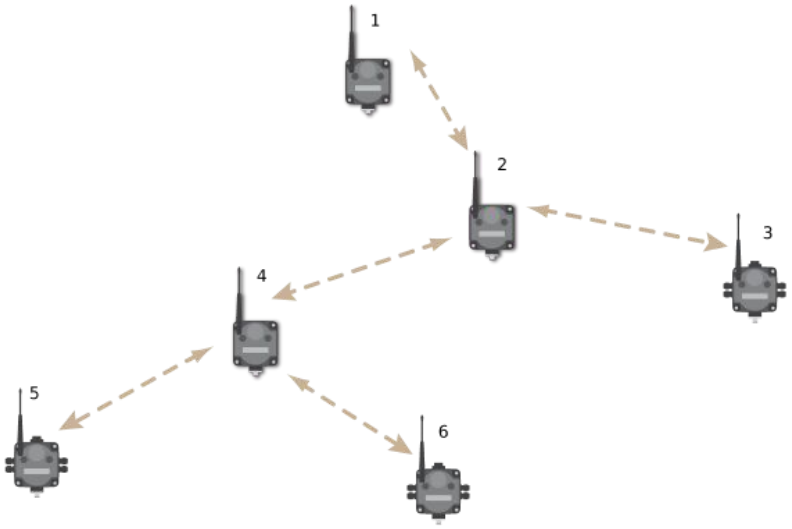

On the LCD of each device, the parent device address (PADR) and local device address (DADR) are shown.

MultiHop Client Radio. Within a MultiHop data radio network, there is only one client radio. The client radio controls the overall timing of the network and is always the parent device for other MultiHop radios. The host system connects to this client radio.

MultiHop Repeater Radio. When a MultiHop radio is set to repeater mode, it acts as both a parent and a child. The repeater receives data packets from its parent, then re-transmits the data packet to the children within the repeater's network. The incoming packet of information is re-transmitted on both the radio link and the local serial link.

MultiHop Server Radio. The server radio is the end device of the MultiHop radio network. A radio in server mode does not re-transmit the data packet on the radio link, only on the local serial (wired) bus.

© Banner Engineering Corp. All rights reserved.

1.1 MultiHop Application Modes

The MultiHop radios operate in Modbus mode or transparent mode. Use the internal DIP switches to select the mode of operation. All MultiHop radios within a wireless network must be in the same mode.

1.1.1 Modbus Mode

Modbus application mode provides additional functionality to optimize RF packet routing performance and allows register-based access and configuration of various parameters on the MultiHop radio. Modbus application mode requires that the system host device be running a Modbus client program and that the client radio is connected directly to the host.

Packet Routing—In Modbus application mode, the client radio first discovers all connected Modbus servers in the network, then uses the Modbus ID contained in the incoming Modbus message to wirelessly route the packet only to the radio attached to the target Modbus server. The packet is then passed via the radio's serial interface to the Modbus device where it is processed. This is entirely transparent to the user. Direct packet-by-packet routing offers an advantage over broadcast addressing with MultiHop paths because each hop in the path can be retried independently in the event of a packet error. This results in significantly more reliable packet delivery over MultiHop paths.

Modbus IDs 01 through 10 are reserved for servers directly connected to the host (local I/O). As such, polling messages addressed to these devices are not relayed over the wireless link. Use Modbus IDs 11 through 60 for remote Modbus servers — devices serially connected to a data radio — allowing a maximum of 50 attached devices.

Shown is a basic wireless network operating in Modbus application mode. server devices may be any Modbus servers, including Banner's DX85 Modbus RTU Remote I/O devices or DX80 Gateways.

Figure 2. Wireless network operating in Modbus application mode

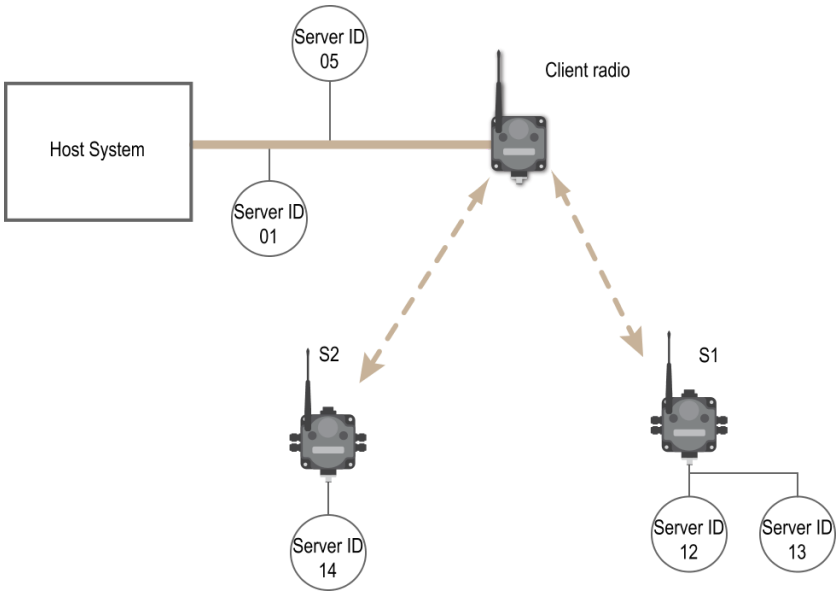

MultiHop Radio Registers and Radio IDs—The Modbus application mode also enables the host to access a radio's internal Modbus registers to access radio configuration and status information.

To enable access to a radio's internal Modbus registers, the radio itself must be assigned a Modbus ID, or MultiHop Radio ID, using the rotary dials on the front of the device. The left rotary dial acts as the tens unit while the right rotary dial acts as the ones unit. To set the server ID to 12, set the left dial to 1 and the right dial to 2.

When a Modbus message is received by the radio, the packet's server ID is compared to its own rotary dial address. If it matches, the radio accesses its internal Modbus registers. If it does not match, the radio delivers the packet to the serial interface thereby interrogating a connected Modbus server. The range of acceptable Modbus/MultiHop Radio IDs is from 11 to 60; a server ID setting of 0xFF disables access to the MultiHop radio's internal registers but still delivers addressed messages to Modbus servers that are serially connected to the radio. Detailed information about the contents and functions of the radio's Modbus registers is provided in table 2.

All MultiHop Radio internal registers are defined as 16-bit holding registers (4xxxx). To access the internal registers, set the radio to operate in Modbus mode (using the DIP switches) and set a valid MultiHop Radio ID (11 through 60).

*Note: The radio's rotary dial address must not be a duplicate of an attached Modbus server ID.

© Banner Engineering Corp. All rights reserved.
www.bannerengineering.com

- Rotary dial positions 11 through 60—Valid wireless Modbus IDs or MultiHop Radio IDs
- Rotary dial position FF—Devices set to FF are not directly addressed by the Modbus host system but can deliver the message to the serially connected Modbus servers

This example host system is connected to three hardwired devices: DX85 Remote I/O Modbus server 01, DX85 Remote I/O Modbus server 05, and the client MultiHop Radio. Host messages for Modbus servers 01 through 10 are ignored by the client radio. Messages for Modbus servers or MultiHop Radios 11 through 60 are sent out the wireless network.

Figure 3. Example host system

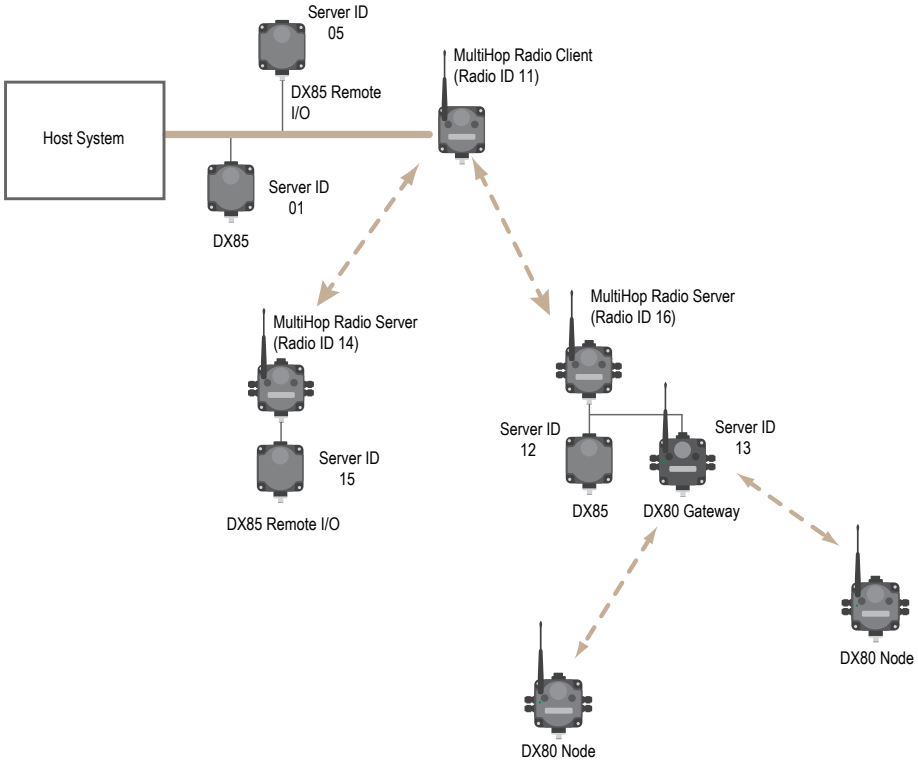

1.1.2 Transparent Mode

Use transparent mode for communication protocols other than Modbus.

In transparent mode, the MultiHop radio packetizes data received from the hardwired serial connection and transmits the packet to all radios within range. Because the recipient is not known, there is no acknowledgment of sent messages.

A wireless system by definition is a lossy link. It is up to the host system protocol to guarantee the data integrity. For reliable packet transmission, follow all rules for packet size and inter-character timing listed in the specifications and allow sufficient time between packets to avoid overloading the MultiHop radio network. The time between packets varies based on the size of the network.

1.1.3 Example: Force a Single Route in Transparent Mode

Use the Destination Address parameter to create a single end-to-end route while in transparent mode. Set the Destination Address parameter using the LCD menu system on the MultiHop radios (*DVCFG > DEST) or write to Modbus register 46403.

For a MultiHop client radio at 54321, a repeater radio at 43210, and a server radio at 32109, follow these instructions.

1. Set the destination address on the MultiHop radio client to 32109.
2. Set the destination address on the MultiHop radio server to 54321.

Now routing retries and acknowledgements take affect.

For more information about Transparent Mode and forced routing, see "Forced Routing with MultiHop Radios" on page 53.

© Banner Engineering Corp. All rights reserved.
www.bannerengineering.com

Chapter Contents

2.1 Dimensions..... 7
2.2 DX80E Housings Dimensions 9

Chapter 2 MultiHop Radio Features

1. Rotary Dials. Set the Modbus ID when operating in Modbus mode. (Not used on the Ethernet Data Radio.)
2. Push Button 1. Single-click to advance across all top-level data radio menus. Single-click to move down interactive menus, once a top-level menu is chosen. (See MultiHop Radio Menu System.)
3. Push Button 2. Double-click to select a menu and to enter manual scrolling mode. Double-click to move up one level at a time. Triple-click to enter binding mode.
4. LED 1 and 2. Provide real-time feedback to the user regarding RF link status, serial communications activity, and the error state.
5. LCD Display. Six-character display provides run mode user information such as the number of packets sent and received. This display allows the user to conduct a site survey.
6. 5-pin M12 Quick-Disconnect Port. The M12 power connection is used for serial connections and power. (Not available on the Ethernet Data Radio.)



2.1 Dimensions

Figure 4. MultiHop Radio, Low Profile Housing

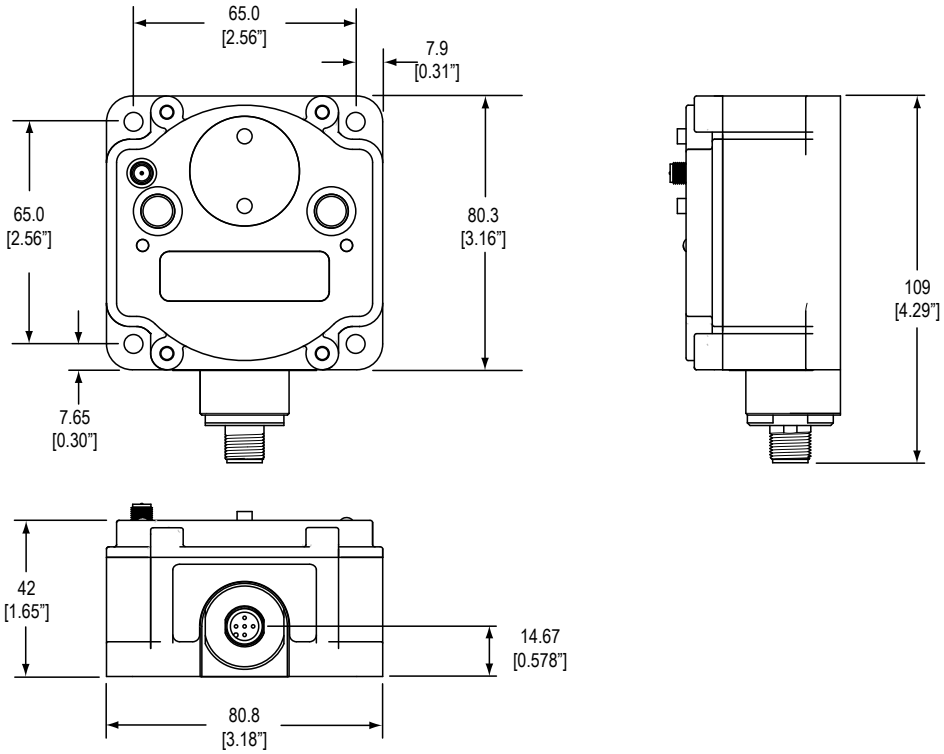

© Banner Engineering Corp. All rights reserved.
www.bannerengineering.com

Figure 5. MultiHop Radio with I/O

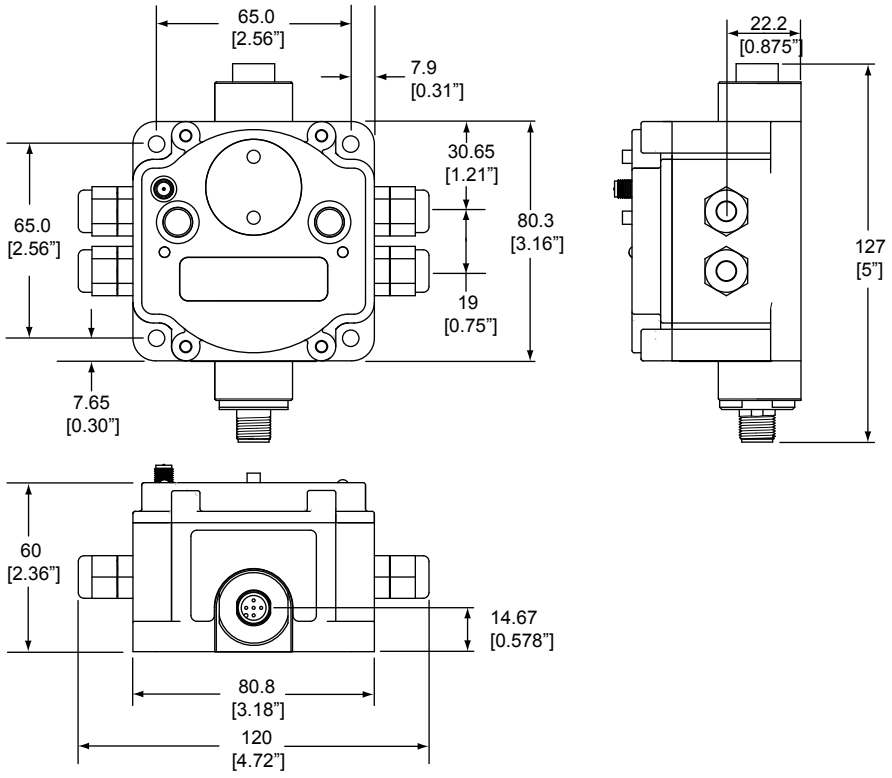

© Banner Engineering Corp. All rights reserved.
www.bannerengineering.com

2.2 DX80E Housings Dimensions

All measurements are listed in millimeters, unless noted otherwise. The measurements provided are subject to change.

Figure 6. DX80...E Housing

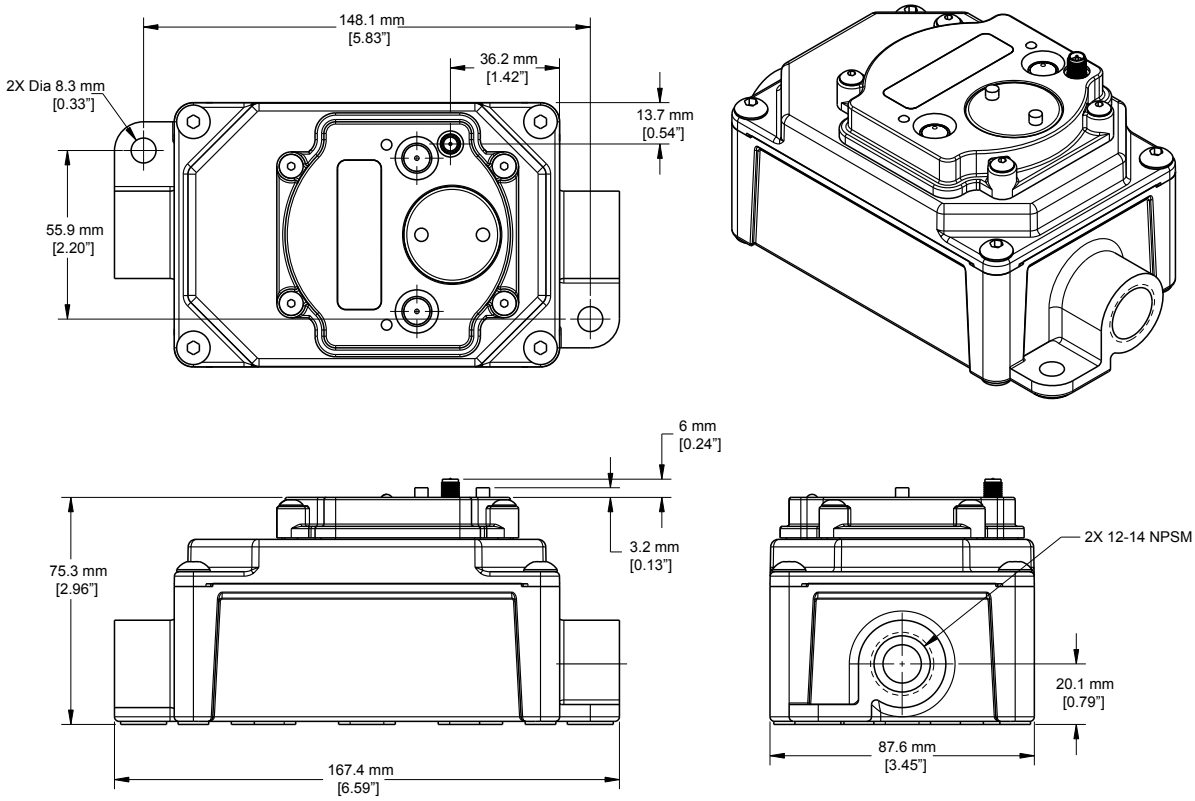

© Banner Engineering Corp. All rights reserved.
www.bannerengineering.com

Chapter Contents

3.1 Configure the MultiHop Radios 10
3.2 Set the MultiHop Radio ID 11
3.3 Bind a MultiHop Radio (with Rotary Dials) 11
3.4 Conduct a Site Survey 12

Chapter 3 Set Up Your MultiHop Network

To set up and install your wireless MultiHop network, follow these steps:

1. If your radios have DIP switches, configure the DIP switches of all devices. For DIP switch configurations, refer to the product's datasheet.
2. Connect the sensors to the MultiHop radios if applicable. For available I/O, refer to the product's datasheet.
3. Apply power to all devices.
4. If your MultiHop radio has rotary dials, set the MultiHop Radio ID. If your MultiHop radio has no rotary dials, continue to the next step.
5. Form the wireless network by binding the server and repeater radios to the client radio.
6. Observe the LED behavior to verify the devices are communicating with each other.
7. Configure any I/O points to use the sensors connected to the Sure Cross devices.
8. Conduct a site survey between the MultiHop radios.
9. Install your wireless sensor network components.

For additional information, refer to one of the following documents:

- MultiHop Data Radio Quick Start Guide: 152653
- MultiHop Data Radio Instruction Manual: 151317
- MultiHop Register Guide: 155289

3.1 Configure the MultiHop Radios

Before configuring the devices, disconnect the power to all MultiHop radios.

MultiHop Radios use the client device identification number to form groups of radios that communicate with each other. Follow the procedure outlined below for binding radios to a particular client radio.

1. Access the DIP switches by removing the four screws that mount the cover to the bottom housing.
2. Remove the cover from the housing without damaging the ribbon cable or the pins the cable plugs into.
3. Using the client/repeater/server DIP switches, set one unit to be the client radio. By default, the MultiHop radios ship from the factory configured to be repeater radios.
4. Using the same DIP switches, set the other data radios to be repeaters or servers.
5. Set any additional DIP switches now. (See the DIP Switches section in the datasheet for the positions and descriptions.) By default, the MultiHop radios ship from the factory in Modbus mode. If you need the radio to be in Transparent mode, configure that DIP switch now.
6. Apply power to the MultiHop radios to activate the DIP switch changes.

3.1.1 Apply Power to the MultiHop Radio

Connecting power to the communication pins will cause permanent damage. For *Flex*Power devices, do not apply more than 5.5 V to the gray wire. The FlexPower radios will operate equally well when powered from the brown or gray wire. It is not necessary to supply both. The power for the sensors can be supplied by the radio's SPx terminals or from the 10 V DC to 30 V DC used to power the radio.

© Banner Engineering Corp. All rights reserved.
www.bannerengineering.com

	Pin	Wire Color	Models powered by 10 to 30 V dc with RS-485	FlexPower models with RS-485	FlexPower models with RS-232
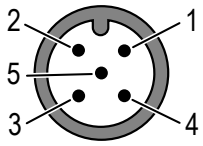	1	brown	10 V DC to 30 V DC	10 V DC to 30 V DC	10 V DC to 30 V DC
	2	white	RS-485 / D1 / B / +	RS-485 / D1 / B / +	RS-232 Tx
	3	blue	dc common (GND)	dc common (GND)	dc common (GND)
	4	black	RS-485 / D0 / A / -	RS-485 / D0 / A / -	RS-232 Rx
	5	gray	-	3.6 V DC to 5.5 V DC	3.6 V DC to 5.5 V DC

3.2 Set the MultiHop Radio ID

The Modbus ID is an identifying number used for devices within a Modbus system. When using more than one Modbus peripheral, assign each peripheral device a unique ID number.

For MultiHop radios with rotary dials, use the rotary dials to set the device's MultiHop Radio ID. The left dial sets the left digit and the right dial sets the right digit.

- Modbus IDs 01 through 10—Reserved for servers directly connected to the host (local I/O). Polling messages addressed to these devices are not relayed over the wireless link.
- Modbus IDs 11 through 60—Use for MultiHop client, repeater, and server radios. Up to 50 devices (local servers and remote servers) may be used in this system.

If your MultiHop radio does not have rotary dials, you must use the client radio to set the Modbus ID during the binding process.

3.3 Bind a MultiHop Radio (with Rotary Dials)

To create your MultiHop network, bind the repeater and server radios to the designated client radio.

Before binding (multihop) your radio, verify you have used the radio's rotary dials to assign a unique server ID to the radio.

1. Apply power to all MultiHop radios and place the MultiHop radios configured as servers or repeaters at least two meters away from the client radio.
2. Put the MultiHop client radio into binding mode.
   - For two-button client radios, triple-click button 2.
   - For one-button client radios, triple-click the button.

   For the two LED/button models, both LEDs flash red and the LCD shows *BINDNG and *client. For single LED/button models, the LED flashes alternatively red and green.
3. Put the MultiHop repeater or server radio into binding mode.
   - For two-button radios, triple-click button 2.
   - For one-button radios, triple-click the button.

   The child radio enters binding mode and searches for any client radio in binding mode. While searching for the client radio, the two red LEDs flash alternately. When the child radio finds the client radio and is bound, both red LEDs are solid for four seconds, then both red LEDs flash simultaneously four times. For M-GAGE Nodes, both colors of the single LED are solid (looks orange), then flash. After the server/repeater receives the binding code transmitted by the client, the server and repeater radios automatically exit binding mode.
4. Repeat step 3 for as many server or repeater radios as are needed for your network.
5. When all MultiHop radios are bound, exit binding mode on the client.
   - For two-button client radios, double-click button 2.
   - For one-button client radios, double-click the button.

   All radio devices begin to form the network after the client data radio exits binding mode.

Child Radios Synchronize to the Parent Radios

The synchronization process enables a Sure Cross® radio to join a wireless network formed by a client radio. After power-up, synchronization may take a few minutes to complete. First, all radios within range of the client data radio wirelessly synchronize to the client radio. These radios may be server radios or repeater radios.

© Banner Engineering Corp. All rights reserved.
www.bannerengineering.com

After repeater radios are synchronized to the client radio, any radios that are not in sync with the client but can "hear" the repeater radio will synchronize to the repeater radios. Each repeater “family” that forms a wireless network path creates another layer of synchronization process. The table below details the process of synchronization with a parent. When testing the devices before installation, verify the radio devices are at least two meters apart or the communications may fail.

3.3.1 Server and Repeater LED Behavior

All bound radios set to server or repeater modes follow this LED behavior after powering up.

		Two Button/LED Models		Single Button/LED Models
Process Steps	Response	LED 1	LED 2	LED
1	Power is supplied to the radio.	-	Solid amber (briefly)	Solid amber
2	The server/repeater searches for a parent device.	Flashes red	-	Flashes red (1 per 3 sec)
3	A parent device is detected. The server/repeater searches for other parent radios within range.	Solid red	-	Solid red
4	The server/repeater selects a suitable parent.	-	Solid amber	Solid amber
5	The server/repeater attempts to synchronize to the selected parent.	-	Solid red	Solid red
6	The server/repeater is synchronized to the parent.	Flashes green	-	Flashes green
7	The server/repeater enters RUN mode.	Solid green, then flashes green		Solid green, then flashes green
	Serial data packets begin transmitting between the server/repeater and its parent radio.	-	Flashes amber	Flashes amber

3.3.2 Client LED Behavior

All bound radios set to operate as clients follow this LED behavior after powering up.

		Two Button/LED Models		Single Button/LED Models
Process Steps	Response	LED 1	LED 2	LED
1	Power is supplied to the client radio	-	Solid amber	Solid amber
2	The client radio enters RUN mode.	Flashes green	-	Flashes green
	Serial data packets begin transmitting between the client and its children radios.	-	Flashes amber	Flashes amber

3.4 Conduct a Site Survey

A site survey analyzes the radio signal between a MultiHop child radio and its parent and reports the number of data packets missed or received at relative signal strengths.

3.4.1 Conduct a MultiHop Site Survey (from the LCD Menu System)

Perform the site survey before permanently installing your network to pre-screen a site for its radio communication potential, compare link quality in different locations in a factory, or assist with final antenna placement and aiming.

Site surveys can be conducted from either the client, repeater, or server radios. A client radio is always a parent and the server radios are always children radios within the radio communication relationship. A repeater radio, however, may be both a child radio to the client or another repeater and a parent radio to other repeater or server radios. For a more detailed description of the parent-child relationships, refer to the device datasheets.

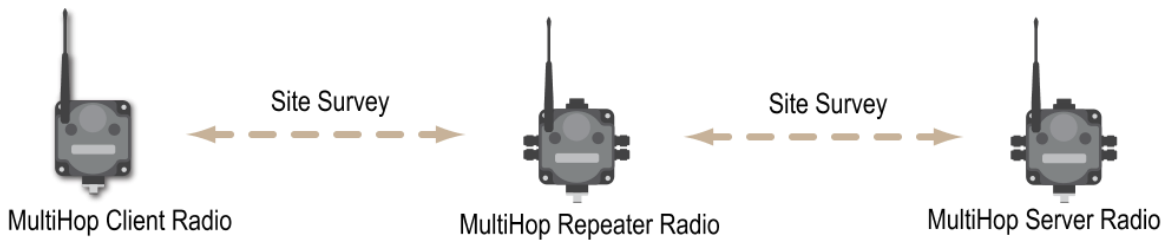

© Banner Engineering Corp. All rights reserved.
www.bannerengineering.com

Other radios bound within the same network remain synchronized to the network, but are blocked from sending data while the site survey is running. The site survey analyzes the signal strength between the selected child and its parent radio only. Disable site survey on one radio before initiating it from another.

Radios in site survey mode have a solid green LED for the duration of the site survey and the LCD scrolls the results. Because the statistics represent the lesser of the round-trip results, one person can ascertain the link quality from either device.

Single-click button 2 to pause or resume autoscrolling the site survey results. While paused, button 1 single-step advances through the four signal strength categories: green, yellow, red, and missed. Double-click button 2 to exit the results display. (Refer to the datasheet for the menu structure.)

1. On a MultiHop radio, press button 1 until the display reads *SITE.

   When the site survey runs, serial and I/O data radio communication between that parent and its children stops.
2. Single-click button 2 to enter the Site Survey menu.

   Client radio: The display reads CHLDRN. Repeater radio: The display reads PARENT. server radio: The display reads PARENT.
3. Select the MultiHop radio to analyze.

MultiHop Model	Select the radio to analyze:
From the client radio	Single-click button 2 to display the child radio's device address. (A radio's device address is displayed under its *RUN menu). Single click button 1 to scroll between all the client radio's children. When you reach the child radio you want to run the site survey with, single-click button 2.
From the repeater radio	Single-click button 1 to cycle between PARENT and CHLDRN. Single-click button 2 to select PARENT or CHLDRN. If conducting the site survey with one of the repeater's children, single-click button 1 to scroll among a repeater's child radios. (Each data radio's device address is displayed under its *RUN menu.) Single-click button 2 at the device address screen to select the child or parent and begin the site survey.
From the server radio	Single-click button 2 to display PARENT. Single-click button 2 to begin the site survey.

   The site survey begins. LED 2 on both the parent and child radios flash for every received RF packet. To indicate the parent is in site survey mode, LED 1 is a solid green. The data radio analyzes the quality of the signal between the parent and child by counting the number of data packets received and measuring the signal strength (green, yellow, and red).
4. Examine reception readings (G, Y, R, M) of the devices at various locations. M displays the percent of missed packets while G, Y, and R display the percent of received packets at those signal strengths. These values are continuously updated as long as the site survey is running.

   GRN = GREEN excellent signal strength; YEL = YELLOW good signal strength; RED = RED marginal signal strength; MIS = Percentage of missed packets. When possible, install all devices to optimize the percentage of YELLOW and GREEN data packets received.
5. While the site survey is in process, single-click button 2 to pause or resume autoscrolling the site survey results. While paused, button 1 single-step advances through the four signal strength categories: green, yellow, red, and missed. Double-click button 2 to exit the results display.
6. Double-click button 2 on either the child or the parent device.

   Site survey ends and the devices automatically resume operation.

3.4.2 Interpreting the MultiHop Site Survey Results

Site survey mode works by having two radios (one child and one parent) repeatedly exchange data packets. For every round-trip exchange of data, the child data radio keeps track of the weaker of the two paths. Both units report the statistics as a percentage on their LCD display.

The reports consists of sorting the data into one of four categories: Green, Yellow, Red, or Missed Packets.

- Green indicates strong signal,
- Yellow is less strong but still robust,

© Banner Engineering Corp. All rights reserved.
www.bannerengineering.com

- Red means the packet was received but has a margin of less than 15 dB, and
- A missed packet means the data did not arrive or contained a checksum error. (During normal operation, missed packets are re-tried until they are received without errors. During a site survey, missed packets are not re-tried.)

For applications with only a few hops, the system can tolerate up to 40% missed packets without serious degradation, but situations with more missed packets should be reviewed for proper antenna selection and placement, cabling, and transmit power levels. If your application includes many hops, modify the installation and antenna placement to reduce the missed packet count.

Any radio can initiate a site survey. Other radios on the same network ID remain synchronized to the network, but are blocked from sending data while the site survey is running. In installations with multiple child radios, the site survey analyzes the signal strength between the selected child and its parent radio only. Disable site survey on one radio before initiating it from another.

Radios in site survey mode have a solid green LED for the duration of the site survey and the LCD display scrolls the results. Because the statistics represent the lesser of the round-trip results, one person can ascertain the link quality from either device.

3.4.3 Improving Your Site Survey Results within a MultiHop Network

If a repeater radio is available in the network but is not being used, enable the forced routing function on the radio with a weak signal to force it to use a nearby radio with a stronger signal strength. See "Forced Routing with MultiHop Radios" on page 53 for more information.

If you cannot use forced routing or add a repeater radio to the network, use an 8 dBi omni-direction antenna or a 10 dBd directional antenna.

We also recommend raising the radio units to a higher elevation, either by physically moving the devices or installing the antenna(s) remotely at a higher position. Additional antenna cables are available from Banner Engineering if needed.

The absence of signals may also be because of the distance between the client (main) and server (remote) radios. If this is the case, please contact Banner Engineering for further assistance.

© Banner Engineering Corp. All rights reserved.
www.bannerengineering.com

Chapter Contents

4.1 Mounting Sure Cross Devices Outdoors 15
4.2 Other Installation Requirements 16
4.3 Installation Quick Tips 16
4.4 Installing a Basic Remote Antenna 17

Chapter 4 Installing Your Sure Cross® Radios

Follow these recommendations to install your wireless network components.

4.1 Mounting Sure Cross Devices Outdoors

Use a Secondary Enclosure. For most outdoor applications, we recommend installing your Sure Cross devices inside a secondary enclosure. For a list of available enclosures, refer to the Accessories List (p/n b_3147091).

Figure 7. Point the radio away from direct sunlight

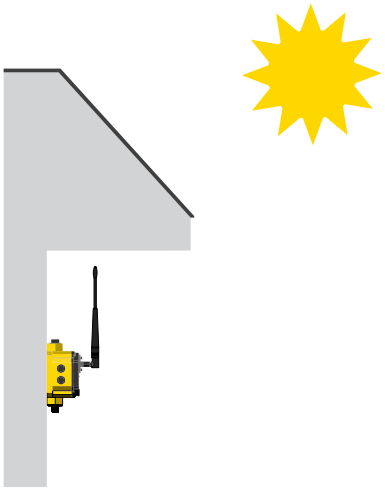

Point Away From Direct Sunlight—When you are not using a secondary enclosure, minimize the damaging effects of ultra-violet radiation by mounting the devices to avoid facing intense direct sunlight.

- Mount under an overhang or other source of shade,
- Install indoors, or
- Face the devices north when installing outside.

For harsh outdoor applications, consider installing your radio inside a secondary enclosure.

Mount Vertically to Avoid Collecting Rain—When possible, mount the devices where rain or snow will drain away from the device.

- Mount vertically so that precipitation, dust, and dirt do not accumulate on permeable surfaces.
- Avoid mounting the devices on flat or concave surfaces, especially if the display will be pointing up.

Remove Moisture and Condensation—If condensation is present in any device, add a small desiccant packet to the inside of the radio. To help vent the radios, Banner also sells a vented plug (model number **BWA-HW-031**) for the 1/2-inch NPT port of the Sure Cross radios.

4.1.1 Watertight Glands and NPT Ports

To make glands and plugs watertight, use PTFE tape and follow these steps.

1. Wrap four to eight passes of polytetrafluoroethylene (PTFE) tape around the threads as close as possible to the hexagonal body of the gland.
2. Manually thread the gland into the housing hole. Never apply more than 5 in-lbf of torque to the gland or its cable clamp nut. [1]

Figure 8. Watertight glands wrapped in PTFE tape



Seal any unused access holes with one of the supplied plastic plugs. To install a watertight plug:

1. Wrap four to eight passes of PTFE tape around the plug's threads, as close as possible to the flanged surface.
2. Carefully thread the plastic plug into the vacant hole in the housing and tighten using a slotting screwdriver. Never apply more than 10 in-lbf torque to the plastic plug.

If your device has an unused NPT port, install a watertight NPT plug:

[1] This is equivalent to the torque generated without using tools. If a wrench is used, apply only very light pressure. Torquing these fittings excessively damages the device.

© Banner Engineering Corp. All rights reserved.
www.bannerengineering.com

1. Wrap 12 to 16 passes of PTFE tape evenly across the length of the threads.
2. Manually thread the plug into the housing port until reaching some resistance.
3. Using a crescent wrench, turn the plug until all the plug's threads are engaged by the housing port or until the resistance doubles. Do not over-tighten as this will damage the device. These threads are tapered and will create a waterproof seal without over-tightening.

4.2 Other Installation Requirements

Reduce Chemical Exposure—Before installing any devices in a chemically harsh environment, contact the manufacturer for more information regarding the life-expectancy. Solvents, oxidizing agents, and other chemicals will damage the devices.

Minimize Mechanical Stress—Although these radio devices are very durable, they are sophisticated electronic devices that are sensitive to shock and excessive loading.

- Avoid mounting the devices to an object that may be shifting or vibrating excessively. High levels of static force or acceleration may damage the housing or electronic components.
- Do not subject the devices to external loads. Do not step on them or use them as handgrips.
- Do not allow long lengths of cable to hang from the glands on the Gateway or Node. Cabling heavier than 100 grams should be supported instead of allowed to hang from the housing.
- Do not crack the housing by over-tightening the top screws. Do not exceed the maximum torque of 4 in-lbf.

It is the user's responsibility to install these devices so they will not be subject to over-voltage transients. Always ground the devices in accordance with local, state, or national regulations.

When Installing 1-Watt Radios—Notice: This equipment must be professionally installed. The output power must be limited, through the use of firmware or a hardware attenuator, when using high-gain antennas such that the +36 dBm EIRP limit is not exceeded.

4.3 Installation Quick Tips

The following are some quick tips for improving the installation of wireless network components.

4.3.1 Create a Clear Communication Path

Wireless communication is hindered by radio interference and obstructions in the path between the transmitter and receiver. To achieve the best radio performance, carefully consider the installation locations for the Gateways and Nodes and select locations without obstructions in the path.

For more information about antennas, please refer to the Antenna Basics reference guide, Banner document p/n 132113.

4.3.2 Increase the Height of the Antennas

Position the external antenna vertically for optimal radio communication. If necessary, consider changing the height of the Sure Cross radio, or its antenna, to improve reception. For outdoor applications, mounting the antenna on top of a building or pole may help achieve a line-of-sight radio link with the other radios in the network.

Figure 9. Move the antenna higher

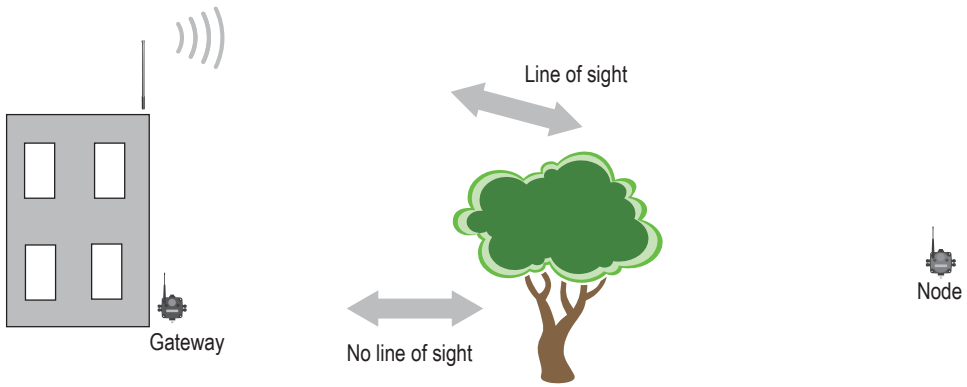

© Banner Engineering Corp. All rights reserved.
www.bannerengineering.com

4.3.3 Collocated Radios

When the radio network's client/parent radio is too close to another radio device, communication between all devices is interrupted. For this reason, always assign a unique Network ID to your wireless networks.

The network ID (NID) is a unique identifier you assign to each wireless network to minimize the chances of two collocated networks interfering with each other. Assigning different NIDs to different networks improves collocation performance in dense installations.

Do not install antennas within the minimum separation distance.

Antenna Minimum Separation Distance

900 MHz radios transmitting at ≤ 250 mW: 2 m (6 ft) with the supplied antenna

900 MHz radios transmitting at ≥ 500 mW: 4.57 m (15 ft) with the supplied antenna

2.4 GHz radios transmitting at 65 mW: 0.3 m (1 ft) with the supplied antenna

4.3.4 Be Aware of Seasonal Changes

When conducting the initial Site Survey, the fewest possible missed packets for a given link is better. However, seasonal changes may affect the signal strength and the total signal quality. Radios installed outside with 50% missed packets in the winter months may have 80% or more missed packets in the summer when leaves and trees interfere with radio reception.

Figure 10. A good signal in winter doesn't always mean you will get the same signal strength the rest of the year.

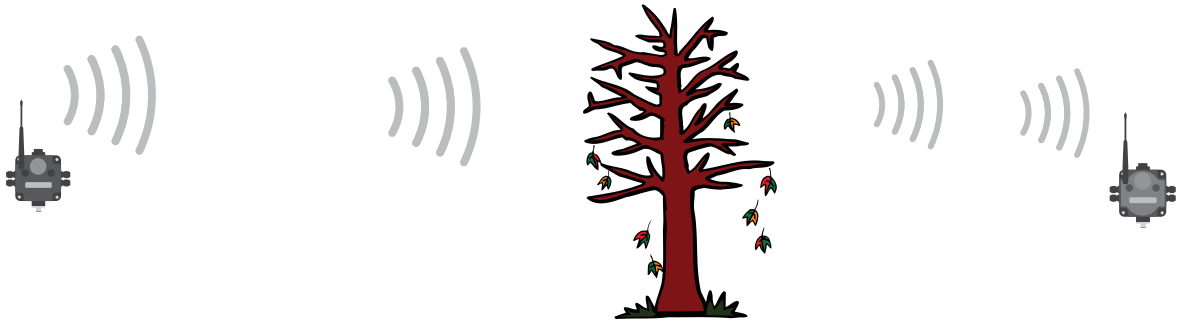

Figure 11. During spring and summer, leaves may block more of the radio signal.

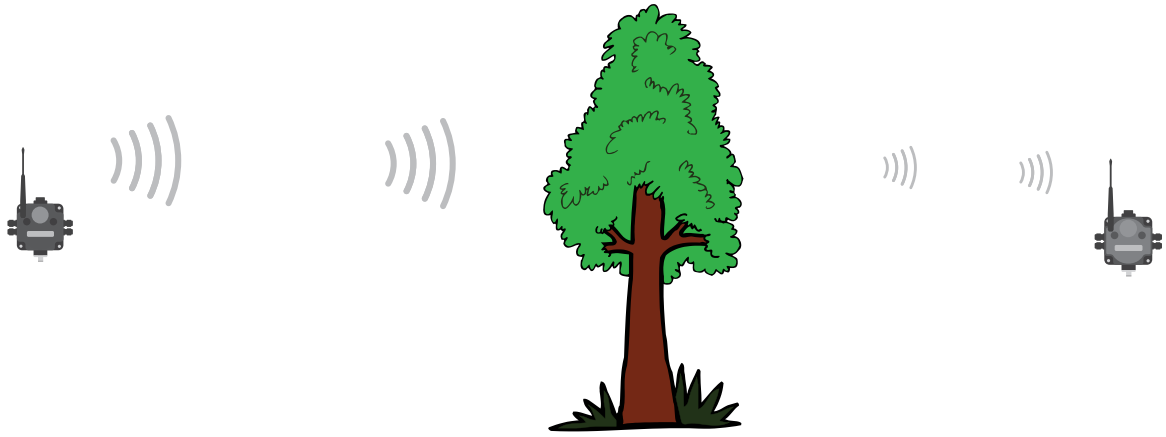

4.4 Installing a Basic Remote Antenna

A remote antenna system is any antenna system where the antenna is not connected directly to the radio; coaxial cable connects the antenna to the radio.

When installing a remote antenna system, always include a lightning arrestor or coaxial surge suppressor in the system. Remote antenna systems installed without surge protection invalidate the warranty of the radio devices.

© Banner Engineering Corp. All rights reserved.
www.bannerengineering.com

Surge suppressors should be properly grounded and mounted at ground level near where the cabling enters a building. Install the surge suppressor indoors or inside a weatherproof enclosure to minimize corrosion or component deterioration. For best results, mount the surge suppressor as close to the ground as possible to minimize the length of the ground connection and use a single-point ground system to avoid creating ground loops.

For more detailed information about how antennas work and how to install them, refer to Antenna Basics (p/n 132113.

Figure 12. Basic remote antenna components

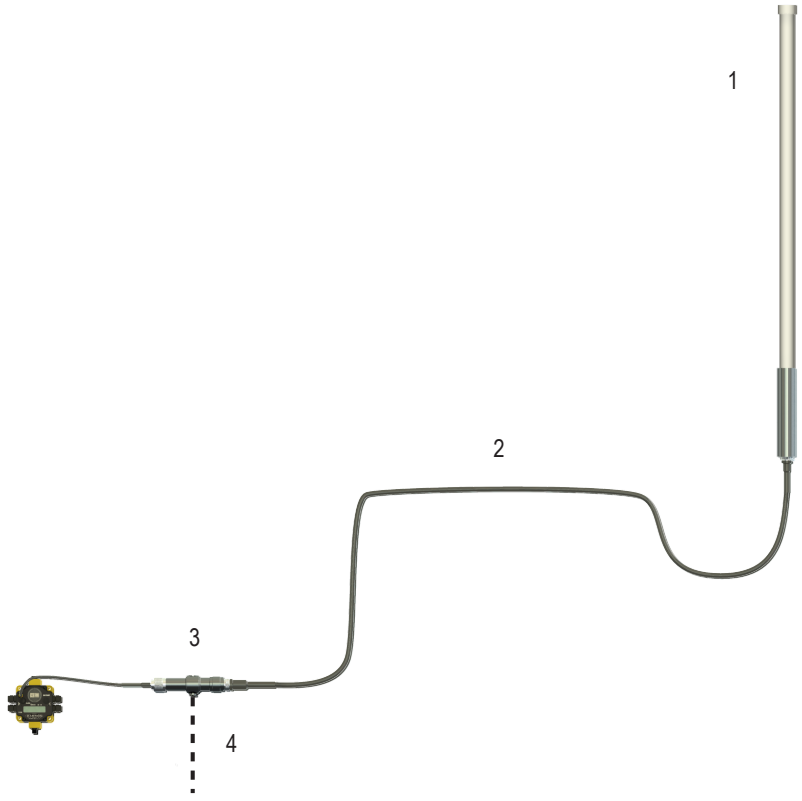

1. The antenna is mounted remotely from the radio device.
2. Coaxial cable
3. Surge suppressor
4. Ground wire to a single-point ground system

I/O Isolation—When connecting analog and discrete I/O to external equipment such as VFDs (Variable Frequency Drives), it may be appropriate to install interposing relays and/or loop isolation devices to protect the DX80 unit from transients, noise, and ground plane interference originating from devices or the environment. Contact Banner Engineering Corp. for more information.

4.4.1 Weatherproof Remote Antenna Installations

Seal the connections with rubber splicing tape and electrical tape to prevent water damage to the cable and connections.

Figure 13. Verify connections are clean

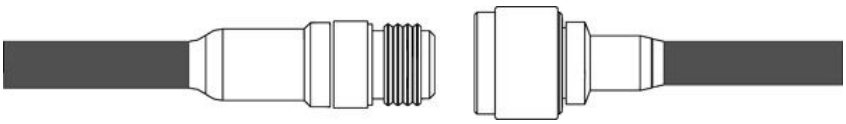

Step 1: Verify both connections are clean and dry before connecting the antenna cable to the antenna or other cable. Hand-tighten the cable connections.

© Banner Engineering Corp. All rights reserved.
www.bannerengineering.com

Figure 14. Tightly wrap the connection

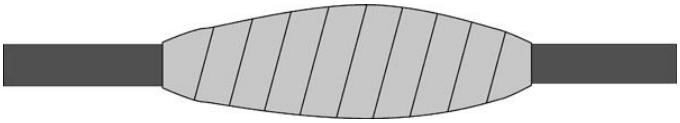

Step 2: Tightly wrap the entire connection with rubber splicing tape. Begin wrapping the rubber splicing tape one inch away from the connection and continue wrapping until you are one inch past the other end of the connection. Each new round of tape should overlap about half the previous round.

Figure 15. Use electrical tape to prevent UV damage

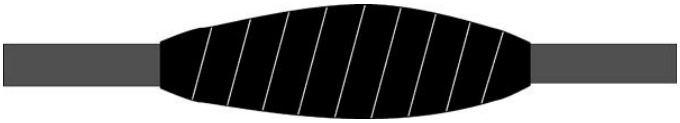

Step 3: Protect the rubber splicing tape from UV damage by tightly wrapping electrical tape on top of the rubber splicing tape. The electrical tape should completely cover the rubber splicing tape and overlap the rubber tape by one inch on each side of the connection.

4.4.2 Installing Remote Antennas

Install and properly ground a qualified surge suppressor when installing a remote antenna system. Remote antenna configurations installed without surge suppressors invalidate the manufacturer's warranty. Keep the ground wire as short as possible and make all ground connections to a single-point ground system to ensure no ground loops are created. No surge suppressor can absorb all lightning strikes; do not touch the Sure Cross® device or any equipment connected to the Sure Cross® device during a thunderstorm.

4.4.3 Mount a Dome Antenna to the Enclosure

Use a -D dome antenna when mounting an antenna directly to the outside of the enclosure.

Figure 16. Components to mount a dome antenna to an enclosure



1. Dome antenna

© Banner Engineering Corp. All rights reserved.
www.bannerengineering.com

2. DIN rail and DIN rail bracket
3. Enclosure

The -D dome antennas include an 18-inch RP-SMA extension cable connected to the antenna. Use this extension cable to connect the antenna directly to the radio.

To mount, drill a hole in the enclosure and insert the antenna.

Table 1. Omni-directional dome antenna with RP-SMA male connection

Model	Description	
BWA-9O2-D	Dome antenna, 2 dBi, 18-inch cable, 900 MHz, RP-SMA Box Mount Datasheet: b_3145121	
BWA-2O2-D	Dome antenna, 2 dBi, 18-inch cable, 2.4 GHz RP-SMA Box Mount Datasheet: b_3145115	

4.4.4 Use an N-Type, Pole-Mounted Antenna

This antenna mounts remotely from the box, with the Sure Cross® device mounted inside the box.

Ground the surge suppressor and antenna. Keep the ground wire as short as possible and make all ground connections to a single-point ground system to ensure no ground loops are created.

Figure 17. Components to mount an antenna on a pole

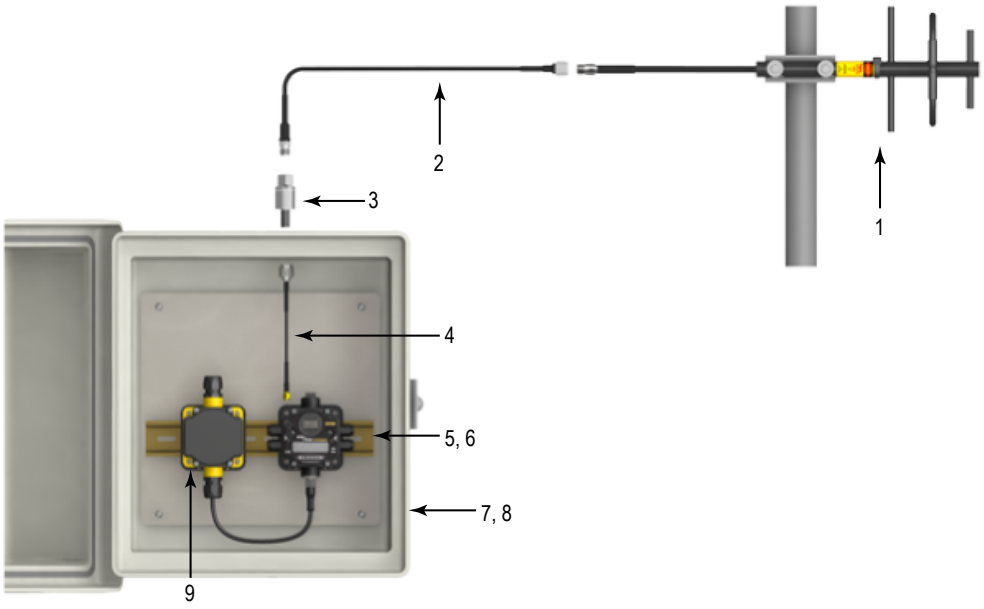

1. N-type Yagi antenna
2. N-Type to N-Type antenna cable
3. Surge suppressor
4. RP-SMA to N-Type male antenna cable
5 and 6. DIN rail and DIN rail bracket
7and 8. Enclosure and enclosure cover/plate, etc
9. Power supply

© Banner Engineering Corp. All rights reserved.
www.bannerengineering.com

Table 2. Directional (Yagi) antennas with an N-type female connection

Model	Description	
BWA-9Y6-A	6.5 dBd, 6.8 × 13 inches Outdoor, 900 MHz Datasheet: b_3145127	
BWA-9Y10-A	10 dBd, 6.8 × 24 inches Outdoor, 900 MHz Datasheet: b_3145130	

Table 3. Omni-directional fiberglass antennas with N-type female connections

Model	Description	
BWA-9O6-A	6 dBd, Fiberglass, Full wave, 71.5 inches, 900 MHz Datasheet: b_3145124	
BWA-2O8-A	8.5 dBi, Fiberglass, 24 inches, 2.4 GHz Datasheet: b_3145131	
BWA-2O6-A	6 dBi, Fiberglass, 16 inches (shown), 2.4 GHz Datasheet: b_3145117	
BWA-9O6-AS	6 dBi, Fiberglass, 1/4 Wave, 23.6 inches (1.3-inch dia.), 900 MHz Datasheet: b_3145125	
BWA-9O8-AS	8 dBi, Fiberglass, 3/4 Wave, 63 inches (1.5-inch dia.), 900 MHz Datasheet: b_3145126	

Use the LMR400 cables to connect the surge suppressor to the antenna.

Table 4. N-type to N-type cables—LMR400 type

Model	Length (m)	Description	
BWC-4MNFN3	3	LMR400 N-Type Male to N-Type Female	
BWC-4MNFN6	6		
BWC-4MNFN15	15		
BWC-4MNFN30	30		

Table 5. Surge suppressors

Model	Description	
BWC-LMRSFRPB	Surge Suppressor, Bulkhead, RP-SMA Type, RP-SMA to RP-SMA	
BWC-PRC827-DC	Surge Suppressor, bulkhead, DC Blocking, N-Type Female, N-Type Male	

Use the RP-SMA to N-Type male cables to connect the radio to the surge suppressor.

Table 6. RP-SMA to N-type cables—LMR200 type

Model	Length (m)	Description	
BWC-1MRSMN05	0.5	LMR200 RP-SMA to N-Type Male	
BWC-1MRSMN2	2		

© Banner Engineering Corp. All rights reserved.
www.bannerengineering.com

Chapter Contents

5.1 00000s Standard Physical Inputs 22
5.2 00500s Standard Physical Outputs 22
5.3 01000s Input Parameters 23
5.4 02000s Output Parameters 24
5.5 02950s Default Output Parameters 24
5.6 03000s Discrete Input Parameters 25
5.7 03300s Analog Input Parameters 25
5.8 03500s Counter Input Parameters 27
5.9 03600s H-Bridge Output Parameters 28
5.10 03700s Discrete Output Parameters 29
5.11 04000s Analog Output Parameters 29
5.12 04150s Initialization Controls 30
5.13 04400s Output Flash Pattern Parameters 30
5.14 04500s M-GAGE Parameters 30
5.15 04800s Ultrasonic Input Parameters 31
5.16 06050s Battery Monitoring Parameters 32
5.17 Configure the SDI-12 Inputs 32
5.18 Manufacturer Parameter Registers 38
5.19 Device and System Parameters 39

Chapter 5 Modbus Register Configuration

Change the factory default settings for the inputs, outputs, and device operations using the device Modbus registers. To change parameters, set the data radio network to Modbus mode and assign the data radio a valid Modbus ID.

Generic input or output parameters are grouped together based on the device input or output number: input 1, input 2, output 1 etc. Operation type specific parameters (discrete, counter, analog 4 to 20 mA) are grouped together based on the I/O type number: analog 1, analog 2, counter 1, etc. Not all inputs or outputs may be available for all models. To determine which specific I/O is available on your model, refer to the Modbus Input/Output Register Maps listed in the device's datasheet. For more information about registers, refer to the MultiHop Product Instruction Manual (p/n 151317).

5.1 00000s Standard Physical Inputs

Registers 1 through 16 are the results registers for inputs 1 through 16.

For a list of the active results registers for your MultiHop radio, refer to your product's datasheet.

5.1.1 00400s Extra Inputs

Registers 401 through 500 are the results registers for extra inputs 1 through 100.

For a list of the active results registers for your MultiHop radio, refer to your product's datasheet.

5.2 00500s Standard Physical Outputs

Registers 501 through 516 are the results registers for outputs 1 through 16.

For a list of the active results registers for your MultiHop radio, refer to your product's datasheet.

5.2.1 00900s Extra Outputs

Registers 901 through 1000 are the results registers for extra outputs 1 through 100.

For a list of the active results registers for your MultiHop radio, refer to your product's datasheet.

© Banner Engineering Corp. All rights reserved.
www.bannerengineering.com

5.3 01000s Input Parameters

Data radio inputs have the following generic parameters. These are not global parameters but are associated only with a particular input.

There are currently 16 separate inputs possible; the factory default settings are defined in the I/O specifications. Parameters for Input 1 are at 1001 through 1008. Parameters for input 2 are at 1051 through 1058. Each following input is offset from the previous one by 50 registers.

Parameter Registers for Inputs (4xxxx)									
1	2	3	4	5	6	7	8	9	Parameters
1001	1051	1101	1151	1201	1251	1301	1351	1401	Enable
1002	1052	1102	1152	1202	1252	1302	1352	1402	Sample Interval (high word)
1003	1053	1103	1153	1203	1253	1303	1353	1403	Sample Interval (low word)
1008	1058	1108	1158	1208	1258	1308	1358	1408	Out-of-Sync Enable

enable
A 1 enables the input and a 0 to disable the particular input.

out-of-sync enable
Set to one (1) to enable the input to continue operating when the device is out of sync with the client radio. Set to zero (0) to disable the input when the device is not synchronized to the client radio. The default value is one (1).

sample interval (high word)
The sample interval or sample rate is a 32-bit value (requires two Modbus registers) that represents how often the data radio samples the input. The register value is the number of time units. For example, a Modbus register value of 125 (for a 900 MHz device) represents a sample interval of 5 seconds (125 x .040 seconds = 5 seconds). A unit of time for a 900 MHz data radio is 40 milliseconds. A unit of time for a 2.4 GHz data radio is 20 milliseconds.

sample interval (low word)
See Sample Interval (High Word).

1xx4 through 1xx7
See "Switch Power Input Parameters" on page 23.

5.3.1 Switch Power Input Parameters

The switch power input parameters are not global parameters but are associated only with a particular input.

There are currently 16 separate inputs possible; the factory default settings are defined in the I/O specifications. Switch power parameters for Input 1 are at 1004 through 1007. Switch power parameters for input 2 are at 1054 through 1057. Each following input is offset from the previous one by 50 registers.

Parameter Registers for Inputs (4xxxx)									
1	2	3	4	5	6	7	8	9	Parameters
1004	1054	1104	1154	1204	1254	1304	1354	1404	Switch Power Enable
1005	1055	1105	1155	1205	1255	1305	1355	1405	Switch Power Warm-up
1006	1056	1106	1156	1206	1256	1306	1356	1406	Switch Power Voltage
1007	1057	1107	1157	1207	1257	1307	1357	1407	Extended Input Read

extended input read
The extended input read is a bit field parameter that allows multiple inputs to be sampled with the same switch power parameters. If the bit field is set to 0x000F, the first four inputs are sampled after the switch power parameters are satisfied. If this parameter is set in the input 1 configuration registers, set inputs 2 through 4 to zero.

© Banner Engineering Corp. All rights reserved.
www.bannerengineering.com

switch power enable

The bit mask can select any number of switch power outputs 1 through 4. Switch power enable works with the warm-up and voltage parameters to define the switch power output. Some devices have only two switch power outputs. Refer to your model's datasheet to confirm which switch power outputs are active for your MultiHop radio.

- 0x0 - No switch power enabled
- 0x1 - Enable SP1
- 0x2 - Enable SP2
- 0x3 - Enable SP1 and SP2
- 0x4 - Enable SP3
- 0x8 - Enable SP4
- 0xC - Enable SP3 and SP4

switch power voltage

The switch power voltage parameter defines the output voltage of the switch power output. This parameter applies only to inputs using switched power. If switch power is not used with an input, use the continuous voltage parameter to control the voltage.

Output Voltage	Parameter Value	Output Voltage	Parameter Value
0 V	255	15 V	32
5 V	204	20 V	12
7 V	125	24 V	03
10 V	69		

switch power warm-up

When the data radio supplies power to external sensors, the switch power warm-up parameter defines how long power is applied to the external sensor before the input point is examined for changes. The register value is the number of time units.

A unit of time for a 900 MHz data radio is 40 milliseconds. A unit of time for a 2.4 GHz data radio is 20 milliseconds.

5.4 02000s Output Parameters

The following characteristics are configurable for each output.

Parameters for Output 1 start at 2001 through 2004. Parameters for output 2 start at 2051 through 2054. Each following output is offset from the previous one by 50 registers.

Parameter Registers for Outputs (4xxxx)									
1	2	3	4	5	6	7	8	9	Parameters
2001	2051	2101	2151	2201	2251	2301	2351	2401	Enable
2002	2052	2102	2152	2202	2252	2302	2352	2402	Flash Output Enable
2003	2053	2103	2153	2203	2253	2303	2353	2403	Flash Index
2004	2054	2104	2154	2204	2254	2304	2354	2404	Out of Sync Enable

enable

Set to 1 to enable the output; set to 0 to disable the output.

flash index

The Flash Index can have values 1, 2, 3, or 4. For a particular output, the Flash Index 1 through 4 select a certain output pattern as defined in registers 4401, 4411, 4421, or 4431.

flash output enable

The Flash Output Enable, Flash Index, and Output Flash Pattern registers are all used to set up flashing patterns for indicator lights connected to the data radio. Set the Flash Output Enable register to 1 to enable the ability to select an output flash pattern; set to 0 to disable this feature. Select the output pattern using the Flash Index and Output Flash Pattern registers.

out of sync enable

Set to one (1) to enable the output to continue operating when the device is out of sync with the client radio. Set to zero (0) to disable the output when the device is not synchronized to the client radio. The default value is one (1).

5.5 02950s Default Output Parameters

Several device conditions may be used to send outputs to their default state. Use these properties to define the device's default output conditions.

2951 enable default out of sync

When a radio is "out of sync," it is not communicating with its parent radio.

Set this value to 1 to enable the default condition when the device is not communicating with its parent radio. Set to 0 to disable.

2952 enable default communication timeout

A communication timeout refers to the communication between the host system and this radio. Set this register to 1 to enable the default condition when the host has not communicated with this radio for the period of time defined by the communication default IO timeout.

© Banner Engineering Corp. All rights reserved.

2953 communication default I/O timeout (100 ms/count)
This parameter defines the host timeout period in 100-millisecond increments. If a host does not communicate within this timeout period, the device outputs are set to the default values.

2954 enable default on power-up
Setting this parameter to 1 sends the device outputs to their default condition when the radio is powered up. Set to 0 to disable this feature.

5.6 03000s Discrete Input Parameters

The Discrete Input Configuration parameters configure certain aspects of the data radio's discrete inputs.

Parameters for Discrete Input 1 start at 3001, and parameters for Discrete Input 2 start at 3021. Each following input is offset from the previous one by 20 registers.

Parameter Registers for Discrete Inputs (4xxxx)				
IN 1	IN 2	IN 3	IN 4	Parameters
3001	3021	3041	3061	PNP/NPN
3002	3022	3042	3062	Sample High
3003	3023	3043	3063	Sample Low
3004	3024	3044	3064	Enable Latch on Change of State
3007	3027	3047	3067	Enable Discrete Input Time Active Counter
3008	3028	3048	3068	Discrete Input Time Active Count
3009	3029	3049	3069	Discrete Input Time Active Count
3013	3033	3053	3073	Enable Rising Edge
3014	3034	3054	3074	Enable Falling Edge
3015-3016	3035-3036	3055-3056	3075-3076	Digital Counter Value

digital counter value
The 32-bit counter results are placed in registers 3015 and 3016 for input #1. To clear or preset the counter value, write a zero value or the preset value into registers 3015 and 3016. Cycling the power sets the counter values back to zero. The host system is responsible for saving the counter values in case of a power failure or power reset condition. A discrete input will not count when the device is not in sync with a parent MultiHop device. To allow for counting when out of sync, set configuration register 1008 to 1 for input #1.

Out of Sync Actions				
IN 1	IN 2	IN 3	IN 4	Description
1008	1058	1108	1158	Enable out-of-sync action. Set to 1 to enable, set to 0 to disable.

discrete input time active count
These two registers contain the counter value. Register 3xx8 contains the high portion of the active counter and 3xx9 contains the low portion of the active counter. The counter stores a time value in 100 ms increments. This value is reset to zero when the power cycles off.

enable discrete input time active counter
The time active counter counts the time a discrete input is in the active state. Set to one (1) to enable the time counter; set to zero (0) to disable the counter. By default, this counter is enabled.

enable latch onchange of state
Writing a 1 to this register causes a data "push" (data transmitted to the client radio) on change of state.

enable falling edge
Enables the sync counter falling edge. Set to 1 to enable, set to 0 to disable.

enable rising edge
Enables the sync counter rising edge. Set to 1 to enable, set to 0 to disable. To count on both rising and falling edges, set both the configuration registers to 1 to enable.

PNP or NPN
Set to 1 to define the input as a PNP (sourcing) input. Set to 0 to define the input as an NPN (sinking) input.

sample high
The default value is 0, which disables this feature. The value range is 1 through 255. The Sample High parameter refers to the number of samples (1 through 255) a discrete input must be detected high (1) before it is considered to be a change of state.

sample low
The default value of 0 disables this feature. The value range is 1 through 255. The Sample Low parameter refers to the number of samples (1 through 255) a discrete input must be detected low (0) before it is considered to be a change of state.

5.7 03300s Analog Input Parameters

The following characteristics are configurable for each of the analog inputs.

Analog input parameters for input 1 start at 3301. Analog input parameters for input 2 start at 3321. Each following input is offset from the previous one by 20 registers.

© Banner Engineering Corp. All rights reserved.
www.bannerengineering.com

Registers for Analog Parameters (4xxxx)				Parameters
IN 1 (3301-3320)	IN 2 (3321-3340)	IN 3 (3341-3360)	IN 4 (3361-3380)	
3301	3321	3341	3361	Maximum Analog Value
3302	3322	3342	3362	Minimum Analog Value
3303	3323	3343	3363	Enable Register Full Scale
3304	3324	3344	3364	Temperature Degrees C/F
3305	3325	3345	3365	Temperature Scaling
3306	3326	3346	3366	Thermocouple Type
3307	3327	3347	3367	Temperature Resolution
3308	3328	3348	3368	Threshold
3309	3329	3349	3369	Hysteresis
3310	3330	3350	3370	Delta
3311	3331	3351	3371	
3312	3332	3352	3372	
3313	3333	3353	3373	
3314	3334	3354	3374	
3315	3335	3355	3375	
3316	3336	3356	3376	Sample High
3317	3337	3357	3377	Sample Low
3318	3338	3358	3379	Change of State Push Enable
3319	3339	3359	3379	Median Filter Enable
3320	3340	3360	3380	Tau Filter

change of state push enable
Set to one (1) to enable push registers for this input. When the analog input experiences a change of state, the register value will be pushed to the client radio if this register is configured to be a push register.

delta
The delta parameter defines the change required between sample points of an analog input before the analog input reports a new value. To turn off this option, set the Delta value to 0.

enable register full scale
Set to 1 to enable a linear range from 0 to 65535 for specified input range. For a 4 to 20 mA input, a value of 0 represents 0 mA and 65535 represents 20 mA. Set this parameter to 0 to store input readings in unit-specific data. For example, the register data representing a 15.53 mA reading is 15530. For units of current (0 to 20 mA inputs), values are stored as µA (micro Amps) and voltage values are stored as mV (millivolts).

threshold and hysteresis
Threshold and hysteresis work together to establish the ON and OFF points of an analog input. The threshold defines a trigger point or reporting threshold (ON point) for a sensor input. When the input value is higher than the threshold, the input is ON. Hysteresis defines how far below the threshold the analog input is required to be before the input is considered OFF. A typical hysteresis value is 10% to 20% of the unit's range.

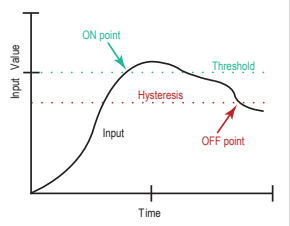

In the example shown, the input is considered on at 15 mA. To consider the input off at 13 mA, set the hysteresis to 2 mA. The input will be considered off when the value is 2 mA less than the threshold.

maximum analog value
The Maximum Value register stores the maximum allowed analog value. The specific units of measure apply to the register value. For example, the register may contain 20000, for 20 mA, or for a voltage input the register may contain 8000, for 8 volts.

median filter enable
Set to zero (0) to turn off the median filter. Set to one (1) to turn on the median filter.

minimum analog value
The Minimum Value register stores the minimum allowed analog value. The specific units of measure apply to the register value. For example, the register may contain 4000, for 4 mA, or for a voltage input the register may contain 2000, for 2 volts.

sample high-sample low (analog)
For analog inputs, the sample high parameter defines the number of consecutive samples the input signal must be above the threshold before a signal is considered active. Sample low defines the number of consecutive samples the input signal must be below the threshold minus hysteresis before a signal is considered deactivated. The sample high and sample low parameters are used to avoid unwanted input transitions.

tau filter
Set to zero (0) to turn off the tau filter. Set to 1 (weakest filter) through 6 (strongest filter) to turn on the tau filter. (In the DX80 products, the Low Pass Filter is a combination of the median filter and the tau filter.)

5.7.1 Temperature Parameters

The following parameters are used to configure analog inputs involving temperature and are typically used to configure thermocouple or RTD inputs.

© Banner Engineering Corp. All rights reserved.
www.bannerengineering.com

Registers for Analog Parameters (4xxxx)				Parameters
IN 1 (3301-3320)	IN 2 (3321-3340)	IN 3 (3341-3360)	IN 4 (3361-3380)	
3304	3324	3344	3364	Temperature Degrees C/F
3305	3325	3345	3365	Temperature Scaling
3306	3326	3346	3366	Thermocouple Type
3307	3327	3347	3367	Temperature Resolution

temperature degrees C/F
Set to 1 to represent temperature units in degrees Fahrenheit, and set to 0 (default) to represent temperature units in degrees Celsius.

temperature resolution
Thermocouples and RTDs may record temperatures in either high resolution (tenths of a degree) or low resolution (whole degree).

Write a 0 to select high resolution (default) or a 1 to select low resolution. Choosing high or low resolution changes the range of temperatures that can be written to the register.

temperature scaling
Set to 1 to store temperatures the same way as the DX80 devices (measured temp × 20) represent temperature.

Set to 0 (default) to store temperature values in tenths of a degree (measured temp × 10).

For example, if the measured temperature is 20.5 degrees, using a temperature scaling set to 1 would store the temperature value as 410; using a temperature scaling set to 0 would store the temperature as 205.

thermocouple type
Write the listed value to this register to select a thermocouple type. The default configuration is set to a Type B thermocouple (0).

Value	Thermocouple Type	Value	Thermocouple Type	Value	Thermocouple Type
0	B	5	J	10	P
1	C	6	K	11	R
2	D	7	L	12	S
3	E	8	M	13	T
4	G	9	N	14	U

5.8 03500s Counter Input Parameters

The following parameters are configurable for the counter input.

Counter input parameters for Counter Input 1 start at 3501 through 3505. Counter input parameters for Counter Input 2 start at 3521 through 3525. Each following counter input is offset from the previous one by 20 registers.

Parameter Registers for Counter Inputs (4xxxx)	
IN 1	Parameters
3501	Enable Frequency/Event Counter
3502	Enable Read Counter State
3503	Set Preset Value
3504	Counter Preset Value
3505	Counter Preset Value

counter preset value
Registers 3504 (high word) and 3505 (low word) contain the 32-bit value for presetting the counter. Write the ‘Counter Preset Value’ registers first, then use the ‘Set Preset Value’ register to execute the counter preset.

enable frequency/event counter
A counter input can be defined to calculate the frequency of the input in hertz (frequency counter) or as a counter that increments with every input change (event counter) from 0 to 1 (for PNP inputs).

Set this parameter to 1 to configure the input to calculate frequency. Set to 0 to configure the counter to count input changes, for example, an event counter or totalizer. Because the counter is reset to zero when power is cycled to the device, it is up to the host system to save count data.

enable read counter state
Manufacturing/test register only

set preset value
Writing this value to 1 signals the data radio to preset the counter with the value stored in Modbus registers 3504 and 3505. When the task is complete, the value is written to 0.

© Banner Engineering Corp. All rights reserved.
www.bannerengineering.com

5.9 03600s H-Bridge Output Parameters

The following parameters are configurable for the H-bridge outputs.

Parameters for H-bridge 1 start at 3604 through 3609. Parameters for H-bridge 2 start at 3624 through 3629. Each following H-bridge parameter set is offset from the previous one by 20 registers.

Parameter Registers for H-Bridge Outputs (4xxxx)	
H-Bridge 1	**Parameters**
3604	Enable H-Bridge
3605	H-Bridge Warmup Cap Time
3606	H-Bridge Active Current Time
3607	H-Bridge Switches
3608	H-Bridge Switches
3609	H-Bridge Booster Enabled When Active

enable H-bridge

Enable (1) or disable (0) the h-bridge inputs as needed. Disable the H-bridge inputs when using SDI-12 devices.

H-bridge active current time

Set how long, in 40 millisecond increments, the capacitor is switched into and supplying power to the solenoid circuit.

H-bridge switches

Use these two parameters as a bit mask to set the ON and OFF conditions of the h-bridge switch.

Continued from page 27

3607 Rising Switch (ON)	0	0	1	0	0	0	0	1
3608 Falling Switch (OFF)	0	0	0	1	0	0	1	0

Continued on page 29

H-bridge warm-up cap time

Similar to the switch power warm-up time, the h-bridge capacitor warm-up time is the time allotted, in 40 millisecond increments, to charge the capacitor used to activate the h-bridge and latching solenoid.

H-bridge booster enabled when active

To use this parameter, contact the applications engineers at Banner Engineering Corp. This parameter leaves the boost voltage on while the capacitor discharges into the solenoid. Although this can supply more power to the solenoid circuit, it may also brown-out the radio device.

5.9.1 03600s Switch Power Output Parameters

The Power Output Configuration parameters provide the basic operation for each power output. These parameters are not associated to specific inputs.

Efficient power management technology enables some FlexPower devices to include an internal power supply, called switch power (SP), that briefly steps up to power sensors that require more than 3.6 V DC power, such as 4 to 20 mA loop-powered sensors. When the switch power output cycles on, the voltage is stepped up to power the sensor for a specific time. The warmup time denotes how long the sensor must be powered before a reliable reading can be taken. After the warmup time has passed, the input reads the sensor, then the switch power shuts off to prolong battery life. The switch power voltage, warm-up time, and sample interval are configurable parameters.

Parameters for SP 1 start at 3601 through 3603. Parameters for SP 2 start at 3621 through 3623. Each following switch power is offset from the previous one by 20 registers.

Parameter Registers for Switch Power Outputs (4xxxx)				
SP1	**SP2**	**SP3**	**SP4**	**Parameters**
3601	3621	3641	3661	Continuous Voltage Setting
3602	3622	3642	3662	Default Output State
3603	3623	3643	3663	Hold Last State Enable

continuous voltage setting

Use this voltage parameter to set the output voltage when supplying continuous power through the SP# terminals (not associated with inputs). The continuous voltage parameter cannot be used if any input uses switch power. To set a continuous voltage on the SP output, also turn on the default output condition “default on power up.” This will turn on this continuous voltage output when the radio powers up.

Output Voltage	Parameter Value	Output Voltage	Parameter Value
0 V	255	15 V	32
5 V	204	20 V	12
7 V	125	24 V	03

Continued on page 29

© Banner Engineering Corp. All rights reserved.
www.bannerengineering.com

Continued from page 28

Output Voltage	Parameter Value	Output Voltage	Parameter Value
10 V	69		

default output state
The default output state parameter represents the default condition of the switch power output. When communication is lost to the host or the wireless link is lost for the I/O data radio, the data radio can set the outputs and switch power outputs in this default state.

When set to 0, the switch power is turned off. When set to 1, the switch power is set to the voltage established by the continuous voltage setting.

hold last state enable
Set the hold last state enable register to 1 to set the switch power output to its last known value when communications are lost.

Set this parameter to 0 to disable the host last state enable and to use the default output state settings.

5.10 03700s Discrete Output Parameters

The following characteristics are configurable for each of the discrete outputs.

Parameters for output 1 start at 3701 through 3703. Parameters for output 2 start at 3721 through 3723. Each following input is offset from the previous one by 20 registers.

Parameter Registers for Discrete Outputs (4xxxx)				
OUT 1	OUT 2	OUT 3	OUT 4	Parameters
3701	3721	3741	3761	Default Output State
3702	3722	3742	3762	Hold Last State Enable
3703	3723	3743	3763	Enable Switch Power Logic

default output state
The default output state parameter represents the default condition of the discrete output. When an error condition exists, the outputs are set to this user-defined output state, either a 0 or a 1.

enable switch power logic

hold last state enable
Set the hold last state to 1 to set the output to its last known value before the error occurred. Set this parameter to 0 to disable hold last state and use the default output state setting during an error condition.

5.11 04000s Analog Output Parameters

The following characteristics are configurable for each of the analog outputs.

Parameters for analog output 1 start at 4001 through 4005. Parameters for analog output 2 start at 4021 through 4025. Each following input is offset from the previous one by 20 registers.

Parameter Registers for Analog Outputs (4xxxx)				
OUT 1	OUT 2	OUT 3	OUT 4	Parameters
4001	4021	4041	4061	Maximum Analog Value
4002	4022	4042	4062	Minimum Analog Value
4003	4023	4043	4063	Enable Register Full-Scale
4004	4024	4044	4064	Hold Last State Enable
4005	4025	4045	4065	Default Output State

default output state
The default output state parameter represents the default condition of the analog output. When an error condition exists, the outputs are set to this 16-bit user-defined output state.

enable register full-scale
Set to 1 to enable a linear range from 0 to 65535 for the specified input range. For a 4 to 20 mA output, a value of 0 represents 4 mA and 65535 represents 20 mA. Set this parameter to 0 to store readings in unit-specific data. For example, the register data representing a 15.53 mA reading is 15530. For units of current (0 to 20 mA outputs), values are stored as µA (micro Amps) and voltage values are stored as mV (millivolts).

hold last state enable
Set the hold last state to 1 to set the output to its last known value before the error occurred. Set this parameter to 0 to disable hold last state and use the default output state setting during an error condition.

maximum analog value
The maximum analog value register stores the maximum allowed analog value. The specific units of measure apply to the register value. For example, the register may contain 20000, for 20 mA, or for a voltage output the register may contain 8000, for 8 volts.

© Banner Engineering Corp. All rights reserved.
www.bannerengineering.com

minimum analog value
The minimum analog value register stores the minimum allowed analog value. The specific units of measure apply to register value. For example, the register may contain 4000, for 4 mA, or for a voltage output the register may contain 2000, for 2 volts.

5.12 04150s Initialization Controls

4151 reset device
Write a 1 to this register to trigger a device reset of the parameters selected by the next three registers.

4152 default I/O configuration
Returns all I/O configuration parameters to their factory default settings.

4153 default system parameters
Returns all system-level parameters to their factory default settings.

4154 initialize variables from the serial number
Returns all variables that are normally calculated (or seeded) from the serial number to values seeded from the serial number.

5.13 04400s Output Flash Pattern Parameters

Setting the flash pattern establishes an on and off pattern that can be used for a discrete output or switch power.

Flash patterns are established by selecting specific timeslots to turn the output on or off. While originally the flash pattern was designed to turn on and off an indicator light, the flash pattern can be set for any discrete output or switch power. Each slot represents one frame size, which may vary from radio to radio. The default frame is 40 milliseconds. Users may configure up to four different flash patterns.

4401-4408 flash pattern index 1.

4411-4418 flash pattern index 2.

4421-4428 flash pattern index 3.

4431-4438 flash pattern index 4.

5.14 04500s M-GAGE Parameters

The following characteristics are configurable for the M-GAGE devices.

4501 set baseline
Write a 1 to this register to set the baseline. The baseline function of the M-GAGE stores the ambient magnetic field values of the X, Y, and Z axes as a baseline value. Once this baseline is established, any deviation in the magnetic field represents the presence of a ferrous object and will be reflected in the M-GAGE register. The more disruption in the magnetic field, the larger the M-GAGE register value.

4502 disable axes
A bit-wise register (0000). Write a one to disable the selected axis where bit 0 is the x axis, bit 1 is the y axis, and bit 2 is the z axis.

4503 disable compensation median filter
Write a 1 to this register to disable the compensation median filter.

4504 disable sensing median filter
Write a 1 to this register to disable the sensing median filter.

4505 low pass filter
The filters T0 through T6 are parameter settings that define the degree of input digital signal filtering for analog inputs. T0 is the least amount of filtering. T6 is the highest filter setting and has the least fluctuation between readings. Write the following values to select a low pass (tau) filter.

Low Pass (Tau) Filter	Register Value	Low Pass (Tau) Filter	Register Value
T0	0	T4	4
T1	1	T5	5
T2	2	T6	6
T3	3		

4506 sample high
The sample high counter parameter defines the number of consecutive samples the input signal must be above the threshold before a signal is considered active. The default value is 0, which disables this feature. The value range is 1 through 255. The Sample High parameter refers to the number of samples (1 through 255) a discrete input must be detected high (1) before it is considered to be a change of state.

4507 sample low
The default value of 0 disables this feature. The value range is 1 through 255. The Sample Low parameter refers to the number of samples (1 through 255) a discrete input must be detected low (0) before it is considered to be a change of state.

© Banner Engineering Corp. All rights reserved.
www.bannerengineering.com

4509 delta
Rate of change filter.

4510 threshold and 4511 hysteresis
Threshold and hysteresis work together to establish the ON and OFF points of an analog input. The threshold defines a trigger point or reporting threshold (ON point) for the M-GAGE™ input. The hysteresis value establishes how much below the active threshold (ON point) an analog input is required to be before the input is considered OFF. A typical hysteresis value is 10% to 20% of the unit's range.

The M-GAGE's threshold and hysteresis ranges are 0 to 65,535.

The factory default threshold setting is 150 and the default hysteresis is 30 (the sensor detects an OFF condition at threshold minus hysteresis, or 150 - 30 = 120). With the default settings, once the magnetic field reading is above 150, an ON or "1" is stored in the lowest significant bit (LSB) in the Modbus register. When the M-GAGE reading drops below the OFF point (threshold minus hysteresis), the LSB of the Modbus register is set to "0."

To determine your threshold, take M-GAGE readings of the test objects at the distance they are likely to be from the sensor. For example, if a car reads 150, a bicycle 15, and a truck reads 250, setting the threshold to 200 will detect only trucks of a specific size. Magnetic field fluctuations vary based on the amount of ferrous metal present and the distance from the sensor.

4512 baseline (drift) filter time
Baseline filter time. When the baseline filter is on and the magnetic field readings are below the baseline filter threshold setting, an algorithm is used to slowly match the device's baseline to the current ambient magnetic field. This helps to account for the natural fluctuations in the magnetic field.

4513 baseline (drift) filter threshold
Baseline filter threshold is used with the baseline filter time to account for the natural fluctuations on the magnetic field.

4514 baseline (drift) filter tau
Baseline filter's low-pass filter.

4521 baseline difference signal value total
A combination of the x-, y-, and z-axis baseline different signal values.

4522–4524 baseline difference signal value [x-axis]
4522 [x-axis]—The difference between the ambient magnetic field and the current magnetic field reading for the x-axis.

4523 [y-axis]—The difference between the ambient magnetic field and the current magnetic field reading for the y-axis.

4524 [z-axis]—The difference between the ambient magnetic field and the current magnetic field reading for the z-axis.

4525–4527 baseline value
4525 [x-axis]—Ambient magnetic field reading for the x-axis.

4526 [y-axis]—Ambient magnetic field reading for the y-axis.

4527 [z-axis]—Ambient magnetic field reading for the z-axis.

4528–4530 raw signal value
4528 [x-axis]—The actual magnetic field reading for the x-axis.

4529 [y-axis]—The actual magnetic field reading for the y-axis.

4530 [z-axis]—The actual magnetic field reading for the z-axis.

5.15 04800s Ultrasonic Input Parameters

The following characteristics are configurable for the ultrasonic input devices.

0001 temperature measured
Temperature is measured in 0.1 °C increments.

0002 distance measured
Distance is measured in mm.

The least significant bit indicates the threshold status
Value 65535 or 65534: Alarm, No Reflection Detected
Value 65533 or 65532: Alarm, Reflection Mismatch
Value 65531 or 65530: Alarm, Thermistor Error

1051 enable
Write a 1 to enable the ultrasonic sensor. Write a 0 to disable.

1053 sample interval or sample rate
The sample interval (rate) defines how often the data radio samples the input. The register value is the number of time units. For example, a Modbus register value of 125 (for a 900 MHz device) represents a sample interval of 5 seconds (125 × 0.040 seconds = 5 seconds).

A unit of time for a 900 MHz data radio is 40 milliseconds. A unit of time for a 2.4 GHz data radio is 20 milliseconds.

4801 drive pulses
Defines the number of cycles the transducer is pulsed.

4808 receive pulses
Defines the number of cycles that must be seen to recognize a reflection.

4810 max scale value
The Maximum Value register stores the maximum allowed analog value. The specific units of measure apply to the register value. For example, the register may contain 20000, for 20 mA, or for a voltage input the register may contain 8000, for 8 volts.

4811 min scale value
The Minimum Value register stores the minimum allowed analog value. The specific units of measure apply to the register value. For example, the register may contain 4000, for 4 mA, or for a voltage input the register may contain 2000, for 2 volts.

4812 enable register full scale
Set to 1 to enable a linear range from 0 to 65535 for specified input range. For a 4 to 20 mA input, a value of 0 represents 0 mA and 65535 represents 20 mA. Set this parameter to 0 to store input readings in unit-specific data. For example, the register data representing a 15.53 mA reading is 15530. For units of current (0 to 20 mA inputs), values are stored as µA (micro Amps) and voltage values are stored as mV (millivolts).

4813 threshold and 4814 hysteresis
Threshold and hysteresis work together to establish the ON and OFF points of an analog input. The threshold defines a trigger point or reporting threshold (ON point) for a sensor input. When the input value is higher than the threshold, the input is ON. Hysteresis defines how far below the threshold the analog input is required to be before the input is considered OFF. A typical hysteresis value is 10% to 20% of the unit's range.

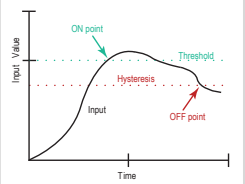

In the example shown, the input is considered on at 15 mA. To consider the input off at 13 mA, set the hysteresis to 2 mA. The input will be considered off when the value is 2 mA less than the threshold.

© Banner Engineering Corp. All rights reserved.
www.bannerengineering.com

4815 delta
The delta parameter defines the change required between sample points of an analog input before the analog input reports a new value. To turn off this option, set the Delta value to 0.

4816 sample high and 4817 sample low
For discrete inputs, the sample high parameter defines the number of consecutive samples the input signal must be high before a signal is considered active. Sample low defines the number of consecutive samples the input signal must be low before a signal is considered low. The sample high and sample low parameters are used to create a filter to avoid unwanted input transitions. The default value is 0, which disables this feature. The value range is 1 through 255.

4818 change of state push enable
Set to one (1) to enable push registers for this input. When the analog input experiences a change of state, the register value will be pushed to the client radio if this register is configured to be a push register.

4819 median filter enable
Set to zero (0) to turn off the median filter. Set to one (1) to turn on the median filter.

4820 low pass (tau) filter
Set to zero (0) to turn off the tau filter. Set to 1 (weakest filter) through 6 (strongest filter) to turn on the tau filter. (In the DX80 products, the Low Pass Filter is a combination of the median filter and the tau filter.) Write the following values to select a low pass (tau) filter.

Low Pass (Tau) Filter	Register Value	Low Pass (Tau) Filter	Register Value
T0	0	T4	4
T1	1	T5	5
T2	2	T6	6
T3	3		

4823 window range
Measured in mm.

When ultrasonic TEACH is active, the threshold is set to the distance measured minus the window range.

4825 ultrasonic TEACH
Write a 1 to initiate a threshold teach.

When ultrasonic TEACH is active, the threshold is set to the distance measured minus the window range.

4826 invert digital logic
If the set distance measures below the threshold, the transition has an LSB of 1.

If the clear distance measures below the threshold, the transition has an LSB of 0.

4827 boost (boost voltage) enable
Controls the ultrasonic transducer power level.

Set to 0 for low power level, a longer battery life, less noise, and a shorter range.
Set to 1 for higher power levels, a shorter battery life, more noise, and a longer range.

4828 ultrasonic sensitivity control
Adjusts ultrasonic reflection sensitivity.

Write a 0 to disables the control feature
Start control at 0x8000 to match default
Control below 0x8000 is more sensitive
Control above 0x8000 is less sensitive

4831 set alarm as logic 0
If set, an alarm is treated is if it is below the threshold.

If cleared, an alarm is treated is if it is above the threshold.

7909-7912 push registers
7909 Push register 1 — Pushes the value of register 0002 (distance measured).

7910 Push register 2 — Pushes the value of register 0001 (temperature in 0.1 °C increments).

7911 Push register 3 — Pushes the value of register 4813 (current threshold setting).

7912 Push register 4 — Pushes the value of register 4823 (current teach window range).

5.16 06050s Battery Monitoring Parameters

Use the battery monitor parameters to monitor and set a threshold based on the incoming device voltage (on some models).

The incoming voltage is approximately 3.6 V DC from a battery input or 4.2 V DC from the 10 to 30 V DC input. These parameters allow users to determine which power source is powering the MultiHop device.

6051 enable battery read
Set to zero to disable the battery read function. Set to 1 to enable the battery read function.

6052 battery read sample interval
Use this parameter to set the time interval at which the incoming voltage is read. Sample interval (in seconds) = 0.040 seconds × 2^RegValue. Default register value: 9 (20 seconds).

6053 battery voltage threshold
Use this parameter to define the incoming voltage threshold at which register 44061 will be set to a zero or one. Set this value in number of 100 mA increments. The default value is 38 (or 3.8 V).

6054 hardware reference select
Use this parameter to allow for the correct calibration reference for different hardware platforms. Set to zero for 3.0 V PCB Vcc. Set to one for 3.3 V PCB Vcc. Default value is zero.

6061 battery threshold reading
When zero (0), the incoming voltage is below the threshold defined by parameter 6053 (powered by battery). When one (1), the incoming voltage reading is above the defined threshold (powered by a solar panel or 10 to 30 V dc).

6062 battery voltage reading
Actual incoming voltage reading in units of 100 mV.

5.17 Configure the SDI-12 Inputs

The SDI-12 interface on the MultiHop radio can support up to five devices with (12) 32-bit register values each. The radio's SDI-12 interface can be configured to increase the number of registers per device address for devices with large register sets. The factory default enables one SDI-12 device using device address 1 with up to nine registers with a SDI-12 command of "M!".

© Banner Engineering Corp. All rights reserved.
www.bannerengineering.com

Configure the MultiHop device by writing to non-volatile Modbus registers with configuration parameters. Read or write the device configuration parameters using standard Modbus commands.

5.17.1 Basic SDI-12 Interface Parameters

Up to five devices/commands can be accessed using the SDI-12 interface. There are three parameters for each device/command: Enable, Device Address, Device Command. For more information, refer to the SDI-12 Technical Notes.

enable. Instructs the MultiHop Data Radio device to activate or deactivate the SDI-12 device. Write a 1 to enable, and write a 0 to disable. The factory default for device 1 is enabled; devices 2 through 5 are disabled.

device address. Each SDI-12 device must have a unique device address. This parameter is the ASCII code for the device address. Valid device addresses are `0–9` and `a–z` that map to ASCII codes `48–57` and `97–122`, respectively. The factory default addresses are:

- SDI-12 Device 0 uses ASCII code 48
- SDI-12 Device 1 uses ASCII code 49
- SDI-12 Device 2 uses ASCII code 50
- SDI-12 Device 3 uses ASCII code 51
- SDI-12 Device 4 uses ASCII code 52

device command The SDI-12 interface supports "M!" or "C!" commands. Use the Device Command parameter to define which command to use for this device. The factory default is "M!" commands for all devices (value of 10 in the Modbus register).

Table 7. Supported M! commands

SDI-12 Command	Register Value	SDI-12 Command	Register Value
xM!	0 or 10	xM5!	15
xM1!	11	xM6!	16
xM2!	12	xM7!	17
xM3!	13	xM8!	18
xM4!	14	xM9!	19

Table 8. Supported C! commands

SDI-12 Command	Register Value	SDI-12 Command	Register Value
xC!	1 or 20	xC5!	25
xC1!	21	xC6!	26
xC2!	22	xC7!	27
xC3!	23	xC8!	28
xC4!	24	xC9!	29

The Modbus configuration registers are listed. All registers are defined as Modbus holding registers. The factory default values are shown in parentheses. All values are in decimal unless noted otherwise.

Device/CMD Configuration	Registers (Default Value)		
	Enable	Device Address	Device Command
SDI-12 Device/CMD 1	1751 (1)	11001 (48) [2]	11002 (10)
SDI-12 Device/CMD 2	1701 (0)	11201 (49)	11202 (10)
SDI-12 Device/CMD 3	1651 (0)	11401 (50)	11402 (10)
SDI-12 Device/CMD 4	1601 (0)	11601 (51)	11602 (10)
SDI-12 Device/CMD 5	1551 (0)	11801 (52)	11802 (10)

5.17.2 Result Registers Configuration Parameters

There are 12 result registers allocated for each device, and each register can be individually configured to change its formatting. Use these parameters to customize the formatting for each data value coming from a SDI-12 device.

The default configuration of a floating point format works for most SDI-12 values. For each register the following parameters apply:

[2] The default device addresses 48 through 52 are in ASCII.

© Banner Engineering Corp. All rights reserved.
www.bannerengineering.com

enable

Enable or disable for each device. To enable, set to 1. To disable, set to 0.

decimal point move

Moves the decimal point 0 to 7 places.

decimal point direction

To move the decimal point to the right, set to 0. To move the decimal point to the left, set to 1.

register sign

For an unsigned value, set to 0. For a signed value, set to 1.

register size

For a 16-bit word, set to 0. For a 32-bit word, set to 1. Select 32-bit when using floating point.

floating point enable

For an integer, set to 0. For a floating point number, set to 1.

The following tables define the Modbus configuration registers for the result registers. All registers are defined to be Modbus holding registers. The default values are shown in parentheses; factory defaults enable the first nine registers as floating-point registers. The "M!" command only supports a maximum of nine registers.

SDI-12 Device 1 / CMD 1	Register 1	Register 2	Register 3	Register 4	Register 5	Register 6
Result Register Enable	11011 (1)	11021 (1)	11031 (1)	11041 (1)	11051 (1)	11061 (1)
Decimal Point Move	11012 (0)	11022 (0)	11032 (0)	11042 (0)	11052 (0)	11062 (0)
Decimal Point Direction	11013 (0)	11023 (0)	11033 (0)	11043 (0)	11053 (0)	11063 (0)
Register Sign	11014 (0)	11024 (0)	11034 (0)	11044 (0)	11054 (0)	11064 (0)
Register Size	11015 (1)	11025 (1)	11035 (1)	11045 (1)	11055 (1)	11065 (1)
Floating Point Enable	11016 (1)	11026 (1)	11036 (1)	11046 (1)	11056 (1)	11066 (1)
	Register 7	**Register 8**	**Register 9**	**Register 10**	**Register 11**	**Register 12**
Result Register Enable	11071 (1)	11081 (1)	11091 (1)	11141 (0)	11151 (0)	11161 (0)
Decimal Point Move	11072 (0)	11082 (0)	11092 (0)	11142 (0)	11152 (0)	11162 (0)
Decimal Point Direction	11073 (0)	11083 (0)	11093 (0)	11143 (0)	11153 (0)	11163 (0)
Register Sign	11074 (0)	11084 (0)	11094 (0)	11144 (0)	11154 (0)	11164 (0)
Register Size	11075 (1)	11085 (1)	11095 (1)	11145 (1)	11155 (1)	11165 (1)
Floating Point Enable	11076 (1)	11086 (1)	11096 (1)	11146 (1)	11156 (1)	11166 (1)

SDI-12 Device 2 / CMD 2	Register 1	Register 2	Register 3	Register 4	Register 5	Register 6
Result Register Enable	11211 (1)	11221 (1)	11231 (1)	11241 (1)	11251 (1)	11261 (1)
Decimal Point Move	11212 (0)	11222 (0)	11232 (0)	11242 (0)	11252 (0)	11262 (0)
Decimal Point Direction	11213 (0)	11223 (0)	11233 (0)	11243 (0)	11253 (0)	11263 (0)
Register Sign	11214 (0)	11224 (0)	11234 (0)	11244 (0)	11254 (0)	11264 (0)
Register Size	11215 (1)	11225 (1)	11235 (1)	11245 (1)	11255 (1)	11265 (1)
Floating Point Enable	11216 (1)	11226 (1)	11236 (1)	11246 (1)	11256 (1)	11266 (1)
	Register 7	**Register 8**	**Register 9**	**Register 10**	**Register 11**	**Register 12**
Result Register Enable	11271 (1)	11281 (1)	11291 (1)	11341 (0)	11351 (0)	11361 (0)
Decimal Point Move	11272 (0)	11282 (0)	11292 (0)	11342 (0)	11352 (0)	11362 (0)
Decimal Point Direction	11273 (0)	11283 (0)	11293 (0)	11343 (0)	11353 (0)	11363 (0)

Continued on page 35

© Banner Engineering Corp. All rights reserved.

Continued from page 34

SDI-12 Device 2 / CMD 2	Register 1	Register 2	Register 3	Register 4	Register 5	Register 6
Register Sign	11274 (0)	11284 (0)	11294 (0)	11344 (0)	11354 (0)	11364 (0)
Register Size	11275 (1)	11285 (1)	11295 (1)	11345 (1)	11355 (1)	11365 (1)
Floating Point Enable	11276 (1)	11286 (1)	11296 (1)	11346 (1)	11356 (1)	11366 (1)

SDI-12 Device 3 / CMD 3	Register 1	Register 2	Register 3	Register 4	Register 5	Register 6
Result Register Enable	11411 (1)	11421 (1)	11431 (1)	11441 (1)	11451 (1)	11461 (1)
Decimal Point Move	11412 (0)	11422 (0)	11432 (0)	11442 (0)	11452 (0)	11462 (0)
Decimal Point Direction	11413 (0)	11423 (0)	11433 (0)	11443 (0)	11453 (0)	11463 (0)
Register Sign	11414 (0)	11424 (0)	11434 (0)	11444 (0)	11454 (0)	11464 (0)
Register Size	11415 (1)	11425 (1)	11435 (1)	11445 (1)	11455 (1)	11465 (1)
Floating Point Enable	11416 (1)	11426 (1)	11436 (1)	11446 (1)	11456 (1)	11466 (1)
	Register 7	**Register 8**	**Register 9**	**Register 10**	**Register 11**	**Register 12**
Result Register Enable	11471 (1)	11481 (1)	11491 (1)	11541 (0)	11551 (0)	11561 (0)
Decimal Point Move	11472 (0)	11482 (0)	11492 (0)	11542 (0)	11552 (0)	11562 (0)
Decimal Point Direction	11473 (0)	11483 (0)	11493 (0)	11543 (0)	11553 (0)	11563 (0)
Register Sign	11474 (0)	11484 (0)	11494 (0)	11544 (0)	11554 (0)	11564 (0)
Register Size	11475 (1)	11485 (1)	11495 (1)	11545 (1)	11555 (1)	11565 (1)
Floating Point Enable	11476 (1)	11486 (1)	11496 (1)	11546 (1)	11556 (1)	11566 (1)

SDI-12 Device 4 / CMD 4	Register 1	Register 2	Register 3	Register 4	Register 5	Register 6
Result Register Enable	11611 (1)	11621 (1)	11631 (1)	11641 (1)	11651 (1)	11661 (1)
Decimal Point Move	11612 (0)	11622 (0)	11632 (0)	11642 (0)	11652 (0)	11662 (0)
Decimal Point Direction	11613 (0)	11623 (0)	11633 (0)	11643 (0)	11653 (0)	11663 (0)
Register Sign	11614 (0)	11624 (0)	11634 (0)	11644 (0)	11654 (0)	11664 (0)
Register Size	11615 (1)	11625 (1)	11635 (1)	11645 (1)	11655 (1)	11665 (1)
Floating Point Enable	11616 (1)	11626 (1)	11636 (1)	11646 (1)	11656 (1)	11666 (1)
	Register 7	**Register 8**	**Register 9**	**Register 10**	**Register 11**	**Register 12**
Result Register Enable	11671 (1)	11681 (1)	11691 (1)	11741 (0)	11751 (0)	11761 (0)
Decimal Point Move	11672 (0)	11682 (0)	11692 (0)	11742 (0)	11752 (0)	11762 (0)
Decimal Point Direction	11673 (0)	11683 (0)	11693 (0)	11743 (0)	11753 (0)	11763 (0)
Register Sign	11674 (0)	11684 (0)	11694 (0)	11744 (0)	11754 (0)	11764 (0)
Register Size	11675 (1)	11685 (1)	11695 (1)	11745 (1)	11755 (1)	11765 (1)
Floating Point Enable	11676 (1)	11686 (1)	11696 (1)	11746 (1)	11756 (1)	11766 (1)

SDI-12 Device 5 / CMD 5	Register 1	Register 2	Register 3	Register 4	Register 5	Register 6
Result Register Enable	11811 (1)	11821 (1)	11831 (1)	11841 (1)	11851 (1)	11861 (1)
Decimal Point Move	11812 (0)	11822 (0)	11832 (0)	11842 (0)	11852 (0)	11862 (0)
Decimal Point Direction	11813 (0)	11823 (0)	11833 (0)	11843 (0)	11853 (0)	11863 (0)

Continued on page 36

© Banner Engineering Corp. All rights reserved.
www.bannerengineering.com

Continued from page 35

SDI-12 Device 5 / CMD 5	Register 1	Register 2	Register 3	Register 4	Register 5	Register 6
Register Sign	11814 (0)	11824 (0)	11834 (0)	11844 (0)	11854 (0)	11864 (0)
Register Size	11815 (1)	11825 (1)	11835 (1)	11845 (1)	11855 (1)	11865 (1)
Floating Point Enable	11816 (1)	11826 (1)	11836 (1)	11846 (1)	11856 (1)	11866 (1)
	Register 7	**Register 8**	**Register 9**	**Register 10**	**Register 11**	**Register 12**
Result Register Enable	11871 (1)	11881 (1)	11891 (1)	11941 (0)	11951 (0)	11961 (0)
Decimal Point Move	11872 (0)	11882 (0)	11892 (0)	11942 (0)	11952 (0)	11962 (0)
Decimal Point Direction	11873 (0)	11883 (0)	11893 (0)	11943 (0)	11953 (0)	11963 (0)
Register Sign	11874 (0)	11884 (0)	11894 (0)	11944 (0)	11954 (0)	11964 (0)
Register Size	11875 (1)	11885 (1)	11895 (1)	11945 (1)	11955 (1)	11965 (1)
Floating Point Enable	11876 (1)	11886 (1)	11896 (1)	11946 (1)	11956 (1)	11966 (1)

5.17.3 SDI-12 Device Result Registers

The result registers store all information received from the SDI-12 devices.

The registers are 16-bit registers and require two registers to store a 32-bit value. The factory default configuration defines the result registers as 32-bit registers, floating point format, and the first nine result registers are enabled for use. A host system reads the SDI-12 device data from these registers.

Result Registers	Register 1	Register 2	Register 3	Register 4	Register 5	Register 6
SDI-12 Device/CMD 1 Result Upper	11101	11103	11105	11107	11109	11111
SDI-12 Device/CMD 1 Result Lower	11102	11104	11106	11108	11110	11112
SDI-12 Device/CMD 2 Result Upper	11301	11303	11305	11307	11309	11311
SDI-12 Device/CMD 2 Result Lower	11302	11304	11306	11308	11310	11312
SDI-12 Device/CMD 3 Result Upper	11501	11503	11505	11507	11509	11511
SDI-12 Device/CMD 3 Result Lower	11502	11504	11506	11508	11510	11512
SDI-12 Device/CMD 4 Result Upper	11701	11703	11705	11707	11709	11711
SDI-12 Device/CMD 4 Result Lower	11702	11704	11706	11708	11710	11712
SDI-12 Device/CMD 5 Result Upper	11901	11903	11905	11907	11909	11911
SDI-12 Device/CMD 5 Result Lower	11902	11904	11906	11908	11910	11912

Result Registers	Register 7	Register 8	Register 9	Register 10	Register 11	Register 12
SDI-12 Device/CMD 1 Result Upper	11113	11115	11117	11119	11121	11123
SDI-12 Device/CMD 1 Result Lower	11114	11116	11118	11120	11122	11124
SDI-12 Device/CMD 2 Result Upper	11313	11315	11317	11319	11321	11323
SDI-12 Device/CMD 2 Result Lower	11314	11316	11318	11320	11322	11324
SDI-12 Device/CMD 3 Result Upper	11513	11515	11517	11519	11521	11523
SDI-12 Device/CMD 3 Result Lower	11514	11516	11518	11520	11522	11524
SDI-12 Device/CMD 4 Result Upper	11713	11715	11717	11719	11721	11723
SDI-12 Device/CMD 4 Result Lower	11714	11716	11718	11720	11722	11724
SDI-12 Device/CMD 5 Result Upper	11913	11915	11917	11919	11921	11923
SDI-12 Device/CMD 5 Result Lower	11914	11916	11918	11920	11922	11924

5.17.4 SDI-12 Device Settings

The following are generic sampling, power, and warmup parameters that should work for all SDI-12 devices. See the tested device table below. In most cases, parameters will not need to be adjusted but if needed there are three common SDI-12 device parameters that control the communications and power of the SDI-12 device. Contact Banner Engineering Corp support for more guidance.

© Banner Engineering Corp. All rights reserved.
www.bannerengineering.com

sample rate

Formed using two 16-bit parameters, a HI word and a LOW word. The sample rate is how often the SDI-12 device is powered up, then interrogated for data. The value in the registers is the number of 0.040 second counts. For example, the default values are HI word (1) and LOW word (24,464), which after combining the words in hexadecimal will calculate to 90,000 × 0.040 seconds. Adjusting this value affects the battery life.

warmup time

Amount of time to wait, in 0.040 second increments, from powering on the device to the time to send communications to the device. The default value is 200, or 200 × 0.040 seconds. Adjusting this value affects the battery life.

voltage

The default voltage setting is approximately 6.7 volts or a register value of 148. Adjusting this value affects the battery life.

	Registers (Default Value)							
Device / Cmd Configuration	Enable	Device Address	Switch Power Enable	Device Command	Sample Hi	Sample Low	Warmup Time	Voltage
SDI-12 Device/CMD 1	1751 (1)	11001 (48) (3)	1754 (4)	11002 (10)	1752 (1)	1753 (24464)	1755 (200)	1756 (148)
SDI-12 Device/CMD 2	1701 (0)	11201 (49)	1704 (4)	11202 (10)	1702 (1)	1703 (24464)	1705 (200)	1706 (148)
SDI-12 Device/CMD 3	1651 (0)	11401 (50)	1654 (4)	11402 (10)	1652 (1)	1653 (24464)	1655 (200)	1656 (148)
SDI-12 Device/CMD 4	1601 (0)	11601 (51)	1604 (4)	11602 (10)	1602 (1)	1603 (24464)	1605 (200)	1606 (148)
SDI-12 Device/CMD 5	1551 (0)	11801 (52)	1554 (4)	11802 (10)	1552 (1)	1553 (24464)	1555 (200)	1556 (148)

These SDI-12 probes have been tested and are functional with the factory default settings.

MFG	Models	Technical Note
Acclima	SEN-SDI (TDT SDI-12 Soil Moisture Sensor)	SDI-12 and the Acclima TDT SDI-12 Soil Moisture Probe (p/n b_4182040)
Adcon Telemetry	HydraProbeII	
AquaCheck	Sub-surface Probe	SDI-12 and the AquaCheck Sub-Surface Soil Moisture Probe (p/n b_4182041)
Decagon	MPS-2, MPS-6, 5TE, TS1, T8	SDI-12 and the Decagon 5TE Soil Moisture Probe (p/n b_4182042) SDI-12 and the Decagon GS3 Soil Moisture Probe (p/n b_4182043) SDI-12 and the Decagon MPS-2 Soil Moisture Probe (p/n b_4182044)
HSTI	HydraScout	SDI-12 and the HydraScout HSTI Probe (p/n b_4182045)
Sentek	EnviroSCAN	SDI-12 and the Sentek EnviroScan Soil Moisture Probe (p/n b_4182046)

5.17.5 Configuring for Acclima SDI-12 Sensors

Table 9. Acclima SDI-12 Parameter Registers

SDI-12 Device Register (Acclima)		Register Enable (1)	Decimal Point Move (0-7)	Move Right (0) or Left (1)	Signed (1) or Unsigned (0)	16 bit (0) or 32 bit (1)
1	Volumetric water content	ON	2	Left	Unsigned	32 bit
2	Temperature	ON	1	Left	Signed	32 bit
3	Soil Permittivity	ON	2	Left	Unsigned	32 bit
4	Soil Conductivity	ON	2	Left	Unsigned	32 bit

Table 10. Acclima SDI-12 Results Registers

Acclima Register No.		Results Registers (high:low)	Integer Conversion Multiplier	Sample Reading	Actual Value
1	Volumetric water content	11101:11102	×100	0:124	1.24%
2	Temperature	11103:11104	×10	0:238	23.8 °C
3	Soil Permittivity	11105:11106	×100	0:402	4.02
4	Soil Conductivity	11107:11108	×100	0:123	1.23 dS/m

(3) The default device addresses 48 through 52 are in ASCII.

© Banner Engineering Corp. All rights reserved.
www.bannerengineering.com

5.17.6 Configuring for Decagon 5T3 SDI-12 Sensors

Table 11. Decagon SDI-12 Parameter Registers

SDI-12 Device Register (Decagon 5T3)		Register Enable (1)	Decimal Point Move (0-7)	Move Right (0) or Left (1)	Signed (1) or Unsigned (0)	16 bit (0) or 32 bit (1)
1	Volumetric water content	ON	2	Left	Unsigned	32 bit
2	Soil Conductivity	ON	2	Left	Unsigned	32 bit
3	Temperature	ON	1	Left	Signed	32 bit

Table 12. Decagon SDI-12 Results Registers

Decagon Register No.		Results Registers (high:low)	Integer Conversion Multiplier	Sample Reading	Actual Value
1	Volumetric water content	11101:11102	×100	0:124	1.24%
2	Soil Conductivity	11103:11104	×100	0:123	1.23 dS/m
3	Temperature	11105:11106	×10	0:238	23.8 °C

5.18 Manufacturer Parameter Registers

The following are the device-specific and manufacturer parameters for the MultiHop radio devices. These registers are all within the 4xxxx range.

Strings stored in ASCII format are read as two characters per Modbus register. The lower-numbered Modbus register contains the right-most characters in the string. Within a given Modbus register, the upper byte contains the ASCII character that goes to the right of the character in the lower byte.

Table 13. 04100s Manufacturing Information

Address (4xxxx)	Name	Format
4101–4104	Serial number, digits 1–8	ASCII, read only
4111–4113	Model number, digits 1–6	ASCII, read only
4121–4123	Production date, digits 1–6	ASCII, read only

Table 14. 04200s Device Name

Address (4xxxx)	Name	Format
4201–4209	Name characters 1-18	ASCII

Table 15. 04300s Software Information

Address (4xxxx)	Name	Format
4301–4303	RF firmware p/n	ASCII, read only
4304–4305	RF firmware version	ASCII, read only
4306–4308	RF EEPROM part number, digits 1–6	ASCII, read only
4309–4310	RF EEPROM version number, characters 1–3	ASCII, read only
4311–4313	LCD firmware p/n	ASCII, read only
4314–4315	LCD firmware version	ASCII, read only
4316–4318	LCD EEPROM part number, digits 1–6	ASCII, read only
4319–4320	LCD EEPROM version number, characters 1–3	ASCII, read only

Table 16. 06400s Message Parameters

Address (4xxxx)	Name	Format
6401	Device address	Hex
6402	Parent address	Hex, read only

Example: Storing a Model Number

For example, the model number 148691 is stored as shown below.

© Banner Engineering Corp. All rights reserved.
www.bannerengineering.com

Address (4xxxx)	Name	Modbus Register Value (in hex)	Character Representation
4111	Model number digits 6-5	0x3139	1 9
4112	Model number digits 4-3	0x3638	6 8
4113	Model number digits 2-1	0x3431	4 1

Example: Parameters Stored as Numbers

Parameters stored as number values (not ASCII) read out directly as 16-bit values. Examples of parameters of this type include the Parent Address or Device Address.

Address (4xxxx)	Name	Value (in hex)	Value (decimal)
6401	Device address	0x002A	42
6402	Parent address	0x0023	35

5.19 Device and System Parameters

5.19.1 08200s Sample On Demand

To sample on demand is to trigger inputs to immediately sample. A host system triggers this sampling by writing a specific value to the sample-on-demand registers.

After the selected inputs are sampled, the MultiHop device resets the sample-on-demand register(s) back to zero. It is up to the host system to retrieve the value of the sampled input. There are two ways to trigger a Sample on Demand.

1. Write a value to register 8201, or
2. Write a one (1) to any of the individual input's registers 8221 (input 1) through 8236 (input 16).

Do not write to both register 8201 and the registers 8221 through 8236.

8201 input 1-16 sample-on-demand latch (bit field)
Use this bit field register to trigger a sample on demand to more than one input using a single register. For example, to trigger a sample on demand for inputs 1 and 5, write 0000 0000 0001 0001 (0x0011) to this register.

8221 input 1 sample-on-demand latch
Write a one (1) to this register to sample input 1.

8222 input 2 sample-on-demand latch
Write a one (1) to this register to sample input 2.

8236 input 16 sample-on-demand latch
Write a one (1) to this register to sample input 16.

© Banner Engineering Corp. All rights reserved.
www.bannerengineering.com

Chapter Contents

6.1 MultiHop Radio Menu System 40
6.2 Sleep Mode in MultiHop Radios 42
6.3 Reset the Radio or Restore the Factory Defaults 43
6.4 Examples 43
6.5 Configuring Low-Power Radios 44
6.6 Connecting Multiple Modbus Sensors to a MultiHop Radio 44
6.7 Network Formation 46
6.8 Power 54
6.9 Communication 55

Chapter 6 Additional Information

6.1 MultiHop Radio Menu System



When power is applied, the MultiHop radio begins running. The display screen autoscrolls through the **RUN** menu and communication between the devices is enabled. Autoscrolling through the **RUN** menu is the normal operating mode for all devices on the wireless network.

Access the menu system using the push buttons and the LCD.

© Banner Engineering Corp. All rights reserved.

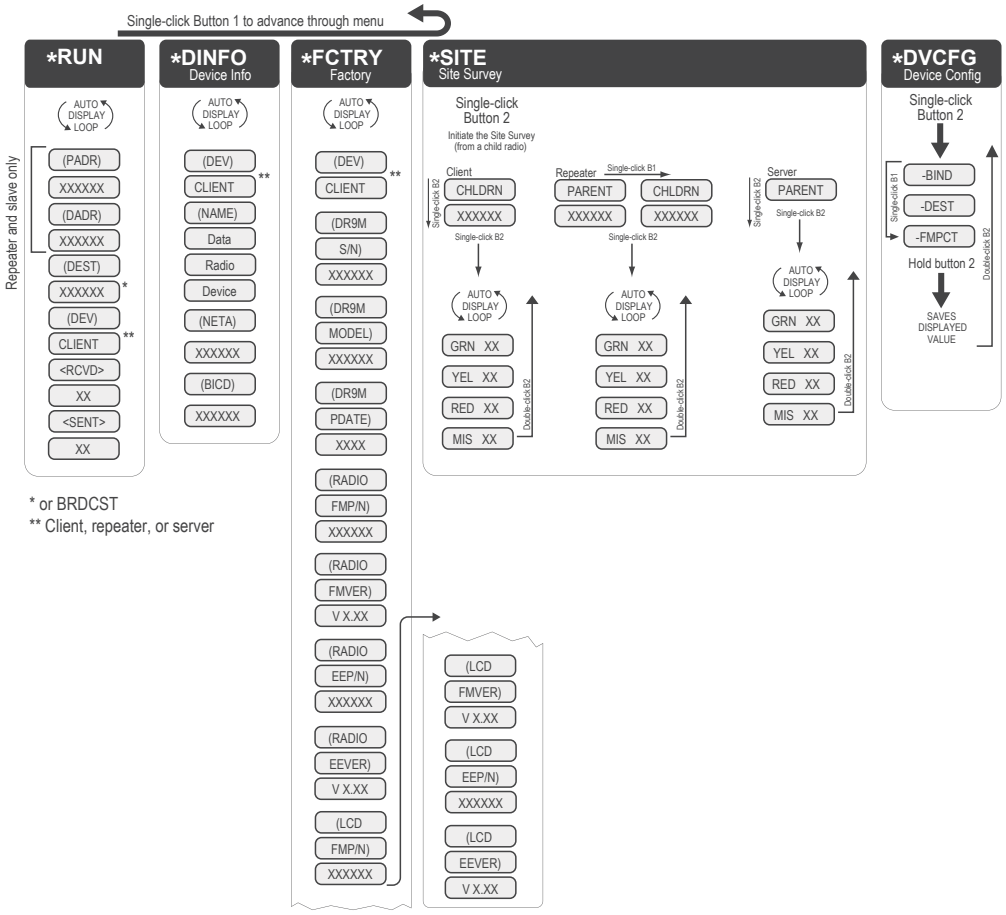

From the **RUN** menu (or any menu), single-click button 1 to advance through the top-level menus. Top-level menus are displayed on the LCD with an asterisk (*) in front of the menu name.

Double-click button 2 to pause or resume the auto-display loop. Use button 1 to advance through the items in that menu. (Enter “auto scrolled” menus by double-clicking button 2. Enter the other menus by single-clicking button 2.)

Run

The **RUN** menu displays the network ID, parent address, device address, current destination address, operational mode (client, repeater, server), and the number of received and sent data packets.

PADR—Parent’s device address, a unique number based on the parent device’s serial number and assigned by the factory. The **PADR** is the 6-digit serial number minus 65535.

DADR—Device address, a unique number based on the serial number and assigned by the factory. The **DADR** is the 6-digit serial number minus 65535.

DEST—The current destination address to route messages. When this displays **BRDCST**, the device is either in transparent mode and is broadcasting the messages to all devices, or the device is in the early stages of Modbus mode and is broadcasting messages to determine the paths to specific device addresses.

RCVD—The number of serial messages received.

SENT—The number of serial messages sent.

DINFO (Device Info)

The DINFO menu displays the device information.

(NAME)—An 18-character name users may assign to the device.

(NETA)—Network Address (display only).

(BICD)—Binding Code (display only).

FCTRY (Factory)

The FCTRY menu displays the factory information about the device, including the model, dates of manufacture, and version numbers.

S/N—The device’s serial number.

Model #—The DX80DR9M family model number.

PDate—Production date.

Radio FMP/N—Firmware part number.

SITE (Site Survey)

Single-click button 2 to pause/resume the auto display loop. While paused, use button 1 to advance through the GRN, YEL, RED, and MIS displays.

© Banner Engineering Corp. All rights reserved.
www.bannerengineering.com

DVCFG (Device Configuration)

Single-click button 2 to enter this menu. Use button 1 to move through the options in this menu.

-BIND—Binding Code. Single click button 2 to manually set the binding code. Once in the binding code command, use button 2 to select the digits; use button 1 to increment the selected digit. Press and hold button 2 to save the new binding code. The device asks if you want to save the new setting (button 2) or discard the new setting and reselect (button 1).

-DEST—Destination Address. To force message routing when operating in transparent mode, set a specific destination address.

-FMPCT—Formation percentage, default value of 50%. This device will not form a parent/child relationship with a parent radio that misses more than 50% of the timing beacons (approximately a 25% site survey link value). If the only option for a child is a parent with a less than a 25% site survey link value, change this value.

6.2 Sleep Mode in MultiHop Radios

Sleep mode was created to extend the battery life of a battery-powered radio after it loses its radio connection to its parent radio. Instead of continuously searching for the parent, and using up battery life, MultiHop radios search for the “lost” parent briefly, then go to sleep for a specific period of time before searching again.

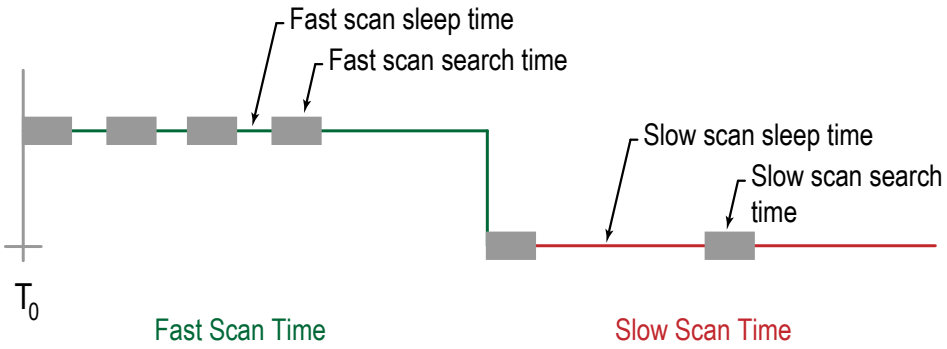

Five parameters are used to define sleep mode.

6345 Fast Scan Time

The Fast Scan Time defines the initial "search" time for a device. During this time, the device searches for its parent. After the Fast Scan Time has ended, the device enters Slow Scan Time. Set in 100 milliseconds intervals. Default: 15 minutes, which is nine thousand 100 ms intervals. Set to 0 to disable.

6346 Fast Scan Search Time

The Fast Scan Search Time is the length of time within the Fast Scan Time that the radio is actively searching for a parent radio. Set in 100 milliseconds intervals. Default: 15 minutes, which is nine thousand 100 ms intervals. Set to 0 to disable.

6347 Fast Scan Sleep Time

The Fast Scan Sleep Time is the length of time the radio "sleeps" between searches. Set in 100 milliseconds intervals. Default: 0 seconds. Set to 0 to disable.

Using these values for the Fast Scan Time settings results in a radio that for the first 15 minutes it is turned on, continuously "searches" for its parent radio. If your radio is powered by 10 to 30 V DC, you may set 6345 through 6349 to zero to disable. Fast and Slow Scan Time settings are used to prolong battery life for battery-powered devices.

6348 Slow Scan Search Time

After the Fast Scan Time has ended, the device enters Slow Scan Time. The Slow Scan Search Time is the length of time within the Slow Scan Time that the radio is actively searching for a parent radio. Set in 100 milliseconds intervals. Default: 15 seconds, which is one hundred fifty 100 ms intervals. Set to 0 to disable.

6349 Slow Scan Sleep Time

The Slow Scan Sleep Time is the length of time the radio "sleeps" between searches. Set in 100 milliseconds intervals. Default: 15 minutes, which is nine thousand 100 ms intervals. Set to 0 to disable.

Using these values for the Slow Scan Time settings results in a radio that, after the first 15 minutes of being turned on, spends 15 seconds every 15 minutes searching for its parent radio. If your radio is powered by 10 to 30 V DC, you may set 6345 through 6349 to zero to disable. Fast and Slow Scan Time settings are used to prolong battery life for battery-powered devices.

If your MultiHop radio is powered by 10–30 V DC, there is no need to conserve power by using Sleep Mode. To disable Sleep Mode, write a zero (0) to the Sleep Mode parameters listed.

6.2.1 Enabling Deep Sleep Mode

Battery-powered radios can be stored in Deep Sleep mode to conserve battery power. During Deep Sleep, the radio does not communicate with or attempt to locate its parent radio and all I/O and switched power are inactive.

To enable Deep Sleep mode on a MultiHop radio, follow these steps.

© Banner Engineering Corp. All rights reserved.
www.bannerengineering.com

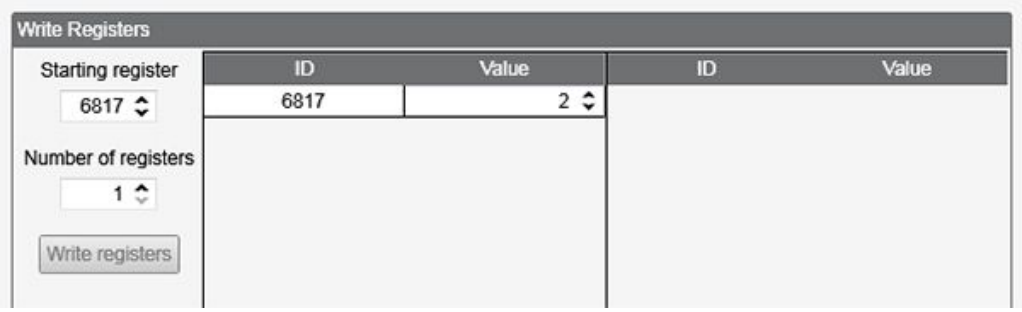

1. Launch the MultiHop Configuration Software.
2. Go to the **Register View** screen.
3. Select the MultiHop device ID from the drop-down list.
4. In the **Write Register** section, enter 6817 as the **Starting register**.
5. Enter 1 as the **Number of registers**.
6. In the **Value** field, enter 2.
7. Click **Write registers**.

After enabling the ability to use Deep Sleep mode, enter Deep Sleep mode by holding down button 2 for 5 seconds. To wake the MultiHop radio from Deep Sleep mode, hold down button 2 for 5 seconds.

6.3 Reset the Radio or Restore the Factory Defaults

To remotely reset radios or restore factory defaults, use the Modbus registers defined below or use the MultiHop Configuration Software.

You may also use a Modbus multiple write command to write to all registers at once.

To reset the binding code back to the serial number, use the MultiHop radio's LCD menu system and set the binding code to 0.

1. Write to one of these three registers, depending on the desired function.
   - To restore the factory defaults for I/O parameters, write a 1 to register 44152. (Default value: 0)
   - To restore the system parameters, write a 1 to register 44153. After restoring system parameters, the radio must be re-bound to its client. (Default value: 0)
   - To re-initialize all system parameters created from the serial number, write a 0 to register 44154. This does not reset the binding code. After resetting system parameters, the radio must be re-bound to its client. (Default value: 1)

   After performing a system parameter restore or re-initialize using registers 44153 or 44154, the MultiHop radio stops communicating with the wireless network.
2. Trigger the reset/restore by writing a delay time to register 44151. This is the delay time before the selected function begins.

   The delay time is in 100 millisecond units. For example, writing a 1 triggers the selected action to occur in 100 milliseconds; writing a 20 causes the action to occur in 20 × 100 milliseconds, or two seconds. Default value: 0

   After the selected functions are completed, the system writes a zero to this register.
3. If you have performed a system parameter restore or re-initialized using registers 44153 or 44154, run the binding procedure to add the radio back into the network.

6.4 Examples

This example restores the I/O parameters to the factory defaults after one second has passed. After the I/O parameters return to their factory default values, the radio writes a 0 into register 44151.

Function	44152	44153	44154	44151
Restore I/O parameters to default settings	1	0	1	10

© Banner Engineering Corp. All rights reserved.
www.bannerengineering.com

This example restores all system parameters to the factory defaults after 100 milliseconds. After the restore is complete, the radio writes a 0 into register 44151. After the system defaults are reset, rebind the radio to the network.

Function	44152	44153	44154	44151
Restore system parameters to default settings	0	1	1	1

This example cycles the power to the radio after 1 second. After the cycle is complete, the radio writes a 0 into register 44151. This command also forces the radio to re-synchronize to its parent radio.

Function	44151
Cycle power to the radio	10

6.5 Configuring Low-Power Radios

Changing some default settings optimizes MultiHop radios for low-power applications. To extend the battery life or reduce the radio traffic of your MultiHop radio, consider changing the following parameters.

There are several DIP switch positions that can be modified to reduce power consumption.

- **Reduce the number of receive slots**—The number of receive slots indicates the number of times out of 128 slots/ frames a child radio can receive data from its parent radio. Setting a child radio's receive slots to four reduces the total power consumption by establishing that the child can only receive data from its parent four times per 128 slots, or every 1.28 seconds. To control the receive slots using DIP switches 1 through 4, disable the serial connection by setting DIP switches 3 and 4 to the ON position. To change the number of receive slots without disabling the serial connection, contact the factory.
- **Disable the serial communication**—Reduces the power consumption.
- **Reduce the radio transmit power**—For 900 MHz radios, the transmit power can be reduced from 1 watt to 250 mW. The transmit power will be a significant portion of the total power consumption if data is transmitted more than once per minute. For slower transmit rates, such as once every ten minutes, reducing the transmit power to 250 mW does not significantly reduce the total power consumption.

Using the MultiHop Configuration Software, increase the sample interval for inputs. The greater the interval, the slower the input samples. For example, a default sample interval is once every 0.04 seconds (or 40 milliseconds). To reduce the energy consumption of this MultiHop radio, increase the interval between samples to once every 0.5 seconds or once every 1 second. Set the sample interval based on the desired energy consumption and the speed necessary for your application.

6.6 Connecting Multiple Modbus Sensors to a MultiHop Radio

The MultiHop Radio networks may have up to 50 remote Modbus devices within their network. This allows the user to hard wire multiple Modbus sensors in the same general location without needing additional slave radios. When the network uses the DXM100-B1R2 Wireless Controller, the network may have up to 99 remote Modbus devices, which includes both radios and Modbus sensors.

The following Modbus sensors may be configured similarly:

- QM42VT2 Vibration and Temperature Sensors
- M12FTH3Q Temperature and Humidity Sensor
- K50UX2RA Ultrasonic Sensor

6.6.1 Set the Device ID on a Modbus Sensor

Required tools include: a PC with the Sensor Configuration Software installed and the **BWA-HW-006** or **BWA-UCT-900 USB** to RS-485 converter cable.

The default Modbus ID of the **QM42VT2** sensor is 01 and must be changed for each sensor using the software. Modbus IDs 01 through 10 are reserved for devices directly connected to the host. Use Modbus IDs 11 through 60 for the Multihop client, repeater, server radios, and for the **QM42VT2** Modbus sensors.

For example, assign the client radio to be ID 11, the server radio to be ID 12, and five QM42VT2s to be IDs 13 through 17.

© Banner Engineering Corp. All rights reserved.
www.bannerengineering.com

1. Connect the QM42VT2 to the computer running the Sensor Configuration Software using a BWA-HW-006 converter cable.
2. Launch the software.
3. Choose the correct COM port and click **Connect**.
4. From the drop-down list, select the Modbus sensor you are configuring and click **Ok**. For this example, select Vibration.

   The software screens specific to the Vibration sensor display.
5. From the **Settings** screen under **Modbus Settings**, select the **Modbus Server ID** and click **Set**.

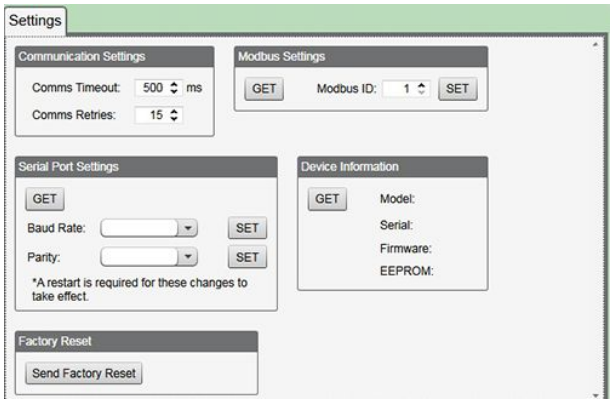

6. To verify the Modbus ID has been changed, go to the **Vibration** screen. Under **Read Settings**, click **Read**.

   The sensor's Modbus ID displays.
7. Disconnect the sensor from the adapter cable and connect the next sensor. Repeat steps 3 through 6 for each sensor that needs to be assigned a device ID.

6.6.2 Wiring Multiple Modbus Sensors to a MultiHop Server Radio

Use either a splitter cable or a junction box to wire multiple Modbus server sensors to a MultiHop server radio.

To connect two Modbus sensors to a MultiHop radio, you may use the following splitter cable.

4-Pin Rounded Junction M12 Female Branch to M12 Male Trunk Splitter Cordsets			
Model	**Branches (Female)**	**Trunk (Male)**	**Pinout**
CSRB-M1240M1241	0.305 m (1 ft)	No Trunk	Female 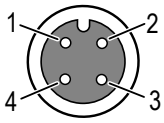 Male 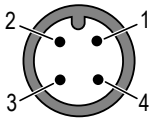 1 = Brown 2 = White 3 = Blue 4 = Black
CSRB-M1240M1242	0.61 m (2 ft)		
CSRB-M1240M1243	0.914 m (3 ft)		
CSRB-M1240M1244	1.22 m (4 ft)		
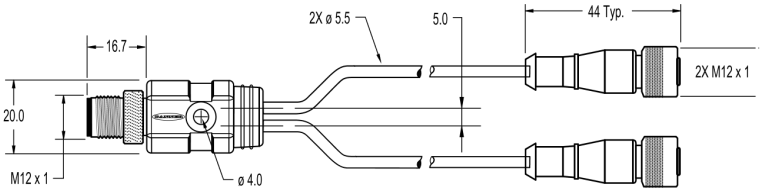			

© Banner Engineering Corp. All rights reserved.
www.bannerengineering.com

Wiring to connect more than two Modbus sensors to a MultiHop radio

Wiring for a junction box

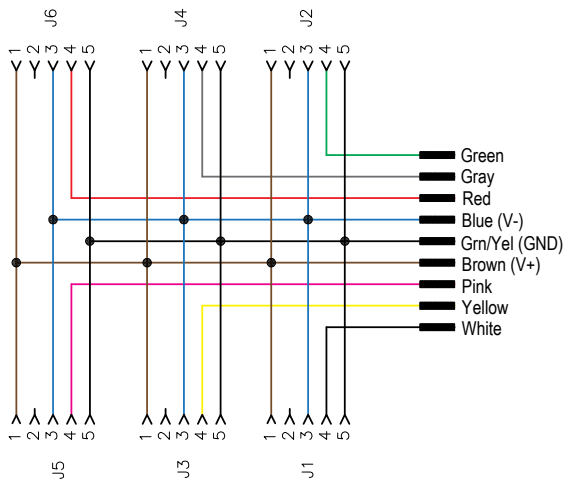

Wiring for a four-trunk splitter cable

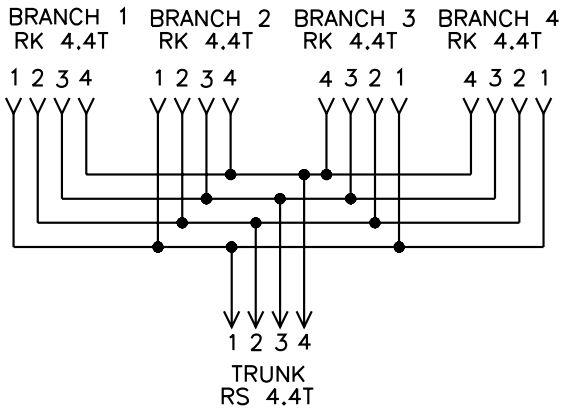

6.7 Network Formation

6.7.1 Binding Mode: What Does MultiHop Binding Do?

Binding MultiHop radios ensures all MultiHop radios within a network communicate only with other radios within the same network. The MultiHop client radio automatically generates a unique binding (multihop) code when it enters binding mode. This code is transmitted to all radios within range that are also in binding mode. After a repeater/server radio is bound, the repeater/server radio accepts data only from the client radio to which it is bound. The binding code defines the network, and all radios within a network must use the same binding code.

After binding your MultiHop radios to the client radio, make note of the binding code displayed under the ***DVCFG › -BIND** menu on the LCD. Knowing the binding code prevents having to re-bind all radios if the client radio is ever replaced.

6.7.2 Why Would I Manually Set the Binding Code?

To quickly replace radios or create ready-to-go spares in an existing network, use the manual binding feature to preset the binding code.

The binding code ties all radios of a wireless network together and is required for radios to communicate with each other. By presetting the binding code in spare radios, replacing radios is quick and easy, minimizing the downtime of the network.

Binding involves locking a MultiHop radio to a specific MultiHop radio configured as the wireless client. After a radio is bound, it only communicates with other radios using the same binding code. All radios within a single wireless network must use the same binding code.

When adding new devices to a network or replacing a damaged device, it may be useful to load the new or replacement device with the binding code without disabling the network to put the client into binding mode.

Set the Binding Code Using the Menu System

Normally, all radios are bound together before they are physically installed. In a replacement situation, the radio client may not always be accessible. Using the manual binding process eliminates the need to put the radio client into binding mode and allows the wireless network to remain operational.

Obtain the existing binding code from the client radio by going to the *DINFO screen. The binding code is displayed under the BICD entry at the end of the parameter list. To manually enter a binding code, follow these steps.

© Banner Engineering Corp. All rights reserved.
www.bannerengineering.com

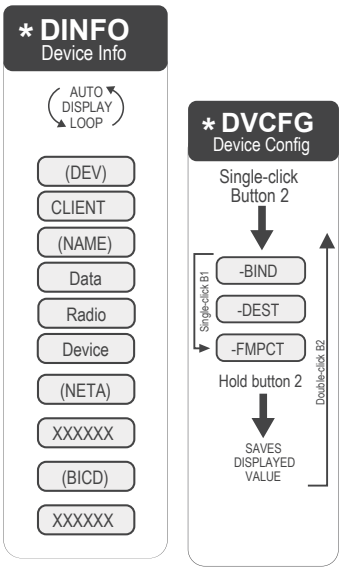

1. Single-click button 1 to advance to the *DVCFG menu.
2. Single-click button 2 to enter the DVCFG menu.

   -BIND displays on the screen as the first option under DVCFG.
3. Single-click button 2 to display the binding code. Record this number if this is the binding code you are copying.
4. To change this binding code, use button 1 to increment the blinking digit. Use button 2 to advance, from left to right, to the next digit.
5. When you are finished making changes, press and hold down button 2 to save your changes. When the screen reads SAVE, release button 2.
6. The radio confirms your request to save.
   - Press button 1 to reject your changes.
   - Press button 2 to save your changes.
7. Double-click button 2 to exit the DVCFG menu.

Set the MultiHop Binding Code Using Modbus Registers

On a MultiHop client radio, the binding code is held in Modbus registers 6362–6363; maximum value of 999999. The binding code is automatically generated at the factory using the serial number of the client device, but can also be set using these Modbus registers or by using the LCD menu system on the client device.

Read the client Radio's binding code or calculate the binding code.

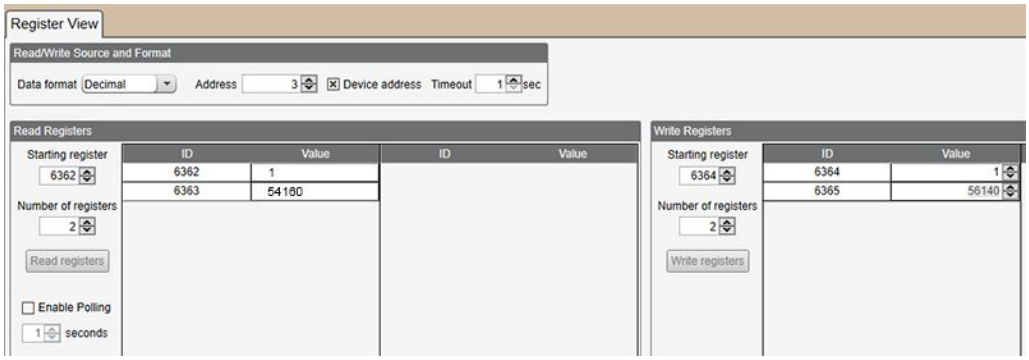

To read the client radio’s binding code: Connect the client device to the MultiHop Configuration Software, then read the client’s binding code stored in Modbus registers 6362 and 6363. This example shows that register 6362 = 1, 6363 = 56140.

To calculate the client radio’s binding code: The factory binding code is a 32-bit value stored in two 16-bit registers within the client radio and can be calculated using the device’s serial number. In this example, the client radio’s serial number is

© Banner Engineering Corp. All rights reserved.
www.bannerengineering.com

121676. (The serial number is printed on the device label, displayed within the menu system on the LCD, or is stored in Modbus registers 4104–4101 as ASCII values.)

For this example, the binding code is:

The value in Modbus register 6362 = Serial # ÷ 65536 = 121676 ÷ 65536 = 1
The value in Modbus register 6363 = Serial # − (Value of 6263)65536 = 121676 − (1)65536 = 56140

Other devices (repeaters and servers) in the MultiHop network store their binding code in Modbus registers 6364–6365. Typically, in the binding process the client radio sends its binding code to the repeater or server; the repeater or server stores this binding code in Modbus registers 6364–6365. The example reads a client radio's binding code, then writes the binding code to a server radio.

1. Write the binding code to the server radio.
    a. Temporarily configure the server radio to be a client radio by altering the DIP switches on the device.
    b. Connect to the MultiHop Configuration Software.
    c. Write the Modbus register values read from the client device's Modbus registers 6362 and 6363 into the attached device's registers 6364 and 6365.
    d. When complete, change the DIP switches back to configure your server radio into a server radio.

All MultiHop radios store two binding codes. Which code they use is dependent upon the DIP switches that establish if they are client, repeater, or server radios.

- All radios are programmed from the factory with a binding code (stored in registers 6362 and 6363) calculated from their individual serial number as if they will be used as client radios.
- Repeater and server radios use Modbus registers 6364 and 6365 to store the binding code they receive from a client radio during the binding process.

A single wireless network uses one binding code — the one that is transmitted from the client device during binding. Although a binding code calculated using the serial number is stored in registers 6362 and 6363 of server and repeater radios, they use the binding code they receive during the binding process, stored in registers 6364 and 6365.

6.7.3 Bind a MultiHop Radio using Menu Navigation

To quickly replace radios or create ready-to-go spares in an existing network, use the manual binding feature to preset the binding code.

Normally, all devices are bound together before they are physically installed. In a replacement situation, the client device may not always be accessible. Using the manual binding process eliminates the need to put the client device into binding mode and allows the wireless network to remain operational.

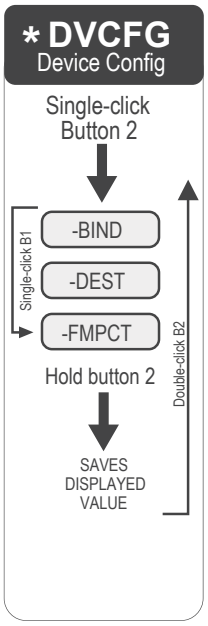

To manually enter a binding code:

1. Single-click button 1 to advance to the ***DVCFG** menu.
2. Single-click button 2 to enter the **DVCFG** menu. **-BIND** displays on the screen as the first option under **DVCFG**.
3. Single-click button 2 to display the binding code. Record this number if this is the binding code you are copying.
4. To change this binding code, use button 1 to increment the blinking digit. Use button 2 to advance, from left to right, to the next digit.
5. When you are finished making changes, press and hold down button 2 to save your changes. When the screen reads **SAVE**, release button 2.
6. The device confirms your request to save. Press button 1 to reject your changes. Press button 2 to save your changes.
7. Double-click button 2 to exit the **DVCFG** menu.

6.7.4 Bind a MultiHop Radio (without Rotary Dials)

To create your MultiHop network, bind the MultiHop server radios to the designated client radio and assign a device ID using the client's rotary dials.

1. Apply power to the client radio.
2. Put the MultiHop client radio into binding mode.
    - For client radios with two buttons: triple-click button 2
    - For client radios with one button: trick-click the button

© Banner Engineering Corp. All rights reserved.
www.bannerengineering.com

For the two LED/button models, both LEDs flash red and the LCD shows *BINDNG and *client. For single LED/button models, the LED flashes alternatively red and green.

3. Using the client radio's rotary dials, select the Device ID to assign to the MultiHop server radio. Use the left rotary dial for the left digit and the right rotary dial for the right digit. For example, to assign your server radio to Device ID 10, set the left dial to 1 and the right dial to 0.
4. Put the MultiHop server radio into binding mode.
    - For two-button radios, triple-click button 2.
    - For one-button radios, triple-click the button.

   The server radio enters binding mode and searches for any client radio in binding mode. While searching for the client radio, the two red LEDs flash alternately. When the server radio finds the client radio and is bound, both red LEDs are solid for four seconds, then both red LEDs flash simultaneously four times. After the server receives the binding code transmitted by the client, the server radio automatically exits binding mode.
5. Repeat this sequence (steps 3 and 4) for as many MultiHop server radios as you need to bind.

   If two MultiHop server radios are accidentally assigned the same Device ID, rerun the binding procedure on one of the radios to reassign the ID. The binding sequence may be run as many times as necessary.
6. To exit binding mode on the MultiHop client radio, double-click button 2 on the MultiHop client radio. The client radio restarts and enters RUN mode.

Child Radios Synchronize to the Parent Radios

The synchronization process enables a Sure Cross® radio to join a wireless network formed by a client radio. After power-up, synchronization may take a few minutes to complete. First, all radios within range of the client data radio wirelessly synchronize to the client radio. These radios may be server radios or repeater radios.

After repeater radios are synchronized to the client radio, any radios that are not in sync with the client but can "hear" the repeater radio will synchronize to the repeater radios. Each repeater “family” that forms a wireless network path creates another layer of synchronization process. The table below details the process of synchronization with a parent. When testing the devices before installation, verify the radio devices are at least two meters apart or the communications may fail.

6.7.5 Bind a MultiHop Radio without Rotary Dials Using Modbus Commands

Use Modbus commands to bind server MultiHop radios to a client radio when the server radio does not have rotary dials.

To use a Modbus host controller to trigger binding mode on a MultiHop radio, the following conditions are required:

- The MultiHop radio is configured as a client radio
- The firmware version of the client MultiHop radio is v2.9C or higher

Apply power to the radios. From the Modbus host controller:

1. Write 0x01*NN* (hex) to the MultiHop client's register 6371; where *NN* is the server ID number in hex.

Value to write to register 6371		Action
Decimal	Hex	
256	0x0100	The client radio enters binding mode and does not assign a server ID (used with servers that get their ID from the rotary dials).
256	0x0101	The client radio enters binding mode and assigns the server that enters binding mode to ID 1
261	0x0105	The client radio enters binding mode and assigns the server that enters binding mode to ID 5
291	0x0123	The client radio enters binding mode and assigns the server that enters binding mode to ID 35

   The LEDs flash alternately when the client radio is in binding mode.
2. Enter binding mode on the server radio.
    - If you have a two-button server, triple-click button 2.
    - If you have a one-button server, triple-click the button.
    - If you have a server with no buttons, remove the top cover and set both the left and right rotary dials to F to enter binding mode.

   The server enters binding mode and locates the client radio in binding mode. Verify the two LEDs on the data radio are flashing red alternatively during the binding mode. For the board-level data radio, the LED should be flashing green and red alternatively during the binding mode.

© Banner Engineering Corp. All rights reserved.
www.bannerengineering.com

After the server/repeater receives the binding code transmitted by the client, the server and repeater radios automatically exit binding mode.

3. Repeat steps 1 and 2 for all servers that will communicate to this client radio.
4. Write 0x0000 (hex) to the MultiHop client radio's register 6371 to stop the binding procedure.

For more information about using Modbus commands, refer to Host Controller Systems instruction manual (p/n 132114).

6.7.6 Bind a MultiHop Radio Using the Configuration Software

The MultiHop Configuration Software can be used to simulate the procedure with the computer acting as the Modbus host controller.

To use the software to enter binding mode:

1. Go to the **Register View** tab.
2. Under **Write Registers**, enter 6371 for the starting register.
3. In the **Value** drop-down box, enter 256.

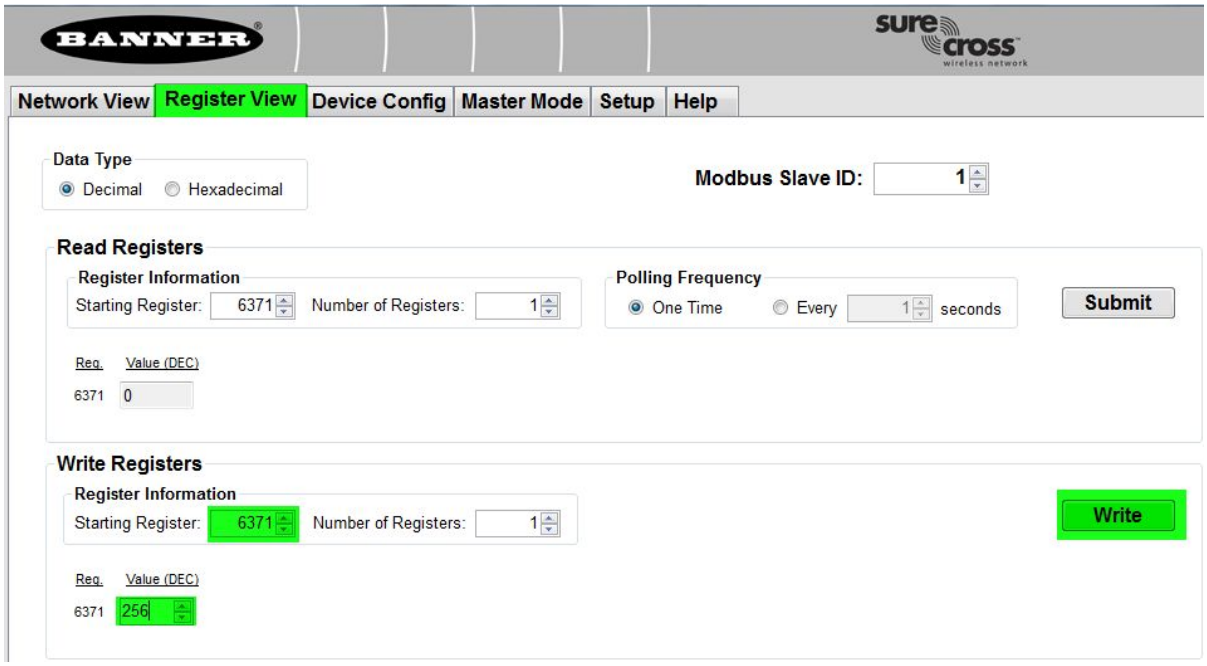

4. Click **Write** to send the value to the MultiHop client radio.

   The data radio enters binding mode.
5. Verify the LEDs on the data radio are flashing red alternatively during the binding mode. For the MultiHop board modules, the LED flashes green and red alternatively while in binding mode.

To disable the binding mode, write a 0 to register 6371.

6.7.7 Conduct a Site Survey using Modbus Commands

When triggering a site survey from a Modbus client/host system, only the child radio is used to start the site survey. While the site survey is running, you will not be able to communicate with the radio server. To trigger a site survey using a Modbus client/host-controlled system, follow these steps:

1. Write zeros (0) to the child radio's Site Survey Results registers: 46452 through 46455.
2. Write a one (1) to the child radio's External Site Survey Control register: 46451

   The site survey between the child radio and its parent radio begins. Unlike other site survey processes, this method of triggering a site survey results in only 100 packets sent between the parent and child.
3. Wait about 10 seconds for the site survey to complete.

   After the 100 packets are sent, the site survey shuts down automatically.
4. Read the child radio's results registers.

© Banner Engineering Corp. All rights reserved.
www.bannerengineering.com

Register 46452 contains the green signal strength results. Register 46453 contains the yellow signal strength results. Register 46454 contains the red signal strength results. Register 46455 contains the number of missed packets.

6.7.8 MultiHop Network Formation

At the root of the wireless network is the MultiHop radio client. The radio client contains the initial network routing data and the conversion data for the Modbus Address IDs. If the MultiHop radios are running in transparent mode (non-Modbus protocol), network routing information is not used and transactions are broadcast to the entire network.

As the MultiHop radios power up, all MultiHop radio repeaters or servers within range of the MultiHop radio client connect as children of the radio client, which serves as their parent. After radio repeaters synchronize to the radio client, additional radios within range of the repeater can join the network. The radios that synchronize to the repeater form the same parent/child relationship the repeater has with the radio client: the repeater is the parent and the new radios are children of the repeater.

The network formation continues to build the hierarchical structure until all MultiHop radios connect to a parent radio. A MultiHop radio can only have one designated parent radio.

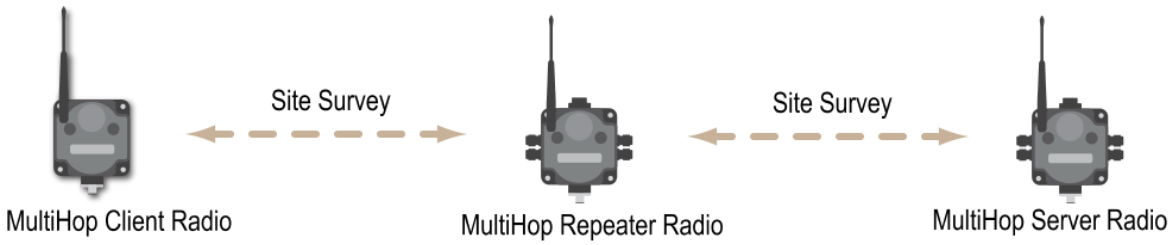

After MultiHop radios are communicating with their parents, the network formation information is transmitted back to the radio client, creating a path that is stored in each parent radio's routing tables. Each parent radio stores only one link or step along a path to an end radio. The routing information for non-MultiHop Modbus server devices is stored as the devices are accessed by the host system.

Only the MultiHop radio client understands Modbus Address IDs. The conversion from Modbus Address ID to a MultiHop device address is done in the radio client as a Modbus message is received. After the Modbus Address ID to MultiHop device address conversion is determined, all network routing uses the device address, not the Modbus Address ID. A device address is similar to an Ethernet MAC address (sometimes the MultiHop device address is referred to as the MAC address).

Building MultiHop Formation Tables

As the network is formed, new device addresses are placed in the Network Formation Table in the MultiHop radio client (starting at register 47002). The new radios are stored in the order in which they synchronized to parent radios.

Register 47001 stores the number of radios in the Network Formation Table. Associated by position to the device address in the Network Formation Table is the routing data (starting at register 47302). The actual routing data is the next device address in the path to get to the end radio. The example below shows a Network Formation Table on the radio client for three radios in the network.

Register	Data	Description	Register	Data	Description
47001	03	Defines the number of radios in the network			
47002	54321	First device address in the network formation table	47302	54321	The same device address indicates that the target device is connected to this radio.
47003	12345	Second device address in the network formation table	47303	23456	A different device address indicates the first step in the route is going to device 23456.
47004	23456	Final device address in the network	47304	23456	Link indicates the device is connected to this parent radio.

Register 47302 is associated to register 47002 by its position in the table. Therefore, the link for the device address stored at register 47002 is stored in register 47302.

© Banner Engineering Corp. All rights reserved.
www.bannerengineering.com

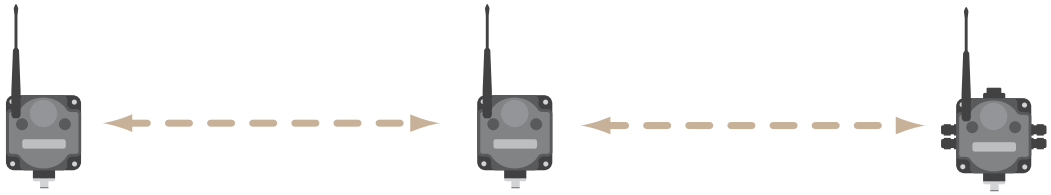

Client Radio, MultiHop ID 11
Address 54321

Repeater, MultiHop ID 14
Address 23456

Server, MultiHop ID 15
Address 12345

Correlating Device Address to Modbus Address IDs

The Modbus Address ID table defines the association from a Modbus Address ID to the MultiHop device address. (The Modbus Address ID for a MultiHop radio is usually defined by the rotary switches whereas the device address is a 5-digit number assigned by the factory.)

Register 46502 defines the Modbus Address ID offset for wireless Modbus servers. An ‘11’ in this register would mean that wireless Modbus server devices start at ID 11. Any messages referring to Modbus IDs 1 through 10 are ignored by the wireless devices.

Registers 46504 through 46604 store the MultiHop device addresses in order, starting with the Modbus ID defined by the offset register (46502). In the example below Modbus IDs 11, 14, and 15 are in the table. Register 46503 defines the maximum number of Modbus server for this system.

Register	MultiHop ID	Data	Description
46502		11	Wireless Modbus IDs start at 11
46503		50	The number of Modbus servers defined for the system
46504	11	54321	MultiHop device address 54321 is Modbus ID 11
46505	12	65535	Modbus ID 12 is not used
46506	13	65535	Modbus ID 13 is not used
46507	14	23456	Device address 23456 is Modbus ID 14
46508	15	12345	Device address 12345 is Modbus ID 15

6.7.9 Formation Percentage on MultiHop Radios

The formation percentage parameter determines what minimum site survey link quality is acceptable to join to a parent radio. The factory default for the formation percentage is a value of 70.

After powering up, MultiHop radios automatically begin forming a wireless network. Radio repeaters and radio servers listen to all potential parent radios and use the site survey results to select the most efficient and reliable radio as their parent radios.

The formation percentage parameter determines what minimum percentage of RF link is acceptable to join to a parent radio. To calculate the link percentage, divide the register value by 100, then square it. For example, $(70 \div 100)^2$ results in an approximately 49% site survey radio link, as shown on the MultiHop Configuration Software **Network › Network and Device Overview** screen.

For most applications, the factory default value is a good setting because signal strength varies from season to season. Under some long-range conditions, users may want to decrease this value and allow radios with a weaker signal to join a network. To build a robust wireless network that forces radio servers to use radio repeaters instead of linking directly to the radio client, increase the formation percentage.

Change the Formation Percentage

Use the MultiHop radio’s LCD to manually set the formation percentage. The formation percentage parameter can also be set using Modbus Register 46351.

1. Single-click button 1 to advance to the DVCFG menu.
2. Single-click button 2 to enter the DVCFG menu.

   BIND displays on the screen as the first option under DVCFG.
3. Single click button 1 to move through the DVCFG menu until you reach FMPCT (Formation Percentage).

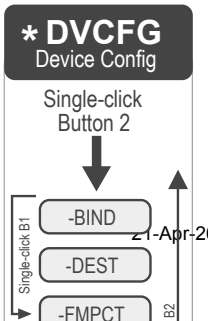

© Banner Engineering Corp. All rights reserved.
www.bannerengineering.com

4. Single click button 2 to display the current formation percentage.

   The formation percentage displays using the full six-digit screen. Factory default will display as 000070 though only the last two digits are used for this parameter.
5. Click button 2 to advance from left to right. When the second digit from the right is blinking, use button 1 to increment the digit.
6. After you are finished making changes, press and hold down button 2 to save your changes. When the screen reads SAVE, release button 2.
7. The radio confirms your request to save. Press button 1 to reject your changes. Press button 2 to save your changes.
8. Double-click button 2 to exit the DVCFG menu.

Setting the Formation Percentage

An application only requires data once per day, but because of the distance and obstacles between radios, the site survey link quality is about 20%. The register value should then be: $100 \times (0.20)^{1/2} = 100 \times 0.447 = 45$

Write to Modbus register 46351, or, using the menu system and LCD on the radio, set the value to 000045.

Formation parameter (register value) = $100 \times (\text{site survey link quality percent} \div 100)^{1/2}$

6.7.10 Forced Routing with MultiHop Radios

The MultiHop forced routing feature allows users to define routing tree structures.

Users can define the parent radio device for some or all the server or repeater devices. As an added benefit, the sync time for the radios with forced routing decreases because the device doesn't spend time looking for multiple parent devices. Force the routing using the radio's LCD or the MultiHop Configuration Software.

RF firmware V3.1 or higher is required to enable this feature. Contact Banner Engineering to obtain the latest firmware revisions.

> **IMPORTANT:** The user must still bind all radios that communicate within the same wireless network. Forced routing only defines a parent device for a child radio (server or repeater).

Determine the Firmware Version

Use the MultiHop radio's LCD menu system to verify the radio's firmware version.

1. Press button 1 until you reach the **FCTRY** menu.
2. Press button 2 to enter the **FCTRY** menu.

   The LCD automatically displays all device information.
3. The firmware version is displayed as the **FMVER**.

Configure a Forced Routing from the Child Radio's LCD

Follow these steps to use the LCD menu system to configure force routing.

1. Press button 1 until you reach the **DVCFG** menu (device configure menu).
2. Press button 2 to enter the **DVCFG** menu.
3. Press button 1 until the display shows **-PARNT**.
4. Press button 2.
5. Use button 1 to increment the digits and button 2 to move between digits. The first digit is always ZERO, the largest entered value will 65535.
6. Enter the parent device address (1 through 65535). Find the parent device address by viewing the LCD menu (**RUN › DADR**).
7. Press and hold down button 2 to enter the save option.
8. Select 'yes' or 'no' by using button 2 or button 1 to save the parent address.

Configure a Forced Routing using the Software

Follow these steps to use the MultiHop Configuration Software to configure force routing.

1. Use adapter cable **BWA-UCT-900** to connect a 1 Watt MultiHop radio to your computer.
2. Launch the MultiHop Configuration Software and connect to your client radio.

© Banner Engineering Corp. All rights reserved.

3. On the **Network** screen, enter the MultiHop Radio ID of the client radio and click **Read**.

   The network of repeater and server radios displays, along with the serial number, model number, and all versions. Verify the child radio you want to force a routing from has RF firmware v3.1 or higher.
4. On the **Register View › Write Registers** screen, enter the Modbus server ID (child) of the device to be force routed.
5. Enter `6368` in the **Starting Register** and enter the Parent Device Address in the **Value Register**. Click **Write registers**.
6. To verify the contents of the Read Register, enter `6368` and click **Read registers**. The route of the child should now be forced.

Remove a Forced Routing

To remove a forced routing using the child radio's LCD, follow the same procedure used to configure the forced route, but enter all zeros (0) for the **-PARNT** address.

To remove a forced routing using the MultiHop Configuration Software, follow the same procedure used to configure the forced route, but enter 00000 into Starting Register 6368. After the forced route is removed from the child radio, the network is still bound and the child radio automatically detects a path back to the client radio.

If you want to unbind the radio from the wireless network, follow these steps from the child radio:

1. Triple-click button 2 to put the device into binding mode.
2. When in binding mode, press and hold button 2 for 10 seconds. The radio automatically exits binding mode. The radio is now unbound from the network and must be re-bound to the client.

6.8 Power

6.8.1 Using 10–30 V DC to Power Two Radios

When using 10 V DC to 30 V DC (Outside the USA: 12 V DC to 24 V DC, ± 10%) to power both the MultiHop data radio and a Gateway, use the 4-pin M12 splitter cable to avoid damaging either radio.

	1	CSB-M1240M1241. Splitter cable, 4-pin M12 QD, No trunk male, two female branches, yellow. Use to connect the data radio to the Gateway.
	2	DX80DR9M-H*x*. MultiHop Data Radio powered by 10 V DC to 30 V DC (Outside the USA: 12 V DC to 24 V DC, ± 10%)
	3	DX80 Gateway, powered by 10 V DC to 30 V DC (Outside the USA: 12 V DC to 24 V DC, ± 10%)

6.8.2 Using Solar to Power Two Radios

When using a solar panel to power two radios, use the 5-pin M12 splitter cable.

	1	CSRB-M1250M125.47M125.73. Splitter cable, 5-pin M12 QD, No trunk male, two female branches, black. Most commonly used with solar and other FlexPower devices.
	2	DX80DR9M-H*x*. MultiHop Data Radio
	3	DX80 FlexPower Gateway

© Banner Engineering Corp. All rights reserved.
www.bannerengineering.com

6.9 Communication

6.9.1 Set the MultiHop Baud Rate to 1200

The standard baud rate settings for the serial interface are 9600, 19200, and 38400. These are typically selected using the DIP switch settings on the MultiHop radio. A 1200 baud rate was implemented in firmware 1.3H and later.

To select a 1200 baud rate using the MultiHop Configuration Software, select the baud rate from the drop-down list. All other parameters are automatically changed to their appropriate value.

To select a 1200 baud rate by writing to Modbus registers, follow these steps:

1. Verify you have MultiHop firmware version 1.3H or later.
2. Set the DIP switches to select the custom baud rate.
   For most MultiHop radio models, the custom baud rate is selected using DIP switches 1 and 2.
3. Write Modbus register 46101 with 0x04 to select the baud rate timing for 1200 baud.
4. Write Modbus register 46105 with 0xFF (255) to select the maximum End-of-Message time value.
5. Write Modbus register 46109 with 1 to adjust the End-of-Message timeout when running this slow baud rate.
6. Cycle power on the device.

6.9.2 Set the MultiHop Baud Rate to 2400

The standard baud rate settings for the serial interface are 9600, 19200, and 38400. These are typically selected using the DIP switch settings on the MultiHop radio. A 2400 baud rate was implemented in firmware 1.3H and later.

To select a 2400 baud rate using the MultiHop Configuration Software, select the baud rate from the drop-down list. All other parameters are automatically changed to their appropriate value.

To select a 2400 baud rate by writing to Modbus registers, follow these steps:

1. Verify you have MultiHop firmware version 1.3H or later.
2. Set the DIP switches to select the custom baud rate.
   For most MultiHop radio models, the custom baud rate is selected using DIP switches 1 and 2.
3. Write Modbus register 46101 with 0x0B to select the baud rate timing for 2400 baud.
4. Write Modbus register 46109 with 1 to adjust the End-of-Message timeout when running this slow baud rate.
5. Cycle power on the device.

© Banner Engineering Corp. All rights reserved.
www.bannerengineering.com

Chapter Contents

7.1 Sure Cross® MultiHop Data Radio Documentation 56
7.2 Verifying the Firmware Version of the MultiHop Radio 56
7.3 Maintenance 56
7.4 Sure Cross® Radio Certifications 59
7.5 Contact Us 61
7.6 Warnings 62
7.7 Banner Engineering Corp Limited Warranty 62

Chapter 7 Product Support and Maintenance

7.1 Sure Cross® MultiHop Data Radio Documentation

For additional information, including installation and setup, weatherproofing, device menu maps, troubleshooting, and a list of accessories, refer to one of the following product manuals.

- MultiHop Data Radio Quick Start Guide: 152653
- MultiHop Data Radio Instruction Manual: 151317
- Sure Cross® Accessories List b_3147091
- Sure Cross® Installation Guide: 151514
- Conducting a Site Survey: 133602
- Power Solutions: FlexPower and Battery Life: 140386
- Power Solutions: Solar: 201843
- Antenna Basics: 132113
- Sensor Connections: 136214
- System Layouts: 133601
- Glossary of Wireless Terminology
- MultiHop Register Guide: 155289

The following manuals are for the configuration software:

- MultiHop Configuration Software Instruction Manual: 150473
- Sensor Configuration Software Instruction Manual: 170002

7.2 Verifying the Firmware Version of the MultiHop Radio

To verify the data radio's firmware version, you can use the MultiHop Configuration Software or the LCD menu system.

1. To use the MultiHop Configuration Software:
    a. Go to the **Device Config** tab.
    b. Under **Read Firmware Version**, click **From Device**.
2. To use the LCD menu system:
    a. Single-click button 1 to advance through the top-level menu until you reach ***FCTRY**.
    b. Within the ***FCTRY** menu, the values automatically display in a loop. Note the **RADIO FMVER** value that displays; this is your radio firmware version.

7.3 Maintenance

Follow these instructions to perform basic maintenance tasks.

7.3.1 Replacing the Main Body Gasket

Check the main body gasket after a Sure Cross device is opened.

Replace the gasket when it is damaged, discolored, or showing signs of wear. The gasket must be:

- Fully seated within its channel along the full length of the perimeter, and
- Positioned straight within the channel with no twisting, stress, or stretching.

© Banner Engineering Corp. All rights reserved.

Figure 18. Replacing the main body gasket



7.3.2 Replacing the Rotary Dial Access Cover

Check the rotary dial access cover o-ring every time the access cover is removed.

Replace the o-ring when it is damaged, discolored, or showing signs of wear. The o-ring should be:

- Seated firmly against the threads without stretching to fit or without bulging loosely, and
- Pushed against the flanged cover.

Figure 19. Replacing the rotary dial access cover



When removing or closing the rotary dial access cover, manually twist the cover into position. Do not allow cross-threading between the cover and the device's face. After the cover is in place and manually tightened, use a small screwdriver (no longer than five inches total length) as a lever to apply enough torque to bring the rotary dial access cover even with the cover surface.

7.3.3 Install or Replace the Battery for a DX81 Model

To replace the lithium D-cell battery in the FlexPower Supply Module, follow these steps.



1. Unplug the **DX81-LITH** or **DX81H** FlexPower Supply Module from the Sure Cross® device it powers.
2. Remove the four screws mounting the battery module face plate to the body and remove the face plate.
3. Remove the discharged battery by pressing the battery towards the negative terminal to compress the spring. Pry up on the battery's positive end to remove it from the battery holder.
4. Install the new battery or batteries.
5. Verify the battery's positive and negative terminals align to the positive and negative terminals of the battery holder mounted within the case. Caution: There is a risk of explosion if the battery is replaced incorrectly.
6. After replacing the battery, allow up to 60 seconds for the device to power up.
7. Properly dispose of your used battery according to local regulations by taking it to a hazardous waste collection site, an e-waste disposal center, or any other facility qualified to accept lithium batteries.

© Banner Engineering Corp. All rights reserved.
www.bannerengineering.com

For outside or high-humidity environments, dielectric grease may be applied to the battery terminals to prevent moisture and corrosion buildup.

As with all batteries, these are a fire, explosion, and severe burn hazard. Do not burn or expose them to high temperatures. Do not recharge, crush, disassemble, or expose the contents to water.

The battery may be replaced in explosive gas atmospheres.

For non-hazardous locations, the replacement battery is model **BWA-BATT-011**. For non-hazardous or hazardous locations, the replacement battery is Xeno model XL-205F, Banner model **BWA-BATT-001**. For pricing and availability, contact Banner Engineering.

WARNING:

- Potential electrostatic charging hazard — only clean with a damp cloth.
- The replacement battery MUST be a Banner-approved battery, model number **BWA-BATT-001**. Use of a different battery will VOID the intrinsic safety rating of this device and may result in an explosion!
- When replacing the battery, the negative end of the battery holder is the side with the spring terminal. This side is marked with a minus (−) sign.
- Do not attempt to recharge the battery. These batteries are not rechargeable. Recharging may cause serious injury to personnel or damage the equipment. Replace only with factory-recommended batteries.

7.3.4 Install or Replace the Battery for a DX80 Integrated Battery Model

To install or replace the 3.6 V lithium "D" cell battery in any model with a battery integrated into the housing, follow these steps.

1. Remove the four screws mounting the face plate to the housing and remove the face plate.
2. Remove the discharged battery.
3. Install the new battery, verifying the battery's positive and negative terminals align to the positive and negative terminals of the battery holder mounted within the case.
4. After installing the battery, allow up to 60 seconds for the device to power up.
5. Properly dispose of used batteries according to local regulations by taking it to a hazardous waste collection site, an e-waste disposal center, or another facility qualified to accept lithium batteries.

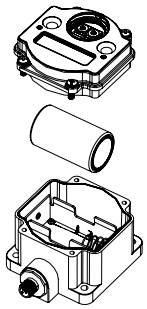

As with all batteries, these are a fire, explosion, and severe burn hazard. Do not burn or expose them to high temperatures. Do not recharge, crush, disassemble, or expose the contents to water.

For non-hazardous locations, the replacement battery is model **BWA-BATT-011**. For non-hazardous or hazardous locations, the replacement battery is Xeno model XL-205F, Banner model **BWA-BATT-001**. For pricing and availability, contact Banner Engineering.

CAUTION: There is a risk of explosion if the battery is replaced incorrectly.

© Banner Engineering Corp. All rights reserved.
www.bannerengineering.com

7.3.5 Install or Replace the Battery (DX99...D Models)

WARNING:

- Do not replace the battery when an explosive dust atmosphere may be present.
- The replacement battery MUST be a Banner-approved battery, model number **BWA-BATT-001**. Use of a different battery will VOID the intrinsic safety rating of this device and may result in an explosion!
- When replacing the battery, the negative end of the battery holder is the side by the large capacitors. This side is marked with a minus (−) sign.
- Do not attempt to recharge the battery. These batteries are not rechargeable. Recharging may cause serious injury to personnel or damage the equipment. Replace only with factory-recommended batteries.

To install or replace the lithium "D" cell battery in the metal housings, follow these steps.



1. Unscrew the lid of the metal enclosure.
2. Lift the radio out of the metal enclosure and pull the spacer frame off the back side of the radio.
3. Disconnect the radio by unplugging the ribbon cable from the radio board and set aside the radio and spacer frame.
4. If you are replacing an existing battery, remove the discharged battery.
5. Insert a new battery. Only use a 3.6 V lithium battery from Xeno, model number XL-205F.
6. Verify the battery's positive and negative terminals align to the positive and negative terminals of the battery holder mounted within the case. Caution: There is a risk of explosion if the battery is replaced incorrectly.
7. Wait two minutes.
8. Insert the ribbon cable through the center of the spacer frame, then plug the ribbon cable back into the radio board.
9. Insert the radio back onto the spacer frame pins. Push the radio and spacer frame assembly back into the enclosure until it is seated.
10. Screw on the lid and tighten.
11. After replacing the battery, allow up to 60 seconds for the device to power up.
12. Properly dispose of your used battery according to local regulations by taking it to a hazardous waste collection site, an e-waste disposal center, or other facility qualified to accept lithium batteries.

As with all batteries, these are a fire, explosion, and severe burn hazard. Do not burn or expose them to high temperatures. Do not recharge, crush, disassemble, or expose the contents to water.

The battery may be replaced in explosive gas atmospheres. Use replacement battery model number: BWA-BATT-001. For pricing and availability, contact Banner Engineering.

7.4 Sure Cross® Radio Certifications

Banner's Sure Cross product line is certified by the FCC, European Union, and many other countries for operation within specific radio frequencies.

7.4.1 FCC and ISED Certification for 900 MHz

This equipment contains transmitter module RM1809 or SX7023EXT.

Radio Module RM1809	Radio Module SX7023EXT
FCC ID: UE3RM1809	FCC ID: UE3SX7023EXT
IC: 7044A-RM1809	IC: 7044A-SX7023EXT
HVIN: RM1809	HVIN: 223150

FCC Notices

IMPORTANT: The transmitter modules RM1809 and SX7023EXT have been certified by the FCC / ISED for use with other products without any further certification (as per FCC section 2.1091). Changes or modifications not expressly approved by the manufacturer could void the user's authority to operate the equipment.

© Banner Engineering Corp. All rights reserved.
www.bannerengineering.com

IMPORTANT: The transmitter modules RM1809 and SX7023EXT have been certified for fixed base station and mobile applications. If modules will be used for portable applications, the device must undergo SAR testing.

IMPORTANT: If integrated into another product, the FCC ID label must be visible through a window on the final device or it must be visible when an access panel, door, or cover is easily removed. If not, a second label must be placed on the outside of the final device that contains the following text:

Transmitter Module [RM1809 or SX7023EXT]
Contains FCC ID: [UE3RM1809 or UE3SX7023EXT]
Contains IC: [7044A-RM1809 or 7044A-SX7023EXT]
HVIN: [RM1809 or 223150]

This device complies with Part 15 of the FCC Rules. This equipment generates, uses, and can radiate radio frequency energy and, if not installed and used in accordance with the instruction manual, may cause harmful interference to radio communications. Operation is subject to the following two conditions: 1) This device may not cause harmful interference; and 2) This device must accept any interference received, including interference that may cause undesired operation.

Antenna WARNING: This device has been tested with Reverse Polarity SMA connectors with the antennas listed in "Certified Antennas for 900 MHz" on page 60. When integrated into OEM products, fixed antennas require installation preventing end-users from replacing them with non-approved antennas. Antennas not listed in the tables must be tested to comply with FCC Section 15.203 (unique antenna connectors), FCC Section 15.247 (emissions), and ISED RSS-Gen Section 6.8.

FCC and ISED Approved Antennas

WARNING: Antenna(s) used for this transmitter must be installed to provide a separation distance of at least 20 cm from all persons.

AVERTISSEMENT : Les antennes utilisées pour cet émetteur doivent être installées de manière à assurer une distance de séparation d'au moins 20 cm de toutes les personnes.

NOTICE: This equipment is approved only for mobile and base station transmitting devices. The antenna(s) used for this transmitter must not transmit simultaneously with any other antenna or transmitter, except in accordance with FCC multi-transmitter product procedures.

The radio transmitter modules RM1809 and SX7023EXT have been approved by FCC and ISED Canada to operate with the antenna types listed below, with the maximum permissible gain indicated. Antenna types not included in this list that have a gain greater than the maximum gain indicated for any type listed are strictly prohibited for use with this device.

Table 17. Certified Antennas for 900 MHz

Model Number	Antenna Type	900 MHz Radio Module	Maximum Gain	Impedance	Minimum Required Cable/ Connector Loss
-	Integral Antenna	RM1809	Unity gain		0
BWA-9O1-x	Omni, 1/4 wave dipole	RM1809	≤2 dBi	50 Ω	0
BWA-9O2-C	Omni, 1/2 wave dipole, Swivel	RM1809 or SX7023EXT	≤2 dBi	50 Ω	0
BWA-9O6-A	Omni Wideband, Fiberglass Radome	RM1809	≤8.2 dBi	50 Ω	2.2 dB
BWA-9O5-B	Omni Base Whip	RM1809	≤7.2 dBi	50 Ω	1.2 dB
BWA-9Y10-A	Yagi	RM1809	≤10 dBi	50 Ω	4 dB
BWA-9O5-C	Coaxial sleeve	SX7023EXT	≤5 dBi	50 Ω	0
BWA-9O6-AS	Omni	SX7023EXT	≤6 dBi	50 Ω	0

7.4.2 FCC and ISED Certification for 2.4 GHz

This equipment contains transmitter module DX80-2400 or SX243.

Radio Module DX80-2400	Radio Module SX243
FCC ID: UE300DX80-2400	FCC ID: UE3SX243
IC: 7044A-DX8024	IC: 7044A-SX243
HVIN: DX80G2 / DX80N2	HVIN: SX243

FCC Notices

IMPORTANT: The transmitter modules DX80-2400 and SX243 have been certified by the FCC / ISED for use with other products without any further certification (as per FCC section 2.1091). Changes or modifications not expressly approved by the manufacturer could void the user's authority to operate the equipment.

© Banner Engineering Corp. All rights reserved.
www.bannerengineering.com

IMPORTANT: The transmitter modules DX80-2400 and SX243 have been certified for fixed base station and mobile applications. If modules will be used for portable applications, the device must undergo SAR testing.

IMPORTANT: If integrated into another product, the FCC ID/IC label must be visible through a window on the final device or it must be visible when an access panel, door, or cover is easily removed. If not, a second label must be placed on the outside of the final device that contains the following text:

Transmitter Module [DX80-2400 or SX243]
Contains FCC ID: [UE300DX80-2400 or UE3SX243]
Contains IC: [7044A-DX8024 or 7044A-SX243]
HVIN: [DX80G2, DX80N2 or SX243]

This device complies with Part 15 of the FCC Rules. This equipment generates, uses, and can radiate radio frequency energy and, if not installed and used in accordance with the instruction manual, may cause harmful interference to radio communications. Operation is subject to the following two conditions: 1) This device may not cause harmful interference; and 2) This device must accept any interference received, including interference that may cause undesired operation.

Antenna Warning: This device has been tested with Reverse Polarity SMA connectors with the antennas listed in "Certified Antennas for 2.4 GHz" on page 61. When integrated into OEM products, fixed antennas require installation preventing end-users from replacing them with non-approved antennas. Antennas not listed in the tables must be tested to comply with FCC Section 15.203 (unique antenna connectors), FCC Section 15.247 (emissions), and ISED RSS-Gen Section 6.8.

FCC and ISED Approved Antennas

AVERTISSEMENT : Les antennes utilisées pour cet émetteur doivent être installées de manière à assurer une distance de séparation d'au moins 20 cm de toutes les personnes.

NOTICE: This equipment is approved only for mobile and base station transmitting devices. The antenna(s) used for this transmitter must not transmit simultaneously with any other antenna or transmitter, except in accordance with FCC multi-transmitter product procedures.

The radio transmitter modules DX80-2400 and SX243 have been approved by FCC and ISED Canada to operate with the antenna types listed below, with the maximum permissible gain indicated. Antenna types not included in this list that have a gain greater than the maximum gain indicated for any type listed are strictly prohibited for use with this device.

Table 18. Certified Antennas for 2.4 GHz

Model	Antenna Type	2.4 GHz Radio Module	Maximum Gain	Impedance
	Integral antenna	DX80-2400 or SX243	Unity gain	
BWA-2O2-C	Omni, 1/2 wave dipole, Swivel	DX80-2400 or SX243	≤ 2 dBi	50 Ω
BWA-2O2-D	Omni, Dome, Box Mount	DX80-2400 or SX243	≤ 2 dBi	50 Ω
BWA-2O2-E	Omni, 1/4 wave dipole, Swivel	DX80-2400 or SX243	≤ 2 dBi	50 Ω
BWA-2O5-C	Omni, Collinear, Swivel	DX80-2400	≤ 5 dBi	50 Ω
BWA-2O5-MA	Omni, full-wave dipole, NMO	DX80-2400	≤ 4.5 dBi	50 Ω
BWA-2O6-A	Omni, Dome, Box Mount	DX80-2400	≤ 6 dBi	50 Ω
BWA-2O7-C	Omni, Coaxial Sleeve, Swivel	DX80-2400	≤ 7 dBi	50 Ω

7.4.3 Exporting Sure Cross® Radios

Exporting Sure Cross® Radios. It is our intent to fully comply with all national and regional regulations regarding radio frequency emissions. **Customers who want to re-export this product to a country other than that to which it was sold must ensure the device is approved in the destination country.** The Sure Cross wireless products were certified for use in these countries using the antenna that ships with the product. When using other antennas, verify you are not exceeding the transmit power levels allowed by local governing agencies. This device has been designed to operate with the antennas listed on Banner Engineering's website and having a maximum gain of 9 dBm. Antennas not included in this list or having a gain greater than 9 dBm are strictly prohibited for use with this device. The required antenna impedance is 50 ohms. To reduce potential radio interference to other users, the antenna type and its gain should be so chosen such that the equivalent isotropically radiated power (EIRP) is not more than that permitted for successful communication. Consult with Banner Engineering Corp. if the destination country is not on this list.

7.5 Contact Us

Banner Engineering Corp. | 9714 Tenth Avenue North | Plymouth, MN 55441, USA | Phone: + 1 888 373 6767

For worldwide locations and local representatives, visit www.bannerengineering.com.

© Banner Engineering Corp. All rights reserved.
www.bannerengineering.com

7.6 Warnings

WARNING:
- **Do not use this device for personnel protection**
- Using this device for personnel protection could result in serious injury or death.
- This device does not include the self-checking redundant circuitry necessary to allow its use in personnel safety applications. A device failure or malfunction can cause either an energized (on) or de-energized (off) output condition.

IMPORTANT: Please download the complete MultiHop Data Radio technical documentation, available in multiple languages, from www.bannerengineering.com for details on the proper use, applications, Warnings, and installation instructions of this device.

IMPORTANT: Por favor descargue desde www.bannerengineering.com toda la documentación técnica de los MultiHop Data Radio, disponibles en múltiples idiomas, para detalles del uso adecuado, aplicaciones, advertencias, y las instrucciones de instalación de estos dispositivos.

IMPORTANT: Veuillez télécharger la documentation technique complète des MultiHop Data Radio sur notre site www.bannerengineering.com pour les détails sur leur utilisation correcte, les applications, les notes de sécurité et les instructions de montage.

Install and properly ground a qualified surge suppressor when installing a remote antenna system. Remote antenna configurations installed without surge suppressors invalidate the manufacturer's warranty. Keep the ground wire as short as possible and make all ground connections to a single-point ground system to ensure no ground loops are created. No surge suppressor can absorb all lightning strikes; do not touch the Sure Cross® device or any equipment connected to the Sure Cross® device during a thunderstorm.

Exporting Sure Cross® Radios. It is our intent to fully comply with all national and regional regulations regarding radio frequency emissions. **Customers who want to re-export this product to a country other than that to which it was sold must ensure the device is approved in the destination country.** The Sure Cross wireless products were certified for use in these countries using the antenna that ships with the product. When using other antennas, verify you are not exceeding the transmit power levels allowed by local governing agencies. This device has been designed to operate with the antennas listed on Banner Engineering's website and having a maximum gain of 9 dBm. Antennas not included in this list or having a gain greater than 9 dBm are strictly prohibited for use with this device. The required antenna impedance is 50 ohms. To reduce potential radio interference to other users, the antenna type and its gain should be so chosen such that the equivalent isotropically radiated power (EIRP) is not more than that permitted for successful communication. Consult with Banner Engineering Corp. if the destination country is not on this list.

IMPORTANT:
- **Never operate a radio without connecting an antenna**
- Operating radios without an antenna connected will damage the radio circuitry.
- To avoid damaging the radio circuitry, never apply power to a Sure Cross® Performance or Sure Cross® MultiHop radio without an antenna connected.

IMPORTANT:
- **Electrostatic discharge (ESD) sensitive device**
- ESD can damage the device. Damage from inappropriate handling is not covered by warranty.
- Use proper handling procedures to prevent ESD damage. Proper handling procedures include leaving devices in their anti-static packaging until ready for use; wearing anti-static wrist straps; and assembling units on a grounded, static-dissipative surface.

7.7 Banner Engineering Corp Limited Warranty

Banner Engineering Corp. warrants its products to be free from defects in material and workmanship for one year following the date of shipment. Banner Engineering Corp. will repair or replace, free of charge, any product of its manufacture which, at the time it is returned to the factory, is found to have been defective during the warranty period. This warranty does not cover damage or liability for misuse, abuse, or the improper application or installation of the Banner product.

THIS LIMITED WARRANTY IS EXCLUSIVE AND IN LIEU OF ALL OTHER WARRANTIES WHETHER EXPRESS OR IMPLIED (INCLUDING, WITHOUT LIMITATION, ANY WARRANTY OF MERCHANTABILITY OR FITNESS FOR A PARTICULAR PURPOSE), AND WHETHER ARISING UNDER COURSE OF PERFORMANCE, COURSE OF DEALING OR TRADE USAGE.

This Warranty is exclusive and limited to repair or, at the discretion of Banner Engineering Corp., replacement. **IN NO EVENT SHALL BANNER ENGINEERING CORP. BE LIABLE TO BUYER OR ANY OTHER PERSON OR ENTITY FOR ANY EXTRA COSTS, EXPENSES, LOSSES, LOSS OF PROFITS, OR ANY INCIDENTAL, CONSEQUENTIAL OR SPECIAL DAMAGES RESULTING FROM ANY PRODUCT DEFECT OR FROM THE USE OR INABILITY TO USE THE PRODUCT, WHETHER ARISING IN CONTRACT OR WARRANTY, STATUTE, TORT, STRICT LIABILITY, NEGLIGENCE, OR OTHERWISE.**

Banner Engineering Corp. reserves the right to change, modify or improve the design of the product without assuming any obligations or liabilities relating to any product previously manufactured by Banner Engineering Corp. Any misuse, abuse, or improper application or installation of this product or use of the product for personal protection applications when the product is identified as not intended for such purposes will void the product warranty. Any modifications to this product

© Banner Engineering Corp. All rights reserved.

without prior express approval by Banner Engineering Corp will void the product warranties. All specifications published in this document are subject to change; Banner reserves the right to modify product specifications or update documentation at any time. Specifications and product information in English supersede that which is provided in any other language. For the most recent version of any documentation, refer to: www.bannerengineering.com.

For patent information, see www.bannerengineering.com/patents.

© Banner Engineering Corp. All rights reserved.

Index

A

analog input parameters 25
analog min/max 29
analog output parameters 29

B

baseline 30
baseline drift filter 30
battery parameters 32
binding radios 11

C

change of state 25
collocation 17
communication timeout 24
compensation median filter 30
continuous voltage 23, 28
counter input parameters 27
counter preset 27

D

default output parameters 24, 24
default output state 29, 29
default output state
  switch power 28
delta 30, 31, 25
device name 38
DIP switches 10
discrete input parameters 25
discrete output 29

E

enable register full scale 25
event/frequency counter 27
extended input read 23
extra inputs 22
extra outputs 22

F

factory default settings 30
flash 24

H

H-bridge parameters 28
hold last state 29, 29
hold last state
  switch power 28
host timeout 24
hysteresis 31, 25
hysteresis
  M-GAGE 30

I

input parameters 23
input parameters
  analog 25
  counter 27
  discrete 25
  SDI-12 32
  ultrasonic 31
inter-character timing 6

L

latch on change of state 25
low pass filter 30, 31

M

M-GAGE
  baseline 30
  baseline drift filter 30
  delta 30
  low-pass filter 30
  parameters 30
manufacturer parameters 38
max/min scale 31
maximum analog value 25
medium filter 25
minimum analog value 25
Modbus mode 5
Modbus server IDs 5
model numbers 38
MultiHop Radio ID 5

O

out of sync 24, 24, 23
output flash pattern 30
output parameters 24
output parameters
  analog 29
  discrete 29
  flash pattern 30
  H-bridge 28
  switch power 28

© Banner Engineering Corp. All rights reserved.
www.bannerengineering.com

P

packet routing 5
packet size 6
PNP or NPN 25
production date 38

S

sample high 25
sample high
  M-GAGE 30
sample high/low 31
sample interval 23
sample low 25
sample low
  M-GAGE 30
sample on demand 39
serial numbers 38
site survey
  interpreting results 13
software information 38
standard inputs 22
standard outputs 22
switch power inputs 23
switch power output 28
switch power voltage 23
switch power warm-up 23

T

tau filter 25
temperature 25
temperature scaling 25
thermocouple 25
threshold 31, 25
threshold
  M-GAGE 30
transparent mode 6

U

ultrasonic input parameters 31

© Banner Engineering Corp. All rights reserved.
www.bannerengineering.com

Glossary

baseline filter

Under normal conditions, the ambient magnetic field fluctuates. When the magnetic field readings drift below a threshold setting, the baseline or drift filter uses an algorithm to slowly match the radio device's baseline to the ambient magnetic field.

binding (multihop)

Binding MultiHop radios ensures all MultiHop radios within a network communicate only with other radios within the same network. The MultiHop client radio automatically generates a unique binding code when it enters binding mode. This code is transmitted to all radios within range that are also in binding mode. After a repeater/server radio is bound, the repeater/server radio accepts data only from the client radio to which it is bound. The binding code defines the network, and all radios within a network must use the same binding code.

boost voltage

A boost voltage circuit increases a battery-level voltage input (3.6 V DC) to a sensor operating voltage output (5 to 20 V DC).

change of state

A change of state (COS) is when an input signal switches from Run-to-Stop or Stop-to-Run state. Dual-channel input signals, have two possible configurable COS settings describe the signal disparity limits that can exist between channels before a fault condition is registered: simultaneous and concurrent. If simultaneity is a requirement or a concern for the application, users must ensure they made the correct selection during configuration.

collocated network

Collocated networks are radio networks located within the same geographical area. To prevent interference between collocated wireless networks, assign each wireless network a different Network ID. The Network ID is a unique identifier assigned to each wireless network by the Gateway.

event counter

The event counter counts the total number of times an input signal changes to the high/ON/1 state. The counter increments on the falling edge of an input signal when the signal level crosses the threshold. Event counters can be used to measure the total operational cycles of a spinning shaft or the total number of items traveling down a conveyor.

frequency counter

The frequency counter calculates the frequency of the input signal, in Hz. Frequency counters can be used to measure flow rates, such as measuring the flow rate of items on a conveyor or the speed at which a windmill spins.

median filter

When the median filter is turned on, three samples are taken for each analog sensor reading. The high and low values are discarded and the middle value is used as the analog value. Set to zero (0) to turn off the median filter. Set to one (1) to turn on the median filter.

network ID

The network ID (NID) is a unique identifier you assign to each wireless network to minimize the chances of two collocated networks interfering with each other. Assigning different NIDs to different networks improves collocation performance in dense installations. Network IDs were used when device IDs were assigned with the rotary dial. When using extended address (binding) mode, the binding code acts as the network ID.

sample high-sample low (analog)

For analog inputs, the sample high parameter defines the number of consecutive samples the input signal must be above the threshold before a signal is considered active. Sample low defines the number of consecutive samples the input signal must be below the threshold minus hysteresis before a signal is considered deactivated. The sample high and sample low parameters are used to avoid unwanted input transitions.

© Banner Engineering Corp. All rights reserved.

sample interval or sample rate

The sample interval, or rate, defines how often the Sure Cross device samples the input. For battery-powered applications, setting a slower rate extends the battery life.

sample on demand

Sample on demand allows a host system to send a Modbus command to a register and require the inputs to immediately sample the sensor and report readings back to the host system and/or Gateway. Sampling on demand can be used between the normal periodic reporting.

site survey

Conducting a site survey, also known as a radio signal strength indication (RSSI), analyzes the radio communications link between the client radio and any server radio within the network by analyzing the radio signal strength of received data packets and reporting the number of missed packets that required a retry.

switch power

Efficient power management technology enables some FlexPower devices to include an internal power output supply, called switch power (SP), that briefly steps up to power sensors. The warmup time denotes how long the sensor must be powered before a reliable reading can be taken. After the warmup time has passed, the input reads the sensor, then the switched power shuts off to prolong battery life.

threshold and hysteresis

Threshold and hysteresis work together to establish the ON and OFF points of an analog input. The threshold defines a trigger point or reporting threshold (ON point) for a sensor input. When the input value is higher than the threshold, the input is ON. Hysteresis defines how far below the threshold the analog input is required to be before the input is considered OFF. A typical hysteresis value is 10% to 20% of the unit's range. Setting threshold and hysteresis points prevents inputs from oscillating between 'on' and 'off' when the input remains close to the threshold point. In the example shown, the input is considered on at 15 mA. To consider the input off at 13 mA, set the hysteresis to 2 mA. The input will be considered off when the value is 2 mA less than the threshold.

© Banner Engineering Corp. All rights reserved.

LinkedIn

X

Facebook

Instagram



© 2026. All rights reserved.