SSA-EBxx-12ECQ8 Series Lighted Emergency Stop Push Button Product Manual

Features

Illuminated 30 mm Mount Electro-mechanical Push Buttons

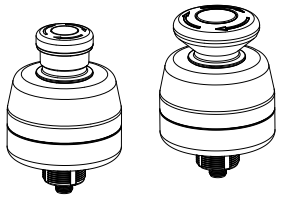

- Rugged design; easy installation with no assembly or individual wiring required
- Push-to-stop, twist-to-release, or pull-to-release operation per EN 60947-5-5
- Models with the washdown cover are push-to-stop and pull-to-release operation per EN 60947-5-5
- Latching design complies with ISO 13850; direct (positive) opening operation per EN 60947-5-1
- Compliant with ANSI B11.19, NFPA 79, and IEC/EN 60204-1 Emergency Stop requirements
- “Safe Break Action” ensures normally closed (NC) contacts will open if the contact block is separated from the actuator
- 8-pin M12 quick disconnect
- Models with yellow and red indication of actuation (armed or depressed/latched button)
- "Emergency Stop" legend included
- U.S. Patent No. Des. 700,149
- FDA-grade silicone cover withstands high pressure, high-temperature washdown, and increases the product rating to IP69; the cover is ECOLAB® certified to withstand aggressive cleaning procedures with chemicals used in the food processing industry

SSA-EB… series models are "mushroom-style" electro-mechanical emergency stop push buttons. When the button is armed, the switch's safety contacts (normally closed/NC) are closed and its monitoring contacts (normally open/NO), if present, are open. When the button is pushed, the switch's safety contacts open, and the monitoring contacts close. The contacts remain in this condition until the push button is manually rearmed by pulling or twisting clockwise the red push button actuator.

The SSA-EB1PL and -EB2PL Series Emergency Stop Button series has a 30 mm mounting base similar to Banner’s OTB, VTB, and STB Optical Touch Buttons for ease of mounting without requiring an additional enclosure. The EZ-LIGHT® illumination logic allows for easy identification of a pushed/actuated button. An armed button will light a steady yellow or green illumination or off (depending on model), a pushed/actuated button is indicated by a red illumination (flashing or solid depending on model). An optional input allows an armed button to illuminate a steady red to indicate a machine stop or emergency stop condition.

Models

Model	Push Button	EZ-LIGHT® Illumination Logic	Connection
SSA-EB1PL-12ECQ8	Standard 40 mm	OFF (armed), RED (solid, PUSH)	8-pin M12 quick disconnect
SSA-EB1PLXR-12ECQ8		OFF (armed), RED (flash, PUSH)	
SSA-EB1PLYR-12ECQ8		YELLOW (armed), RED (flash, PUSH)	
SSA-EB1PLGR-12ECQ8		GREEN (armed), RED (flash, PUSH)	
SSA-EB2PLXR-12ECQ8	Large 60 mm	OFF (armed), RED (flash, PUSH)	

Important... Read this before proceeding!

The user is responsible for satisfying all local, state, and national laws, rules, codes, and regulations relating to the use of this product and its application. Banner Engineering Corp. has made every effort to provide complete application, installation, operation, and maintenance instructions. Please contact a Banner Applications Engineer with any questions regarding this product.

The user is responsible for making sure that all machine operators, maintenance personnel, electricians, and supervisors are thoroughly familiar with and understand all instructions regarding the installation, maintenance, and use of this product, and with the machinery it controls. The user and any personnel involved with the installation and use of this product must be thoroughly familiar with all applicable standards, some of which are listed within the specifications. Banner Engineering Corp. makes no claim regarding a specific recommendation of any organization, the accuracy or effectiveness of any information provided, or the appropriateness of the provided information for a specific application.

WARNING:

- **Not a safeguarding device**
- Failure to follow these instructions could result in serious injury or death.
- This device is not considered a safeguarding device because it requires an overt action by an individual to stop machine motion or hazards. A safeguarding device limits or eliminates an individual's exposure to a hazard without action by the individual or others. This device cannot be substituted for required safeguarding. Refer to the applicable standards to determine those requirements.

Emergency Stop Considerations

NFPA 79, ANSI B11.19, IEC/EN 60204-1, and ISO 13850 specify emergency stop requirements, including the following:

Original Instructions
20-Feb-26

© Banner Engineering Corp. All rights reserved.
www.bannerengineering.com

162754
p/n: 162754 Rev. L

ПРОМЭЛЕКТРОНИКА/ sales@prom-elec.com

- Emergency-stop push buttons shall be located at each operator control station and at other operating stations where emergency shutdown is required.
- Stop and emergency-stop push buttons shall be continuously operable and readily accessible from all control and operating stations where located. Do not mute or bypass E-stop buttons.
- Actuators of emergency-stop devices shall be colored red. The background immediately around the device actuator shall be colored yellow (where possible). The actuator of a push-button-operated device shall be of the palm or mushroom-head type.
- The emergency-stop actuator shall be a self-latching type.

WARNING:
- **Do not mute or bypass any emergency stop device**
- Muting or bypassing the safety outputs renders the emergency stop function ineffective.
- ANSI B11.19, NFPA 79 and IEC/EN 60204-1 require that the emergency stop function remains active at all times.

WARNING:
- **Connect two or more devices to the same safety module (controller) in series**
- Connecting devices in parallel defeats the switch contact monitoring ability of the module and creates an unsafe condition that could result in serious injury or death.
- Failure to test each device individually in this manner could result in undetected faults and create an unsafe condition that could result in serious injury or death.
- Connect the contacts of the corresponding pole of each switch in series. Never connect the contacts of multiple switches in parallel. Individually actuate (engage) each device, then release (or re-arm) and reset the safety module. This allows the module to check each switch and its wiring to detect faults. Perform this check during the prescribed checkouts.

EU/UK Declaration of Conformity (DoC)

Banner Engineering Corp. herewith declares that these products are in conformity with the provisions of the listed directives and all essential health and safety requirements have been met. For the complete DoC, please go to www.bannerengineering.com.

Product	Directive
SSA-EB1PL and -EB2PL Series Emergency Stop Button	EU: Machinery Directive 2006/42/EC; Low Voltage Directive 2014/35/EU
	UKCA: Machinery (Safety) Regulation 2008; Electrical Equipment (Safety) Regulations 2016

Representative in EU: Spiros Lachandidis, Managing Director, **Banner Engineering BV** Park Lane | Culliganlaan 2F bus 3 | 1831 Diegem, BELGIUM

Representative in UK: Tony Coghlan, Managing Director, **Turck Banner LTD** Blenheim House | Blenheim Court | Wickford, Essex SS11 8YT | Great Britain

Installation and Maintenance

The device must not be affected by environmental conditions. **Install the device so that operation is not impeded, but should be protected against inadvertent operation** (for example, accidental actuation by being bumped or leaned against). Do not operate the switch using a tool. Do not expose the switch to excessive shocks and vibrations, otherwise the switch may be deformed or damaged, causing malfunction or operation failure. Hardware includes jam nut, lock washer, lock ring, and seal washer. The lock ring may be used to prevent switch rotation if a 5mm hole keyway is provided in the 30 mm mounting hole. The threaded base contains external M30 threads for the supplied jam nut, as well as internal 1/2-14 NPSM threads for an alternate mounting option.

© Banner Engineering Corp. All rights reserved.
www.bannerengineering.com

Mounting the E-stop

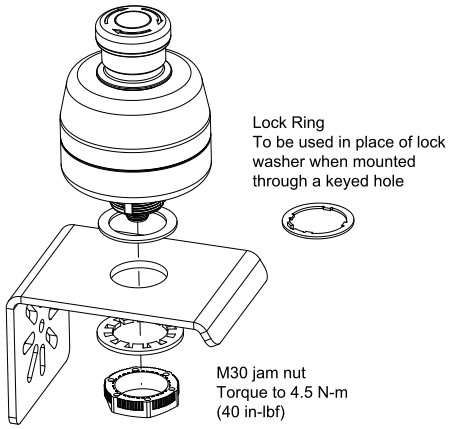

Electrical installation must be made by qualified personnel[1] and must comply with NEC (National Electrical Code), NFPA 79 or IEC/EN 60204-1, and all applicable local standards. It is not possible to give exact wiring instructions for a device that interfaces to a multitude of machine control configurations. The following is general in nature; it is recommended to perform a risk assessment to ensure appropriate application, interfacing/hookup, and risk reduction (see ISO 12100 or ANSI B11.0).

WARNING:

- **Risk of electric shock**
- Use extreme caution to avoid electrical shock. Serious injury or death could result.
- Always disconnect power from the safety system (for example, device, module, interfacing, etc.), guarded machine, and/or the machine being controlled before making any connections or replacing any component. Lockout/tagout procedures might be required. Refer to OSHA 29CFR1910.147, ANSI Z244-1, or the applicable standard for controlling hazardous energy.
- Make no more connections to the device or system than are described in this manual. Electrical installation and wiring must be made by a Qualified Person[2] and must comply with the applicable electrical standards and wiring codes, such as the NEC (National Electrical Code), NFPA 79, or IEC 60204-1, and all applicable local standards and codes.

Wiring

Pin	Color	Function	Connection and Pinout
1	White	AUX N.O. Output (Switched pin 2)	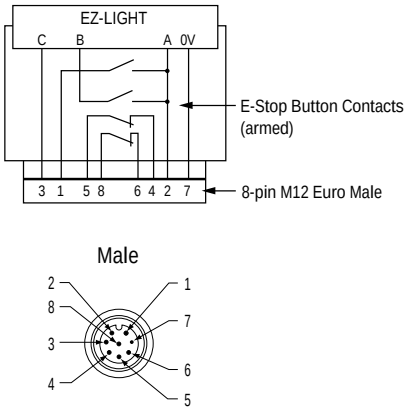
2	Brown	+24 V DC (12–30 V DC)	
3	Green	Stop Signal input from safety module or machine +24 V DC (12–30 V DC)	
4	Yellow	CH2a	
5	Gray	CH2b	
6	Pink	CH1a	
7	Blue	0 V DC	
8	Red	CH1b	

See "Figure: Illuminated models - example hookup" on page 5.

SSA-EB1xxLYR-xx or SSA-EB1xxLGR-xx

Situation	Indication	Illumination Logic
Button Armed Pin 3 open	YELLOW / SOLID or GREEN / SOLID	• Indicates button is armed • If used, ES-FA-11AA Module status is in a reset/run condition (31/32 open)

Continued on page 4

[1] A Qualified Person possesses a recognized degree or certificate or has extensive knowledge, training, and experience to solve problems relating to the emergency stop installation.
[2] A person who, by possession of a recognized degree or certificate of professional training, or who, by extensive knowledge, training and experience, has successfully demonstrated the ability to solve problems relating to the subject matter and work.

© Banner Engineering Corp. All rights reserved.
www.bannerengineering.com

Continued from page 3

Situation	Indication	Illumination Logic
Button Pushed Pin 3 open or +V DC	RED / FLASH	• Indicates the button is pushed (actuated) • Signal on Pin 3 has no effect on a button that has been pushed (actuated)
Button Armed Pin 3 = +V DC	RED / SOLID	• Indicates the machine is in an Emergency Stop or other stop condition, but that specific button has not been pushed (actuated) • This optional signal (12 to 30 V DC) allows the user to indicate a stop condition by turning the armed indication to red (steady) indication

See "Figure: Illuminated models - example hookup" on page 5.

SSA-EB1(2)xxLXR-xx

Situation	Indication	Illumination Logic
Button Armed Pin 3 open	OFF	• Indicates button is armed • If used, ES-FA-11AA Module status is in a reset/run condition (31/32 open)
Button Pushed Pin 3 open or +V DC	RED / FLASH	• Indicates the button is pushed (actuated) • Signal on Pin 3 has no effect on a button that has been pushed (actuated)
Button Armed Pin 3 = +V DC	RED / SOLID	• Indicates the machine is in an Emergency Stop or other stop condition, but that specific button has not been pushed (actuated) • This optional signal (12 to 30 V DC) allows the user to indicate a stop condition by turning the armed indication to red (steady) indication

See "Figure: Illuminated models - example hookup" on page 5.

SSA-EB1xxL-xx

Situation	Indication	Illumination Logic
Button Armed Pin 3 open	OFF	• Indicates button is armed • If used, ES-FA-11AA Module status is in a reset/run condition (31/32 open)
Button Pushed Pin 3 open or +V DC	RED / SOLID	• Indicates the button is pushed (actuated) • Signal on Pin 3 has no effect on a button that has been pushed (actuated)
Button Armed Pin 3 = +V DC	RED / SOLID	• Indicates the machine is in an Emergency Stop or other stop condition, but that specific button has not been pushed (actuated) • This optional signal (12 to 30 V DC) allows the user to indicate a stop condition by turning the armed indication to red (steady) indication

© Banner Engineering Corp. All rights reserved.
www.bannerengineering.com

Illuminated models - example hookup

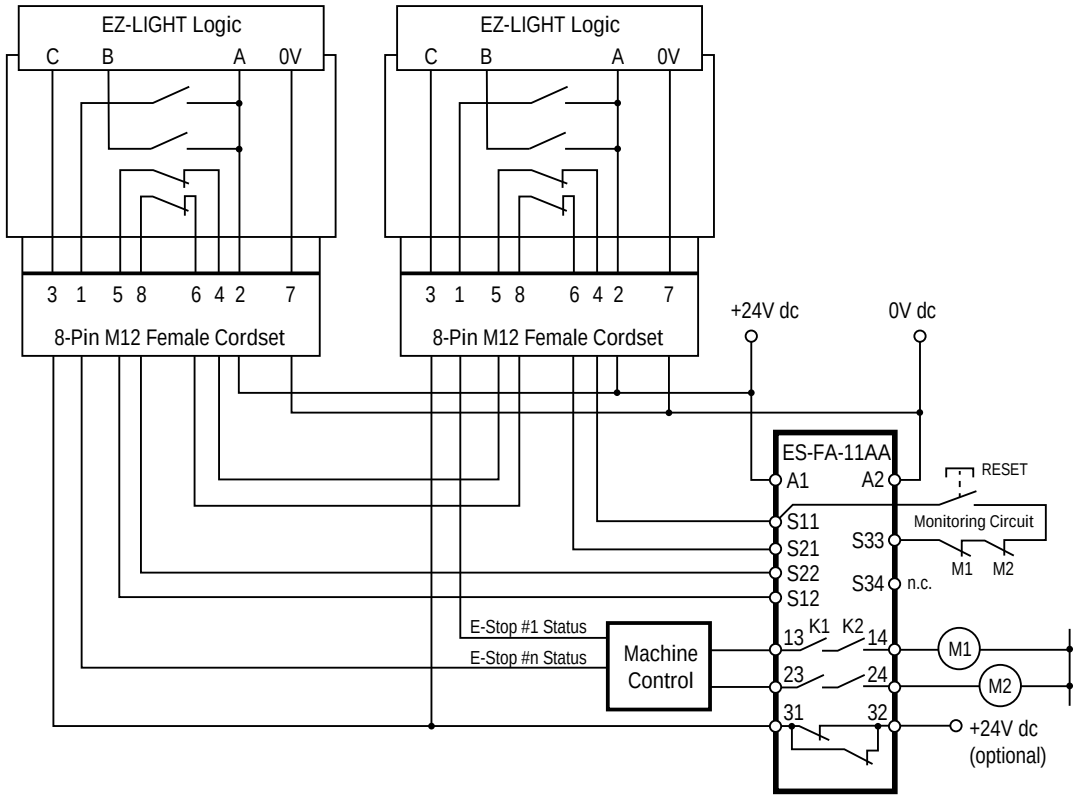

NOTE: Refer to the ES-FA-11AA E-Stop Safety Module datasheet (p/n 60606) for complete safety module installation information.

Checkout

At machine set up, a *Designated Person*[3] should test each safety point for proper machine shutdown response. A *Designated Person* should check the safety point for proper operation, physical damage, button looseness, and excessive environmental contamination. This should take place on a periodic schedule determined by the user, based on the severity of the operating environment and the frequency of switch actuations.

Adjust, repair, or replace components as needed. If inspection reveals contamination on the switch, thoroughly clean the switch and eliminate the cause of the contamination. Replace the switch and/or appropriate components when any parts or assemblies are damaged, broken, deformed, or badly worn; or if the electrical/mechanical specifications (for the environment and operating conditions) have been exceeded.

Always test the control system for proper functioning under machine control conditions after performing maintenance, replacing the safety point, or replacing any component of the device.

Install the Silicone Cover

To properly install the FDA-grade silicone cover and achieve an IP69 rating, follow these instructions.

1. Turn the cover inside-out, except for the top portion the button fits into.
2. Place the cover on top of the emergency stop unit.
3. Roll the cover onto the E-stop unit.
4. Continue rolling the cover down, around the base of the E-stop unit, until the entire unit is covered.
5. Mount the E-stop unit and cover assembly to a bracket wide enough to cover the assembly base. The cover should be clamped firmly between the E-stop unit and the bracket.



NOTE: This cover is suitable for applications with pull-to-release resetting methods.

[3] A *Designated Person* is identified in writing by the employer as being appropriately trained to perform a specified checkout procedure. A Qualified Person possesses a recognized degree or certificate or has extensive knowledge, training, and experience to solve problems relating to the emergency stop installation.

© Banner Engineering Corp. All rights reserved.
www.bannerengineering.com

NOTE: The FDA-grade silicone cover withstands high pressure, high-temperature washdown, and increases the product rating to IP69. The cover is ECOLAB® certified to withstand aggressive cleaning procedures with chemicals used in the food processing industry.

Specifications

Housing / Button
Polycarbonate / Polyamide
Threaded base has M30 by 1.5 external threads; Maximum Tightening Torque: 4.5 N·m (40 in·lbf)

Operating Conditions
–25 °C to +55 °C (–13 °F to +131 °F)
45% to 85% relative humidity (no condensation)

Environmental Rating
For Indoor Use Only
UL Type 4X and UL Type 13
IP65 (IEC 60529) and IP69 with SSA-EB1P-ECWC cover installed

Insulation Resistance
100 MΩ minimum (500 V DC megger)

Vibration Resistance
Operating extremes: 10 Hz to 500 Hz, amplitude 0.35 mm acceleration 50 m/s^2

LED Color
Yellow - 590 nm, Red - 618 nm, Green - 525 nm

LED Flash Rate
1.6 Hz at 50% duty cycle

LED Voltage/Current
SSA-EB1..LYR-.., SSA-EB1(2)..LXR-.., and SSA-EB1.. L-..: 12 V DC to 30 V DC; 120 mA at 12 V DC, 65 mA at 24 V DC, 60 mA at 30 V DC
SSA-EB1..LGR-..: 12 V DC to 30 V DC; 135 mA at 12 V DC, 75 mA at 24 V DC, 70 mA at 30 V DC

Impulse Withstand Voltage
2.5 kV

Pollution Degree
3

Output Configuration
See "Installation and Maintenance" on page 2

Overvoltage Category
II

Electrical Rating
Minimum load: 1 mA at 5 V AC/DC
SSA-EB1(2)xx-xxECQ8: 2A at 60 V AC / 75 V DC maximum
UL Applications: 1.5 A at 250 V AC, 1 A at 30 V DC (pilot duty)
CE Applications: AC-15: 1.5 A at 250 V AC, DC-13: 1 A at 30 V DC

Shock Resistance
Operating extremes: 150 m/s^2 (15G)

Rated Insulation Voltage (Ui)
60 V AC / 75 V DC

Contact Material/Bounce[4]
Gold plated silver / 20 ms

Electrical Life
100,000 operations minimum, 250,000 operations minimum at 24 V AC/DC, 100 mA

[4] When the button is reset, the normally closed contacts will chatter. When pressing the button, the normally open contacts will chatter. When designing a control circuit, take the contact chatter time into consideration. Do not expose the switch to external shocks, otherwise the contacts will bounce.

Mechanical Life
250,000 operations

Rated Current (Ith)
2A

B10d
100,000 (based on ISO13849-1)

Date code format (U.S. Standard Format)
YYWWX: 2-digit year, 2-digit week, "X" internal code

Design and Application Standards
Compliant with EN 60497-1 / -5-1, ISO 13850, ANSI B11.19, ANSI NFPA79, IEC/EN 60204-1

Certifications

Banner Engineering BV
Park Lane, Culliganlaan 2F bus 3
1831 Diegem, BELGIUM

Turck Banner LTD Blenheim House
Blenheim Court
Wickford, Essex SS11 8YT
GREAT BRITAIN

Required Overcurrent Protection

WARNING: Electrical connections must be made by qualified personnel in accordance with local and national electrical codes and regulations.

Overcurrent protection is required to be provided by end product application per the supplied table.
Overcurrent protection may be provided with external fusing or via Current Limiting, Class 2 Power Supply.
Supply wiring leads < 24 AWG shall not be spliced.
For additional product support, go to www.bannerengineering.com.

Supply Wiring (AWG)	Required Overcurrent Protection (A)	Supply Wiring (AWG)	Required Overcurrent Protection (A)
20	5.0	26	1.0
22	3.0	28	0.8
24	2.0	30	0.5

© Banner Engineering Corp. All rights reserved.
www.bannerengineering.com

Rated Operating Current and Voltage (Ue)

Safety Contact (N.C.)		30 V	60 V AC/75 V DC
AC 50/60 Hz	Resistive Load (AC-12)	-	2 A
	Inductive Load (AC-15)	-	2 A
DC	Resistive Load (DC-12)	2 A	0.4 A
	Inductive Load (DC-13)	1 A	0.22 A

Auxiliary Output (N.O.)		30 V	60 V AC/75 V DC
12 to 30 V DC (from supply pin 2)	Resistive Load (DC-12)	0.25 A	n.a.
	Inductive Load (DC-13)	0.25 A	n.a.

The operating current is classified according to EN 60947-5-1 making and breaking capacities and are measured at resistive/inductive load types specified in EN 60947-5-1. See "Electrical Rating" above for specific model and UL/CE maximum ratings.

Dimensions

All measurements are listed in millimeters [inches], unless noted otherwise. The measurements provided are subject to change.

Standard 40 mm Pushbutton

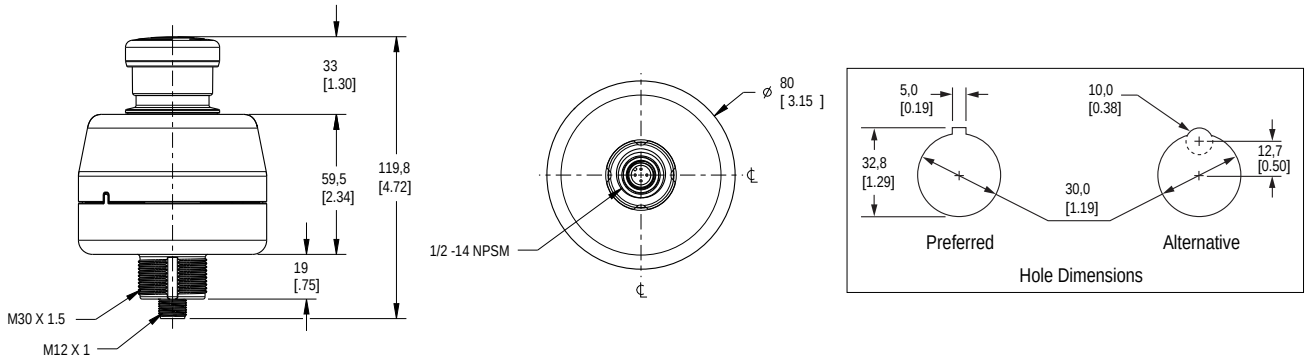

Large 60 mm Pushbutton

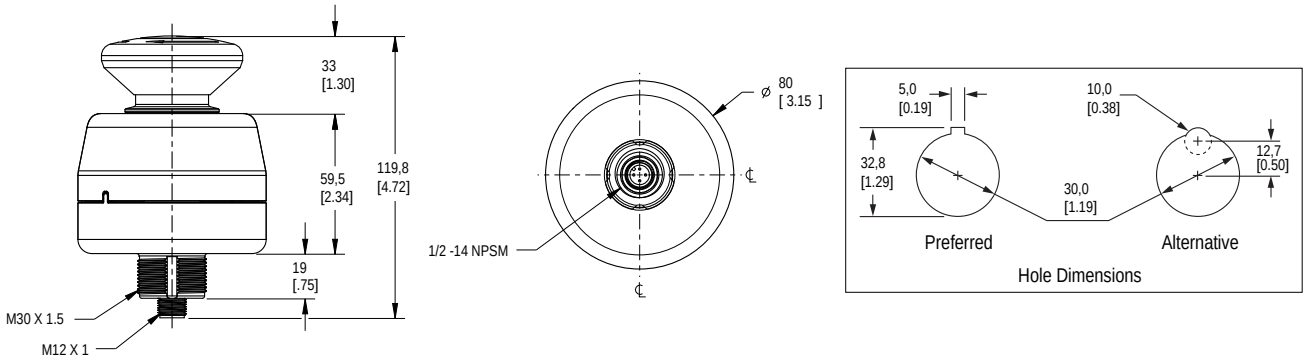

Accessories

Mounting Brackets

SSA-MBK-EEC1

- Single 30 mm hole
- 8 gauge steel, black finish (powder coat)
- Front surface for customer-applied labels
- CAD Files: DXF, PDF, IGS, STP

Hole size: A = ø 7 , B = ø 30

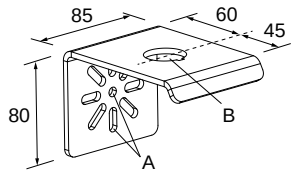

© Banner Engineering Corp. All rights reserved.
www.bannerengineering.com

SSA-MBK-EEC2
- Two 30 mm holes
- 8 gauge steel, black finish (powder coat)
- Front surface for customer-applied labels
- CAD Files: DXF, PDF, IGS, STP

Hole size: A = ø 7 , B = ø 30

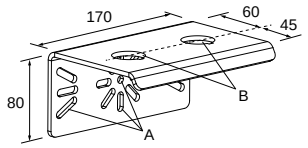

SSA-MBK-EEC3
- Three 30 mm holes
- 8 gauge steel, black finish (powder coat)
- Front surface for customer-applied labels
- CAD Files: DXF, PDF, IGS, STP

Hole size: A = ø 7 , B = ø 30

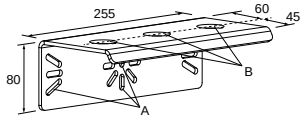

SSA-MBK-EEC1-SS
- Single 30 mm hole
- 8 gauge 316 stainless steel
- Front surface for customer-applied labels
- CAD Files: DXF, PDF, IGS, STP

Hole size: A = ø 7 , B = ø 30

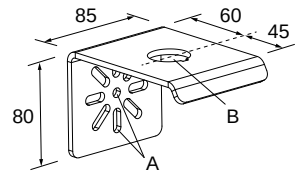

The SSA-MBK-EECx brackets offer:
- Horizontal and vertical (post) mounting
- Interchangeable positions of mounted devices (e.g. OTB/STB/VTB, E-Stop, K50s)

Cordsets

8-pin A-Code Single-Ended M12 Female Cordsets (datasheet p/n 235941)

Model	Length	Dimensions (mm)	Pinout (Female)	
BC-M12F8-24-1	1 m (3.28 ft)	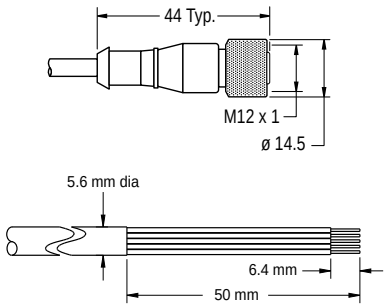	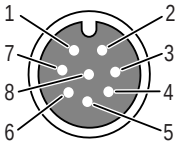	1 = White 2 = Brown 3 = Green 4 = Yellow 5 = Gray 6 = Pink 7 = Blue 8 = Red
BC-M12F8-24-2	2 m (6.56 ft)			
BC-M12F8-24-5	5 m (16.4 ft)			
BC-M12F8-24-10	10 m (30.81 ft)			

8-Pin Double-Ended M12 Female to M12 Male Cordsets

Model (8-pin/8-pin)	Length	Style	Dimensions	Pinout
DEE2R-81D	0.3 m (1 ft)	Female Straight/ Male Straight	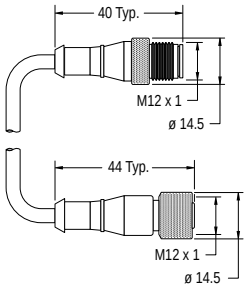	Female 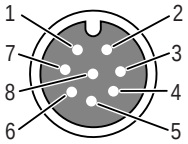 Male 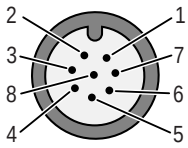
DEE2R-83D	0.91 m (3 ft)			
DEE2R-88D	2.44 m (8 ft)			
DEE2R-815D	4.57 m (15 ft)			
DEE2R-825D	7.62 m (25 ft)			
DEE2R-850D	15.24 m (50 ft)			
DEE2R-875D	22.86 m (75 ft)			

Continued on page 9

© Banner Engineering Corp. All rights reserved.
www.bannerengineering.com

Continued from page 8

8-Pin Double-Ended M12 Female to M12 Male Cordsets					
Model (8-pin/8-pin)	**Length**	**Style**	**Dimensions**	**Pinout**	
DEE2R-8100D	30.48 m (100 ft)			1 = Brown 2 = Orange/Black 3 = Orange 4 = White	5 = Black 6 = Blue 7 = Green/Yellow 8 = Violet

See Banner Engineering catalog or go to www.bannerengineering.com for additional models and complete information.

Series Connection Cordset Solution

This interconnection solution allows for quick wiring of a series of string emergency stop buttons. For the models listed below, Branch #1 and Branch #2 are 300 mm (12 in) in length and the length of the trunk is listed below.

WARNING:

- **Do not defeat the cordset installation**
- Defeating the series connection cordset solution could result in serious injury or death.
- Install the CSS series connection cordset solution so they cannot be easily defeated. Ensure that mounting and routing of the cordsets that are connected to the Trunk, Branch #1, Branch #2, and the E-Stop QD connector does not allow access to the QD connectors or allow improper connection bypassing the function of the Emergency Stop.

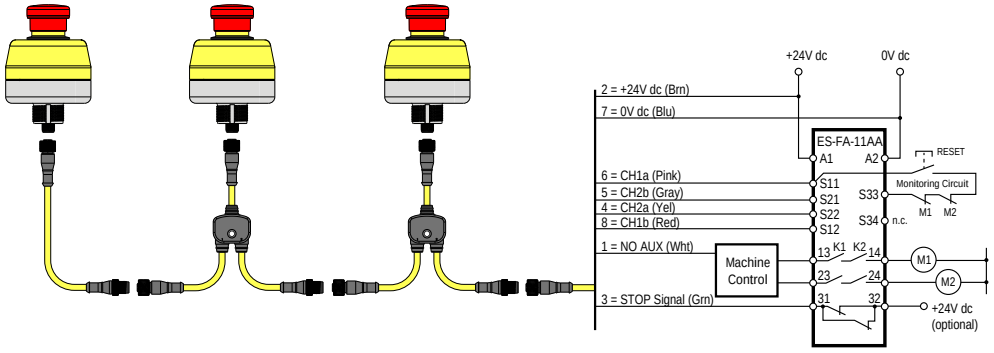

Model	Length	Description
CSS-M12F81M12M81M12F81	1 ft	8-pin M12 QD splitter cordset for use with SSA-EB1PLxR-12ECQ8
CSS-M12F83M12M81M12F81	3 ft	
CSS-M12F88M12M81M12F81	8 ft	

Continued on page 10

© Banner Engineering Corp. All rights reserved.
www.bannerengineering.com

Continued from page 9

Model	Length	Description

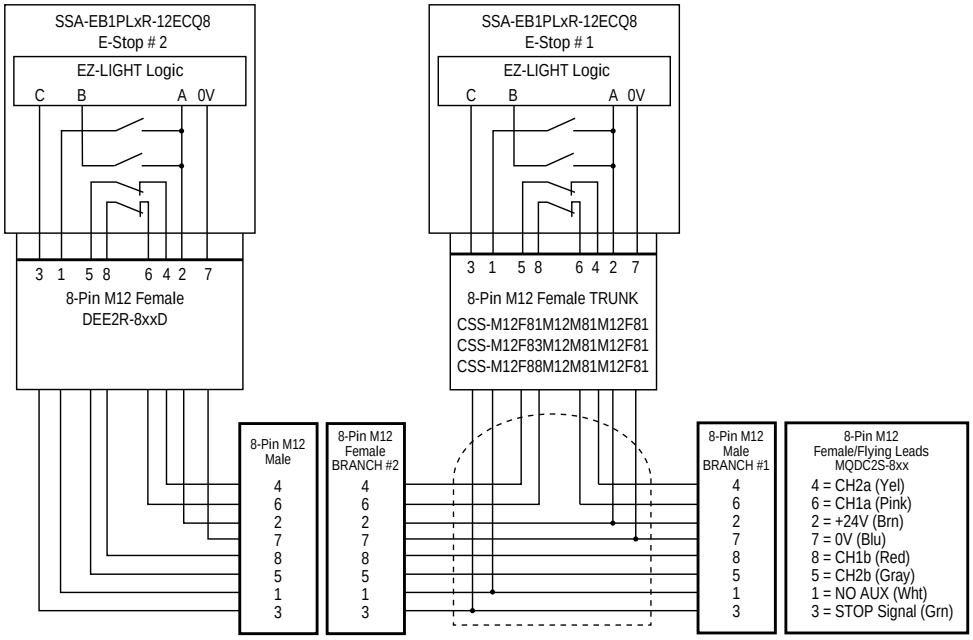

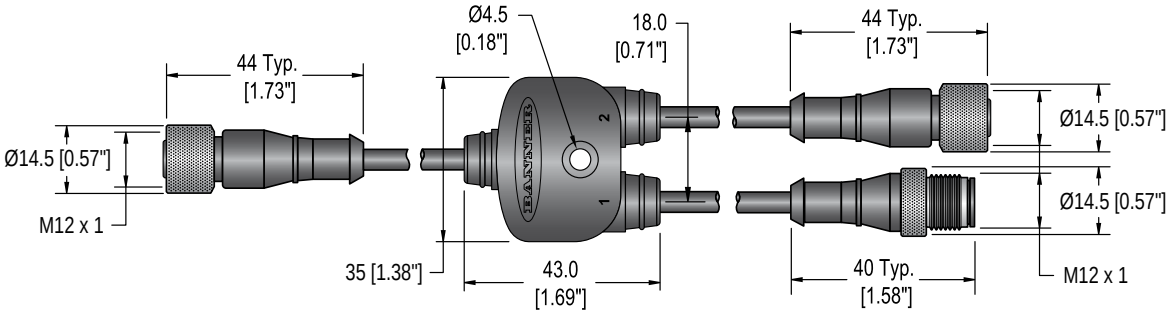

Washdown Silicone Cover SSA-EB1P-ECWC

To order a model with the washdown cover installed, add "**-WC**" to the model number. For example, **SSA-EB1PLYR-12ECQ8-WC**.

Washdown Cover Model	For Push Button Models	Description
SSA-EB1P-ECWC	Standard 40 mm	FDA-grade silicone cover

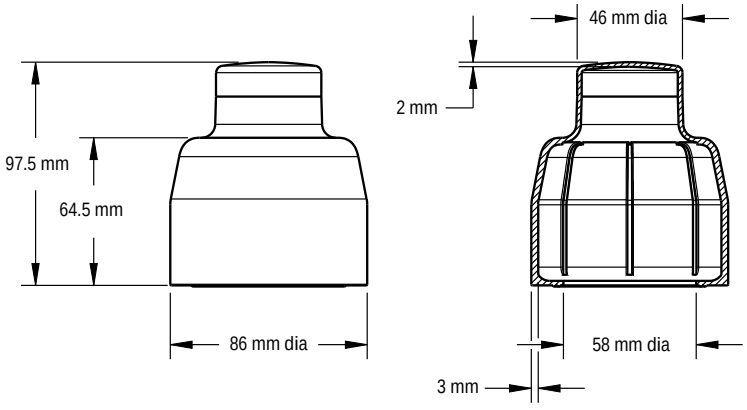

© Banner Engineering Corp. All rights reserved.
www.bannerengineering.com

Pre-Installed Shroud

To order a unit with a shroud (model **ESC-1-YW**) pre-installed, the model number has an S1 inserted after the LED color characters (for example **SSA-EB1PLYR-12ECQ8** becomes **SSA-EB1PLYRS1-12ECQ8**). Contact Banner Engineering for availability.

SSA-EB1PLxx-12ECQ8 E-Stop with a Shroud

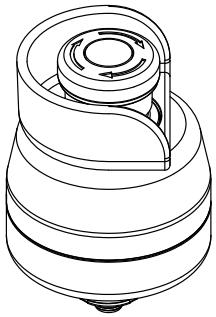

Dimensions for the SSA-EB1PLxx-12ECQ8 E-stop button with shroud

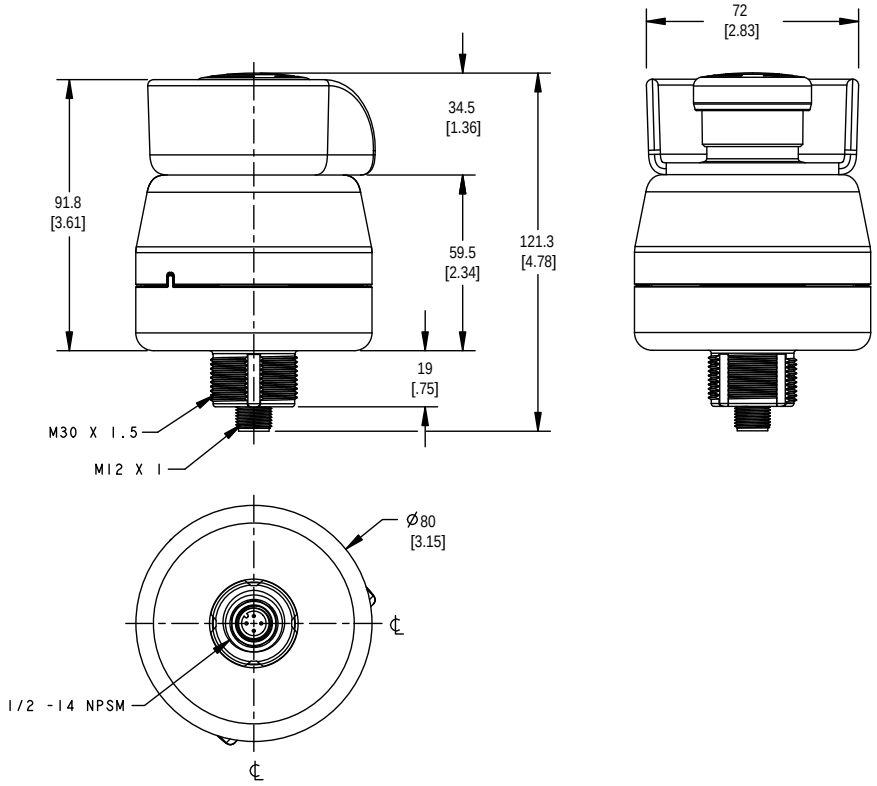

Product Support and Maintenance

Repairs and Translations

Contact Banner Engineering for troubleshooting of this device. **Do not attempt any repairs to this Banner device; it contains no field-replaceable parts or components.** If the device, device part, or device component is determined to be defective by a Banner Applications Engineer, they will advise you of Banner's RMA (Return Merchandise Authorization) procedure.

> **IMPORTANT:** If instructed to return the device, pack it with care. Damage that occurs in return shipping is not covered by warranty.

Obtain assistance with product repairs by contacting your local Banner Engineering Corp distributor or by calling Banner directly at (763) 544-3164. Access literature translated into your native language on the Banner website at www.bannerengineering.com or contact Banner directly at (763) 544-3164.

Para reparaciones de productos, por favor contacte a su distribuidor local de Banner Engineering o llame a Banner directamente al 00 1 (763) 544-3164. Vea la literatura traducida en su idioma en el sitio web Banner en www.bannerengineering.com o comuníquese con Banner directamente al 00 1 (763) 544-3164.

Pour vous aider lors de la réparation de produits, contactez votre distributeur Banner local our appelez directement Banner au (763) 544-3164. La documentation traduite dans votre langue est disponible sur le site internet de Banner www.bannerengineering.com ou contactez directement Banner au (763) 544-3164.

请联系当地的 Banner Engineering Corp 经销商或直接致电 Banner +1 (763) 544-3164，以获得产品维修帮助。请访问邦纳网站 www.bannerengineering.com 或直接拨打 +1 (763) 544-3164 联系邦纳，获取翻译成您母语的资料。

제품 수리에 대한 지원은 지역 Banner Engineering Corp 대리점에 문의하거나 Banner에 직접 (763) 544-3164로 문의하실 수 있습니다. 사용자의 모국어로 번역된 자료는 Banner 웹사이트 www.bannerengineering.com에서 액세스하거나 Banner에 직접 (763) 544-3164로 문의하실 수 있습니다.

© Banner Engineering Corp. All rights reserved.
www.bannerengineering.com

Contact Us

Banner Engineering Corp. | 9714 Tenth Avenue North | Plymouth, MN 55441, USA | Phone: + 1 888 373 6767

For worldwide locations and local representatives, visit www.bannerengineering.com.

Banner Engineering Corp Limited Warranty

Banner Engineering Corp. warrants its products to be free from defects in material and workmanship for one year following the date of shipment. Banner Engineering Corp. will repair or replace, free of charge, any product of its manufacture which, at the time it is returned to the factory, is found to have been defective during the warranty period. This warranty does not cover damage or liability for misuse, abuse, or the improper application or installation of the Banner product.

THIS LIMITED WARRANTY IS EXCLUSIVE AND IN LIEU OF ALL OTHER WARRANTIES WHETHER EXPRESS OR IMPLIED (INCLUDING, WITHOUT LIMITATION, ANY WARRANTY OF MERCHANTABILITY OR FITNESS FOR A PARTICULAR PURPOSE), AND WHETHER ARISING UNDER COURSE OF PERFORMANCE, COURSE OF DEALING OR TRADE USAGE.

This Warranty is exclusive and limited to repair or, at the discretion of Banner Engineering Corp., replacement. **IN NO EVENT SHALL BANNER ENGINEERING CORP. BE LIABLE TO BUYER OR ANY OTHER PERSON OR ENTITY FOR ANY EXTRA COSTS, EXPENSES, LOSSES, LOSS OF PROFITS, OR ANY INCIDENTAL, CONSEQUENTIAL OR SPECIAL DAMAGES RESULTING FROM ANY PRODUCT DEFECT OR FROM THE USE OR INABILITY TO USE THE PRODUCT, WHETHER ARISING IN CONTRACT OR WARRANTY, STATUTE, TORT, STRICT LIABILITY, NEGLIGENCE, OR OTHERWISE.**

Banner Engineering Corp. reserves the right to change, modify or improve the design of the product without assuming any obligations or liabilities relating to any product previously manufactured by Banner Engineering Corp. Any misuse, abuse, or improper application or installation of this product or use of the product for personal protection applications when the product is identified as not intended for such purposes will void the product warranty. Any modifications to this product without prior express approval by Banner Engineering Corp will void the product warranties. All specifications published in this document are subject to change; Banner reserves the right to modify product specifications or update documentation at any time. Specifications and product information in English supersede that which is provided in any other language. For the most recent version of any documentation, refer to: www.bannerengineering.com.

For patent information, see www.bannerengineering.com/patents.

Standards and Regulations

The list of standards below is included as a convenience for users of this Banner device. Inclusion of the standards below does not imply that the device complies specifically with any standard, other than those specified in the Specifications/Design Standards section of this manual. See the American National Standards Institute (ANSI) at https://webstore.ansi.org/ or another source for applicable documents.

Applicable U.S. Standards

Not inclusive

ANSI B11 Standards for Machine Tools Safety

ANSI/RIA R15.06 Safety Requirements for Industrial Robots and Robot Systems

NFPA 79 Electrical Standard for Industrial Machinery

ANSI/PMMI B155.1 Package Machinery and Packaging-Related Converting Machinery — Safety Requirements

ANSI/ASSP Z244.1-2024 The Control of Hazardous Energy – Lockout, Tagout, and Alternative Methods

OSHA 29 CFR 1910 Occupational Safety and Health Standards

Applicable European and International Standards

Not Inclusive

ISO 12100 Safety of Machinery – General Principles for Design – Risk Assessment and Risk Reduction

EN 60204-1 Electrical Equipment of Machines Part 1: General Requirements

ISO 13849-1 Safety of Machinery – Safety-Related Parts of Control Systems – Part 1: General Principles for Design

IEC 61508 Functional Safety of Electrical/Electronic/Programmable Electronic Safety-Related Systems

IEC 62061 Safety of Machinery – Functional Safety of Safety-Related Control Systems

ISO 13850 Emergency Stop Devices, Functional Aspects – Principles for Design

EN 13855 The Positioning of Protective Equipment in Respect to Approach Speeds of Parts of the Human Body

ISO 13857 Safety of Machinery – Safety Distances to Prevent Hazard Zones Being Reached

ISO 14119 Interlocking Devices Associated with Guards – Principles for Design and Selection

ISO 14120 Safety of machinery – Guards – General requirements for the design and construction of fixed and movable guards

Acquire a type C standard for your specific machinery.

© Banner Engineering Corp. All rights reserved.
www.bannerengineering.com