MODEL NO.	"L"	P/N
PBFM430U	10000 [394]	93733
PBFM415U	5000 [197]	61214
PBFM46U	2000 [79]	39110

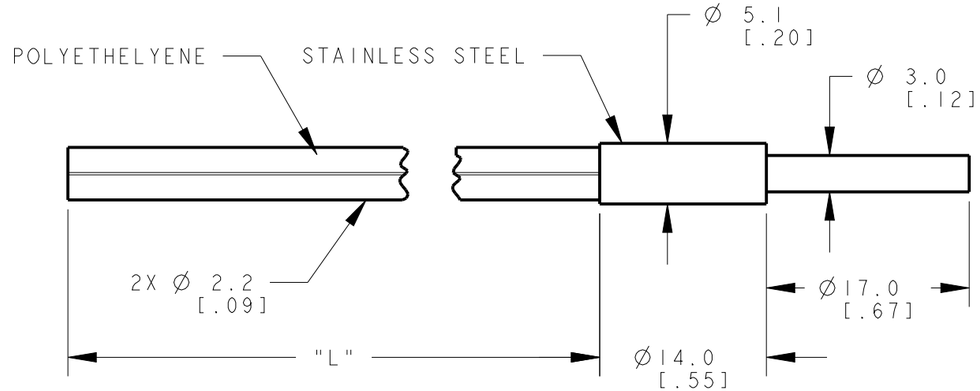

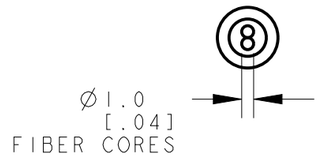

NOTES:
1. ALL DIMENSIONS ARE MILLIMETERS [INCHES] UNLESS OTHERWISE NOTED.
2. REFER TO "www.bannerengineering.com" FOR ADDITIONAL DATA AND SPECIFICATIONS.

This drawing is the property of BANNER ENGINEERING CORP. Any use or reproduction, in any form, without prior written permission of Banner is prohibited.
© 2015 Banner Engineering Corp.

THIRD ANGLE PROJECTION

BANNER ENGINEERING CORP.
www.bannerengineering.com

TITLE

PBFM4 SERIES UNTERMINATED

SIZE	DRAWING NO.	REV.
B	188739	A
SCALE 2:1		SHEET 1 OF 1

CREO

ПРОМЭЛЕКТРОНИКА/ sales@prom-elec.com