# BT1xS and BT2xS Series Glass Fibers

*BT1xS and BT2xS Series Glass Fibers*

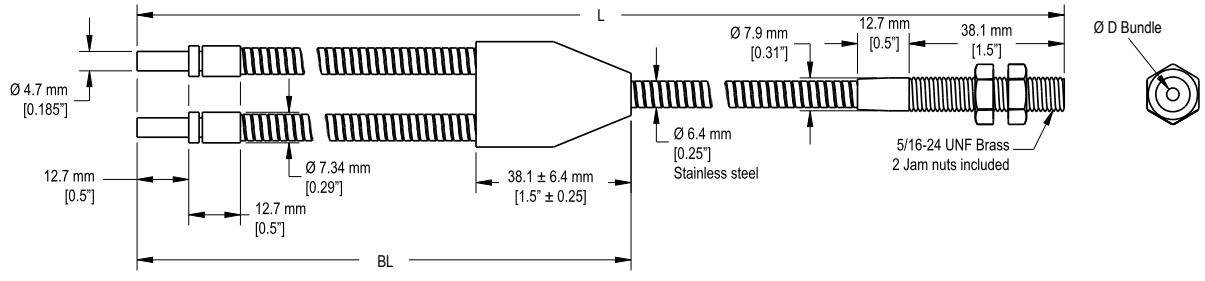


CAD files: DXF, PDF, IGS, STP

| Model | L (in) | BL (in) | D (in) |
|---|---|---|---|
| **BT.753S** | 36 | 7.5 ± 0.5 | 0.046 |
| **BT.756S** | 72 | 7.5 ± 0.5 | 0.046 |
| **BT12S** | 24 | 7.5 ± 0.5 | 0.062 |
| **BT13S** | 36 | 7.5 ± 0.5 | 0.062 |
| **BT13SM900** | 36 | 7.5 ± 0.5 | 0.062 |
| **BT14S** | 48 | 7.5 ± 0.5 | 0.062 |
| **BT15S** | 60 | 7.5 ± 0.5 | 0.062 |
| **BT16S** | 72 | 7.5 ± 0.5 | 0.062 |
| **BT21S** | 12 | 7.5 ± 0.5 | 0.125 |
| **BT21.3S** | 15 | 7.5 ± 0.5 | 0.125 |
| **BT21.5S** | 18 | 7.5 ± 0.5 | 0.125 |
| **BT21.5SM900** | 18 | 7.5 ± 0.5 | 0.125 |
| **BT22S** | 24 | 7.5 ± 0.5 | 0.125 |
| **BT23S** | 36 | 7.5 ± 0.5 | 0.125 |
| **BT23SM600** | 36 | 7.5 ± 0.5 | 0.125 |
| **BT23SM900** | 36 | 7.5 ± 0.5 | 0.125 |
| **BT24S** | 48 | 7.5 ± 0.5 | 0.125 |
| **BR24.5S** | 54 | 7.5 ± 0.5 | 0.125 |
| **BT24SM900** | 48 | 7.5 ± 0.5 | 0.125 |
| **BT25S** | 60 | 7.5 ± 0.5 | 0.125 |
| **BT25SM900** | 60 | 7.5 ± 0.5 | 0.125 |
| **BT26S** | 72 | 7.5 ± 0.5 | 0.125 |
| **BT26SM600** | 72 | 7.5 ± 0.5 | 0.125 |
| **BT26SM900** | 72 | 7.5 ± 0.5 | 0.125 |
| **BT27S** | 84 | 7.5 ± 0.5 | 0.125 |
| **BT28S** | 96 | 7.5 ± 0.5 | 0.125 |
| **BT29S** | 108 | 7.5 ± 0.5 | 0.125 |
| **BT210S** | 120 | 7.5 ± 0.5 | 0.125 |
| **BT210SM600** | 120 | 7.5 ± 0.5 | 0.125 |
| **BT210SM900** | 120 | 7.5 ± 0.5 | 0.125 |

Continued on page 2

Original Instructions
12-Aug-26

© Banner Engineering Corp. All rights reserved.
www.bannerengineering.com

b_51965812
p/n: b_51965812 Rev. B

ПРОМЭЛЕКТРОНИКА/ sales@prom-elec.com

Continued from page 1

| Model | L (in) | BL (in) | D (in) |
|---|---|---|---|
| **BT212S** | 144 | 7.5 ± 0.5 | 0.125 |
| **BT214SM900** | 168 | 7.5 ± 0.5 | 0.125 |
| **BT215S** | 180 | 7.5 ± 0.5 | 0.125 |
| **BT217S** | 204 | 7.5 ± 0.5 | 0.125 |
| **BT220S** | 240 | 7.5 ± 0.5 | 0.125 |
| **BT220SM900** | 240 | 7.5 ± 0.5 | 0.125 |
| **BT225SM600** | 300 | 7.5 ± 0.5 | 0.125 |
| **BT230SM600** | 360 | 7.5 ± 0.5 | 0.125 |

An M900 suffix at the end of a part number indicates a fiber bundle fused together on the threaded end (no epoxy used). The maximum operating temperature is 900 °F.

*BT16SMTGRMLSD and BT16SMTGRSSLLD Glass Fibers*

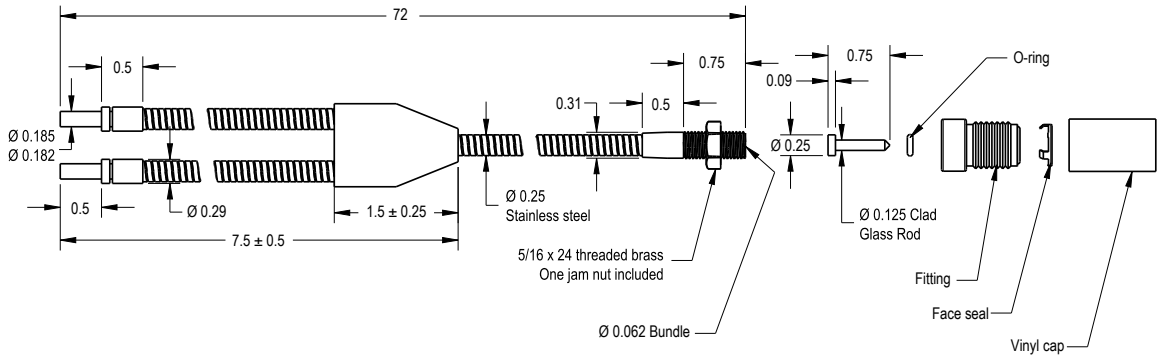


# BT2.5xx Series Glass Fibers

*BT2.5xS Glass Fibers*

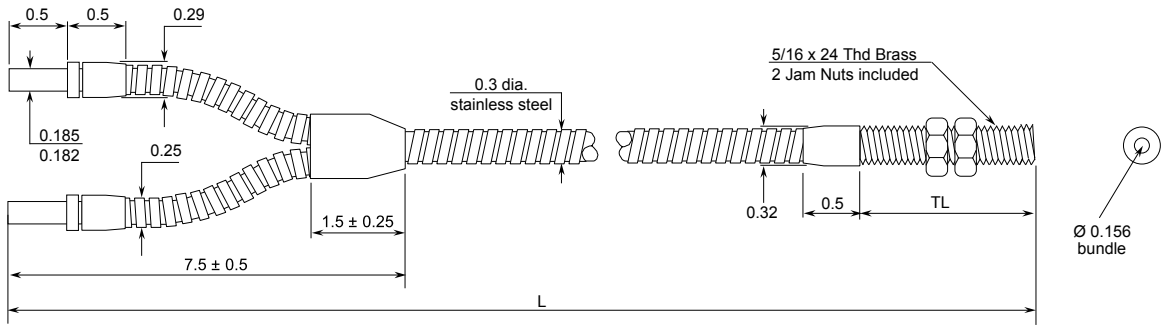


| Model | TL (in) | L (in) |
|---|---|---|
| **BT2.52S** | 1.5 | 24 |
| **BT2.53S** | 1.5 | 36 |
| **BT2.53SM900** | 1.5 | 36 |

An M900 suffix at the end of a part number indicates a fiber bundle fused together on the threaded end (no epoxy used). The maximum operating temperature is 900 °F.


© Banner Engineering Corp. All rights reserved.
www.bannerengineering.com

*BT2.5xP Series Glass Fibers*

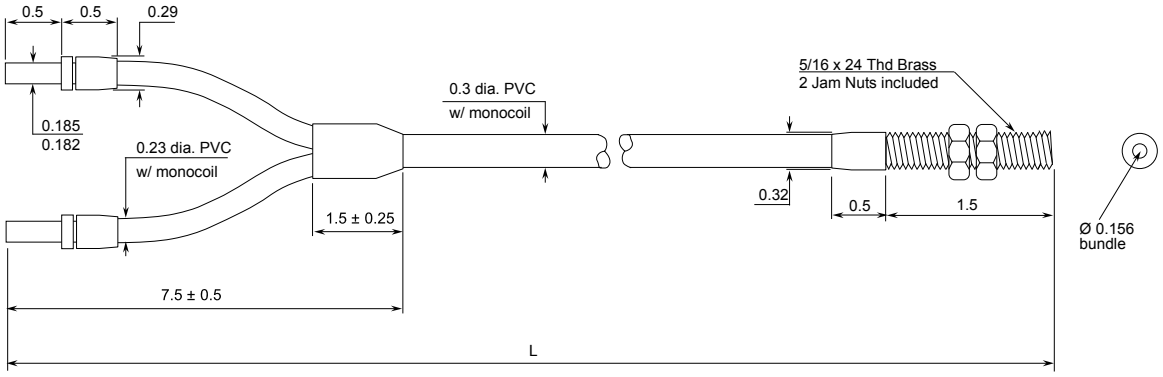


| Model | L (in) |
|---|---|
| **BT2.53P** | 36 |

# BTxxP Series Glass Fibers

*BT1xP and BT2xP Series Fibers*

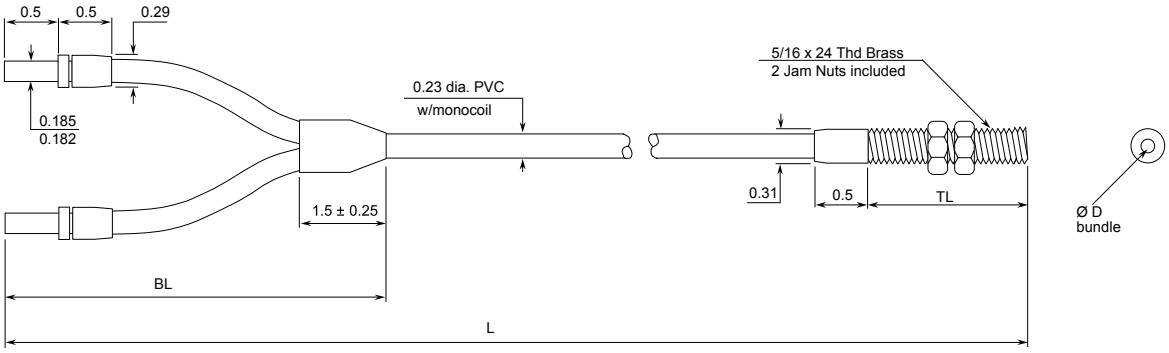


| Model | BL (in) | L (in) | TL (in) | D (in) |
|---|---|---|---|---|
| **BT13P** | 7.5 ± 1.5 | 36 | 1.5 | 0.062 |
| **BT23P** | 7.5 ± 1.5 | 36 | 1.5 | 0.125 |
| **BT26P** | 7.5 ± 1.5 | 72 | 1.5 | 0.125 |
| **BT210P** | 7.5 ± 1.5 | 120 | 1.5 | 0.125 |


© Banner Engineering Corp. All rights reserved.
www.bannerengineering.com

# BT1xxx Series Glass Fibers

*BT1.13.3ST5M6 Glass Fiber*

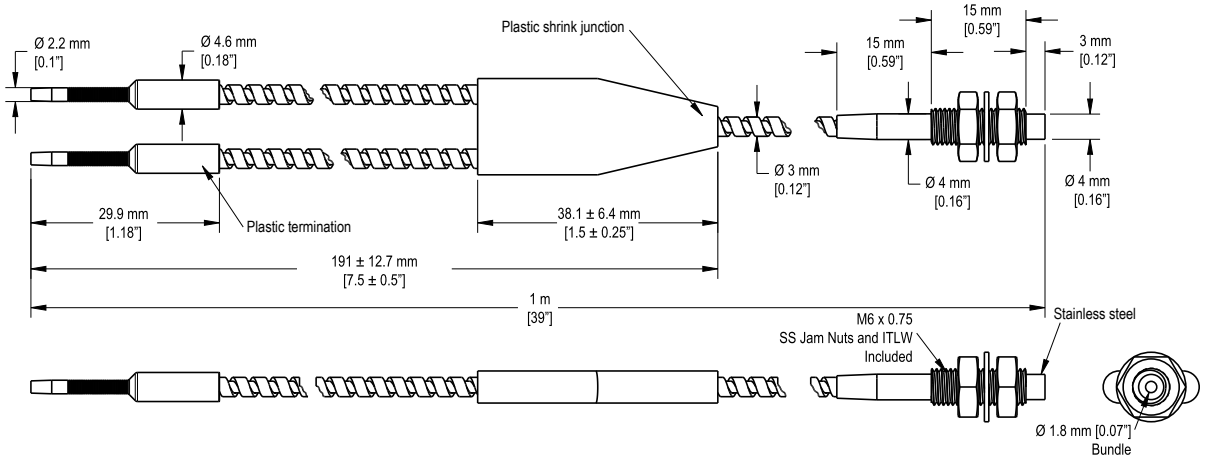


*BT1.56ST5M900 Diffuse Mode Glass Fiber*

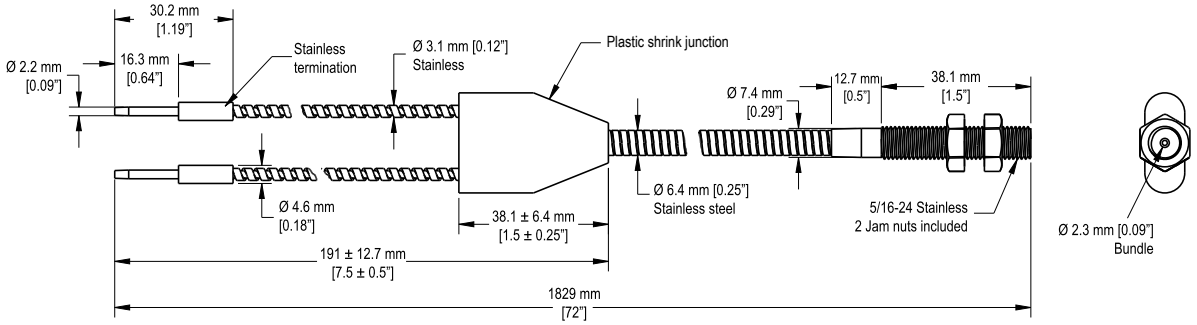


*BT1.8SMBL3.5 Fiber*

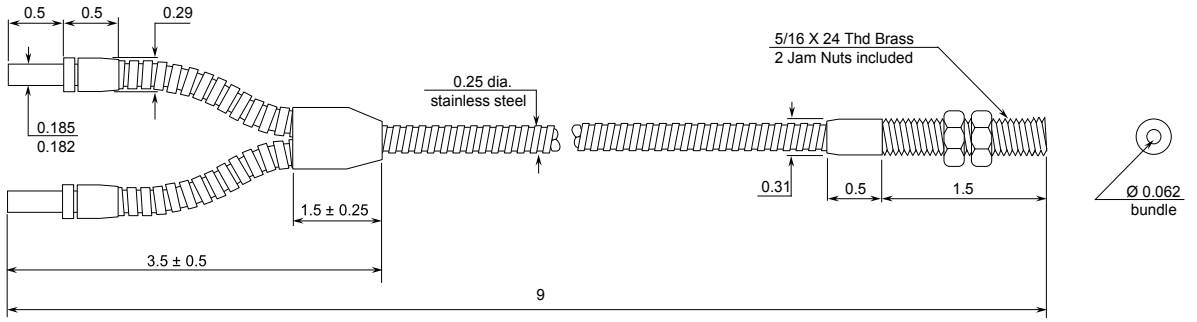


*BT13.5ST5 Fiber*

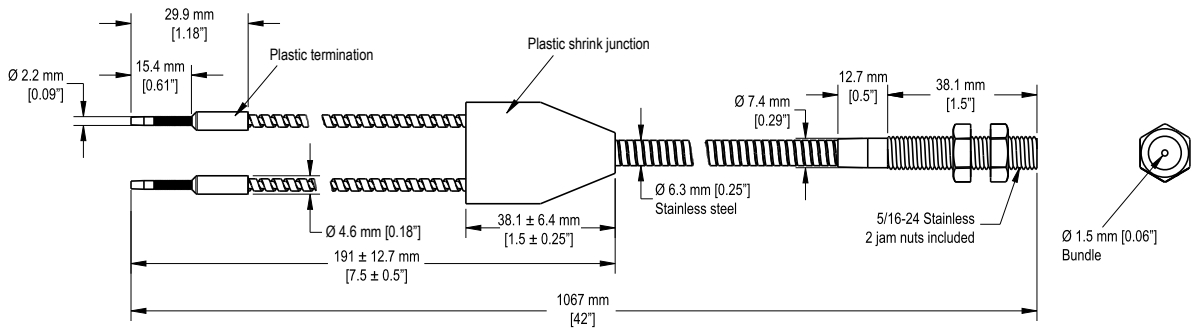


An M900 suffix at the end of a part number indicates a fiber bundle fused together on the threaded end (no epoxy used). The maximum operating temperature is 900 °F.


© Banner Engineering Corp. All rights reserved.
www.bannerengineering.com

# BTxxPMSS Fibers

*BTxxPMSS Fibers*

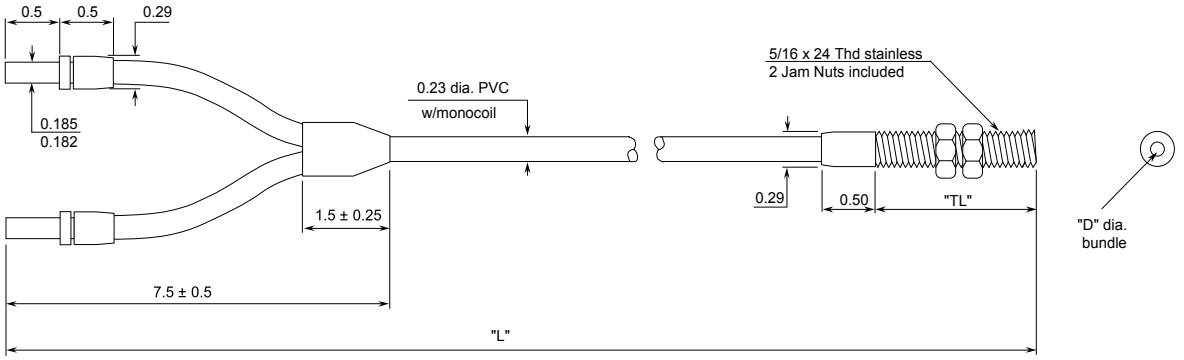


| Model | TL (in) | L (in) | D (in) |
|---|---|---|---|
| **BT13PMSS** | 1.5 | 36 | 0.062 |
| **BT23PMSS** | 1.5 | 36 | 0.125 |
| **BT210PMSS** | 1.5 | 120 | 0.125 |

# BT2xxSM6 and SM8 Fibers

*BT23SM6 Glass Fibers*

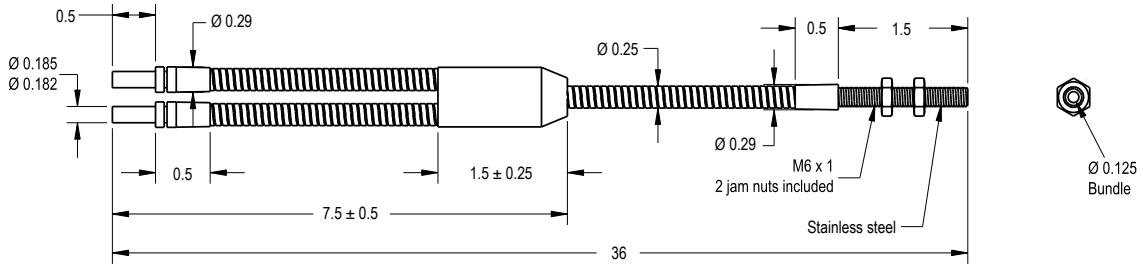


*BT2xxSM8 Fibers*

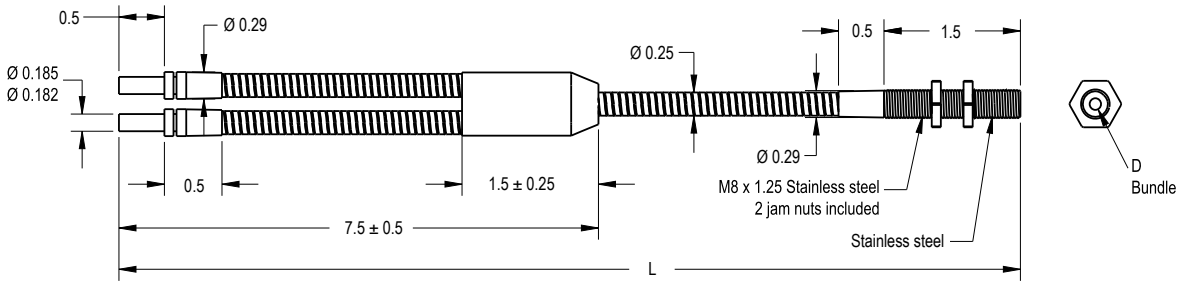


| Model | L (in) | D (in) |
|---|---|---|
| **BT13SM8** | 36 | 0.062 |
| **BT23SM8** | 36 | 0.125 |
| **BT26SM8** | 72 | 0.125 |
| **BT28SM8** | 96 | 0.125 |
| **BT210SM8M900** | 120 | 0.125 |
| **BT212SM8M900** | 144 | 0.125 |

An M900 suffix at the end of a part number indicates a fiber bundle fused together on the threaded end (no epoxy used). The maximum operating temperature is 900 °F.


© Banner Engineering Corp. All rights reserved.
www.bannerengineering.com

# BTxxSMSS Fibers

*BTxxSMSS Fibers*

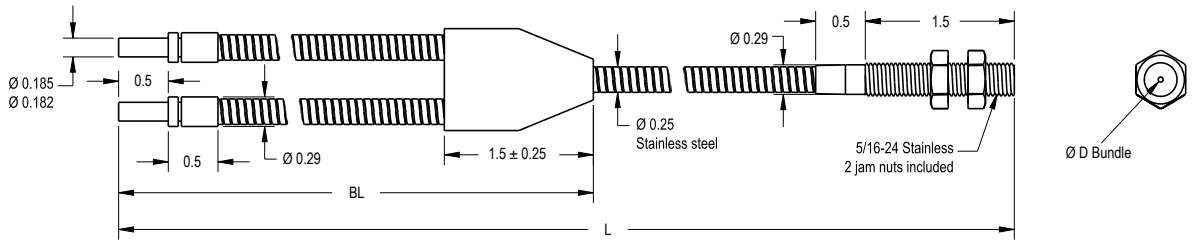


| Model | BL (in) | L (in) | D (in) |
|---|---|---|---|
| **BT23SMSS** | 7.5 ± 0.5 | 36 | 0.125 |
| **BT25SMSS** | 7.5 ± 0.5 | 60 | 0.125 |
| **BT26SMSS** | 7.5 ± 0.5 | 72 | 0.125 |
| **BT210SMSS** | 7.5 ± 0.5 | 120 | 0.125 |
| **BT215SMSS** | 7.5 ± 0.5 | 180 | 0.125 |
| **BT220SMSS** | 7.5 ± 0.5 | 240 | 0.125 |

# BT2xxSMVF Fibers

*BT2xxSMVF Fibers*

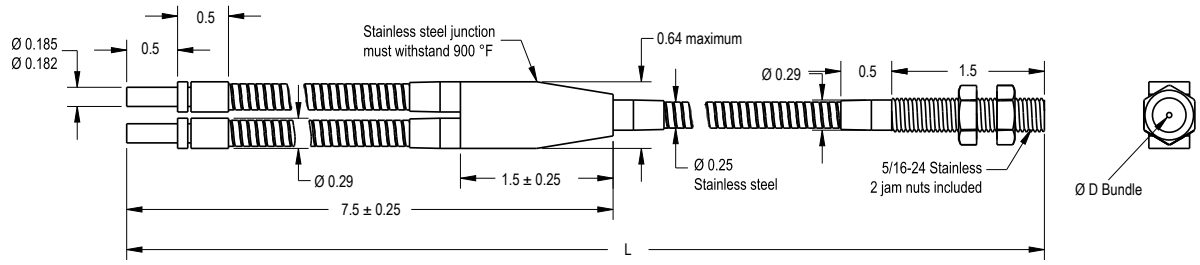


| Model | L (in) | D (in) |
|---|---|---|
| **BT25SMVF** | 60 | 0.125 |
| **BT28SMVF** | 96 | 0.125 |
| **BT210SMVF** | 120 | 0.125 |
| **BT213.2SMVF** | 158 | 0.125 |


© Banner Engineering Corp. All rights reserved.
www.bannerengineering.com

# BTxxLMNC Series Glass Fibers

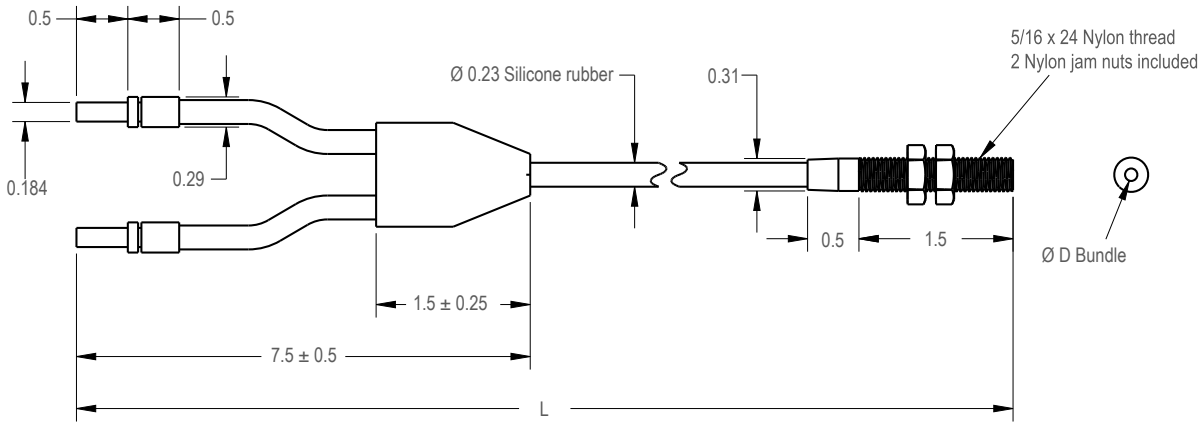


| Model | L (in) | D (in) |
|---|---|---|
| **BT23LMNC** | 36 | 0.125 |
| **BT26LMNC** | 72 | 0.125 |

# BT26SM600MHF Glass Fibers

*BT26SM600MHF Series*

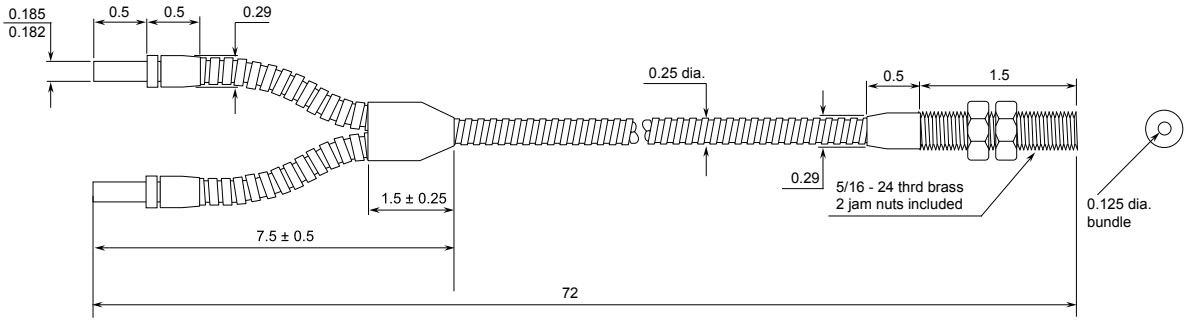


The **HF** in the model number indicates a high-flex fiber. The **M600** designates a threaded end potted in epoxy that will withstand up to 600 °F.

# BT6xST5-VL Series Glass Fibers

*BT6xST5-VL Series Glass Fibers*

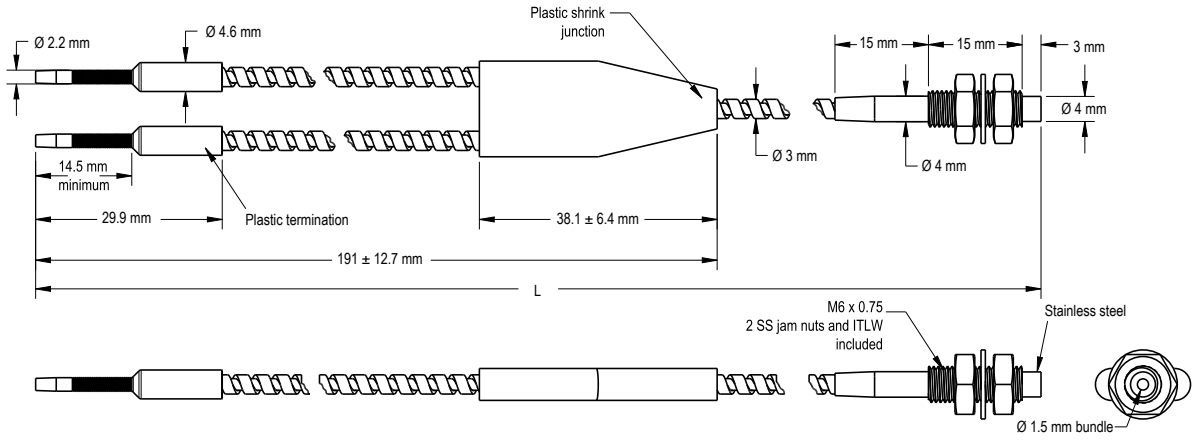



© Banner Engineering Corp. All rights reserved.
www.bannerengineering.com

| Model | CAD Files | L (mm) |
|---|---|---|
| **BT63ST5-VL** | CAD files: DXF, PDF, IGS, STP | 1000 |
| **BT66ST5-VL** | | 2000 |

**Operating Temperature**
-140 to 249 °C

**Minimum Bend Radius**
25 mm


© Banner Engineering Corp. All rights reserved.
www.bannerengineering.com