# Features

*Compact, single-point devices for error-proofing of bin-picking operations*



Fixed field and polarized retroreflective models



Capacitive touch models



Push button models

- Rugged, cost-effective, and easy-to-install solutions for error-proofing and parts-verification applications
- Illuminated dome provides easy-to-see job light status
- Choose either polarized retroreflective, fixed-field, touch, or push button models
- Fully encapsulated IP67 construction
- Modbus RTU communication minimizes the cabling requirements

| Models | Sensing Mode | Range | Colors | Connection |
|---|---|---|---|---|
| K50FF25GRYS1Q | Fixed field, infrared, 880 nm | 25 mm cutoff | Green, Red, Yellow | Integral 4-pin M12 male quick-disconnect connector |
| K50FF25GRYS1QP | | | | 150 mm (6 in) PVC-jacketed cable with a 4-pin M12 male quick-disconnect connector |
| K50FF50GRYS1Q | | 50 mm cutoff | | Integral 4-pin M12 male quick-disconnect connector |
| K50FF50GRYS1QP | | | | 150 mm (6 in) PVC-jacketed cable with a 4-pin M12 male quick-disconnect connector |
| K50FF100GRYS1Q | | 100 mm cutoff | | Integral 4-pin M12 male quick-disconnect connector |
| K50FF100GRYS1QP | | | | 150 mm (6 in) PVC-jacketed cable with a 4-pin M12 male quick-disconnect connector |
| K50LPGRYS1Q | Polarized Retroreflective, visible red, 680 nm | 2 m (6 ft) | | Integral 4-pin M12 male quick-disconnect connector |
| K50LPGRYS1QP | | | | 150 mm (6 in) PVC-jacketed cable with a 4-pin M12 male quick-disconnect connector |
| K50TGRYS1Q | Capacitive Touch | N/A | | Integral 4-pin M12 male quick-disconnect connector |
| K50TGRYS1QP | | | | 150 mm (6 in) PVC-jacketed cable with a 4-pin M12 male quick-disconnect connector |
| K50PBGRYS1Q | Push Button | | | Integral 4-pin M12 male quick-disconnect connector |
| K50PBGRYS1QP | | | | 150 mm (6 in) PVC-jacketed cable with a 4-pin M12 male quick-disconnect connector |

# Wiring

| 4-pin M12 Quick-Disconnect Connector (Male) | Pins | Wire Color | Sensor Connection |
|---|---|---|---|
| 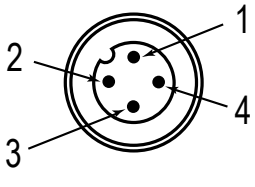  | 1 | Brown | Power IN (+), 12 V DC to 30 V DC |
| | 2 | White | RS-485 + |
| | 3 | Blue | Ground (-) |
| | 4 | Black | RS-485 (-) |

- For cables, use Turck's BL ident® cables or their equivalent. For example:
  - RK 4.5T-2-RS 4.5T/S2501 2 meter double-ended male/female
  - RK 4.5T-1-RS 4.5T/S2501 1 meter double-ended male/female
  - RK 4.5T-2/S2501 single-ended 2 meter female
- For tees, use Turck RSC 2RKC 57
- For terminators, use Banner model EZL-RTM-M or EZL-RTM-F

Original Instructions
10-Jun-25

© Banner Engineering Corp. All rights reserved.
www.bannerengineering.com

183981
p/n: 183981 Rev. F

ПРОМЭЛЕКТРОНИКА/ sales@prom-elec.com

# Typical Installation

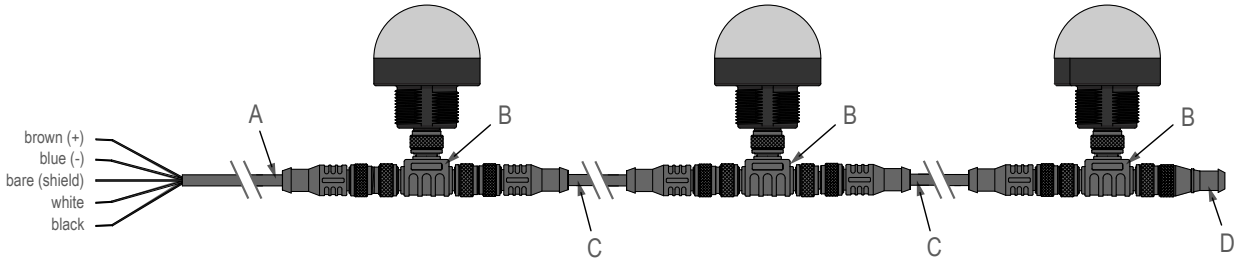


| | |
|---|---|
| A | Single-ended cable |
| B | Tee |
| C | Double-ended cable |
| D | Terminator. Contains a 120 Ohm termination resistor connected across pins 2 and 4. Use the terminator for long cables or long lines of cascaded units to prevent signal reflections from occurring on the communication lines. |

| 5-pin M12 Quick-Disconnect Connector (Male) | Pin | Wire Color |
|---|---|---|
| 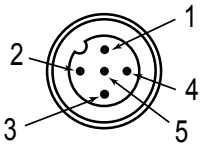 | 1 | Brown |
| | 2 | White |
| | 3 | Blue |
| | 4 | Black |
| | 5 | Bare (Shield). Connect the shield to ground at the power supply connection. |



# Modbus RTU Registers

The EZ-LIGHT uses the holding registers table for providing read/write access to configuration data. The holding registers are defined in the 40000-49999 address range.

The input registers table is used for providing read-only access to system status data. The input registers are defined in the 30000-39999 address range. **EZ-LIGHT employs a direct addressing scheme.** For example, the input register at address 30000 is accessed by reading address 30000 (0x7530) directly; the starting address is not an offset.

## Supported Modbus RTU Functions

| Functions | Output Status |
|---|---|
| 03 | Reading holding registers |
| 04 | Read input registers |
| 06 | Write single registers |
| 08 | See Diagnostics, Function 8 (0x08) for supported commands. |
| 16 (0x10) | Write multiple registers |
| 23 (0x17) | Read/write multiple registers |

## Holding Registers

| Address | Description | Holding Register Representation |
|---|---|---|
| 40001 | Modbus slave address | 1 (default) through 247 |
| 40002 | Baud | 0 = 9.6k<br>1 = 19.2k (default)<br>2 = 38.4k |
| 40003 | Parity | 0 = even (default)<br>1 = odd<br>2 = none |
| 40004 | Stop bits | 1 = 1 stop bit (default)<br>2 = 2 stop bits |

Continued on page 3


© Banner Engineering Corp. All rights reserved.
www.bannerengineering.com

Continued from page 2

| Address | Description | Holding Register Representation |
|---|---|---|
| 40005 | Configuration Select | 0 = No selectable configuration<br>1 = Function F2 configuration<br>2 = Function C3 configuration<br>3 = Function E5 configuration |
| 40006 | Modbus Settings Policy | 0 = Apply After Power Cycle (default)<br>1 = Apply After Write<br>Exception: Writing 'Configuration Select' takes effect immediately. The maximum time to program a new configuration is two seconds. |
| 40100 | Job 1 Input Register | 0 = Job Inactive (power on value)<br>1 = Job Active |
| 40101 * | Job 2 Input Register | 0 = Job Inactive (power on value)<br>1 = Job Active |
| 40102 * | Job 3 Input Register | 0 = Job Inactive (power on value)<br>1 = Job Active |

* Not in all configurations.

## Function F2 Configuration

Three job lights, independent output; lights are independent of output. Color 2 overrides color 1, and color 3 overrides colors 1 and 2.

| Job input 1 | Job input 2 | Job Input 3 | FF 'Hand/Pick' Configuration #182186 | LP 'Block' Configuration #183942 | Touch/Push Button Configuration #188525 | Sensor Output | Sensor Color |
|---|---|---|---|---|---|---|---|
| Not active | Not active | Not active | Not detected | Unblocked | No touch or push button inactive | Not active | Light off |
| Active | Not active | Not active | Not detected | Unblocked | | Not active | Job 1 light on |
| Active | Not active | Not active | Detected | Blocked | Touch or push button active | Active | Job 1 light on |
| Not active | Active | Not active | Not detected | Unblocked | No touch or push button inactive | Not active | Job 2 light on |
| Not active | Active | Not active | Detected | Blocked | Touch or push button active | Active | Job 2 light on |
| Not active | Not active | Active | Not detected | Unblocked | No touch or push button inactive | Not active | Job 3 light on |
| Not active | Not active | Active | Detected | Blocked | Touch or push button active | Active | Job 3 light on |
| Active | Active | Not active | Not detected | Unblocked | No touch or push button inactive | Not active | Job 2 light on |
| Active | Active | Not active | Detected | Blocked | Touch or push button active | Active | Job 2 light on |
| Active | Not active | Active | Not detected | Unblocked | No touch or push button inactive | Not active | Job 3 light on |
| Active | Not active | Active | Detected | Blocked | Touch or push button active | Active | Job 3 light on |
| Not active | Active | Active | Not detected | Unblocked | No touch or push button inactive | Not active | Job 3 light on |
| Not active | Active | Active | Detected | Blocked | Touch or push button active | Active | Job 3 light on |
| Active | Active | Active | Not detected | Unblocked | No touch or push button inactive | Not active | Job 3 light on |
| Active | Active | Active | Detected | Blocked | Touch or push button active | Active | Job 3 light on |

## Function C3

Three colors used for Job, Mis-pick, and Acknowledge lights. The Acknowledge light overrides the Job light and incorporates a 500 ms leading-edge output/indicator light OFF delay. Time-out is initiated at the onset of the signal. If the target is present for longer than 500 ms and then removed, the output/indicator immediately turns off. The output and indicator lights' (Mis-pick and Acknowledge) time-outs track together.

| Job input | FF 'Hand/Pick' Configuration #183940 | LP 'Block' Configuration #183943 | Touch/Push Button Configuration #188523 | Sensor Output | Sensor Color |
|---|---|---|---|---|---|
| Not active | Not detected | Unblocked | No touch or push button inactive | Not active | Light off |
| Not active | Detected | Blocked | Touch or push button active | Active | Red Mis-pick light on |
| Active | Not detected | Unblocked | No touch or push button inactive | Not active | Green Job light on |
| Active | Detected | Blocked | Touch or push button active | Active | Yellow Acknowledge light on |

## Function E5

Three colors: two Job lights and one Sense light. Both Job lights override the Sense light; and Job light 1 overrides Job light 2.


© Banner Engineering Corp. All rights reserved.
www.bannerengineering.com

| Job input 1 | Job input 2 | FF 'Hand/Pick' Configuration #184292 | LP 'Block' Configuration #184293 | Touch/Push Button Configuration #188524 | Sensor Output | Sensor Color |
|---|---|---|---|---|---|---|
| Not active | Not active | Not detected | Unblocked | No touch or push button inactive | Not active | Light off |
| Not active | Not active | Detected | Blocked | Touch or push button active | Active | Yellow Sense light on |
| Active | Not active | Not detected | Unblocked | No touch or push button inactive | Not active | Green Job 1 light on |
| Active | Not active | Detected | Blocked | Touch or push button active | Active | Green Job 1 light on |
| Not active | Active | Not detected | Unblocked | No touch or push button inactive | Active | Red Job 2 light on |
| Not active | Active | Detected | Blocked | Touch or push button active | Active | Red Job 2 light on |
| Active | Active | Not detected | Unblocked | No touch or push button inactive | Not active | Red Job 2 light on |
| Active | Active | Detected | Blocked | Touch or push button active | Active | Red Job 2 light on |

# Input Registers

| Address | Description | Input Register Representation |
|---|---|---|
| 30001 | Sensor output status | 0 = Not Sensed, 1 = Sensed |
| | | |
| The following information registers (31000–31022) must be read as a block; they cannot be read as single registers. | | |
| 31000 | Low word firmware part number | Example: 0x0002A734 (hex) = 173876 (dec)<br>High word = 0x0002, Low word = 0xA734 |
| 31001 | High word firmware part number | |
| 31002 | Firmware version | Bits 7–4 = Major Version<br>Bits 3–0 = Minor Version.<br><br>Example: 0x0012 is version 1.2 |
| 31003 | Build number | 0–0xFFFF (hex) = 0–65535 (dec) |
| 31004 | Low word model number | Example: 0x00016D43 (hex) = 93507 (dec)<br>High word = 0x0001, Low word = 0x6D43 |
| 31005 | High word model number | |
| 31006 | Model version | Bits 7–4 = Major Version<br>Bits 3–0 = Minor Version.<br><br>Example: 0x0012 is version 1.2 |
| 31007 | Low word configuration number | Example: 0x0002C7AA (hex) = 182186 (dec)<br>High word = 0x0002, Low word = 0xC7AA (hex) |
| 31008 | High word configuration number | |
| 31009 | Configuration version | Bits 7-4=Major Version, Bits 3-0=Minor Version. Example:0x0012 is version 1.2 |
| 31013–31013 | Date code, 8 bytes | |
| 31014 | Low Word Flash Config 1 Part Number | Example: 0x0002C7AA (hex) = 182186 (dec)<br>High word=0x0002, Low word: 0xC7AA<br><br>0xFFFFFFFF (hex) = No flash configuration |
| 31015 | High Word Flash Config 1 Part Number | |
| 31016 | Flash Config 1 Version | Bits 7–4 = Major Version<br>Bits 3–0 = Minor Version<br><br>0x00FF = No flash version |
| 31017 | Low Word Flash Config 2 Part Number | Example: 0x0002CE84 (hex) = 183940 (dec)<br>High word = 0x0002, Low word = 0xCE84<br><br>0xFFFFFFFF (hex) = No flash configuration |
| 31018 | High Word Flash Config 2 Part Number | |
| 31019 | Flash Config 2 Version | Bits 7–4 = Major Version<br>Bits 3–0 = Minor Version<br><br>0x00FF = No flash version |
| 31020 | Low Word Flash Config 3 Part Number | Example: 0x0002CFE4 (hex) = 184292 (dec)<br>High word = 0x0002, Low word = 0xCFE4<br><br>0xFFFFFFFF (hex) = No flash configuration |
| 31021 | High Word Flash Config 3 Part Number | |
| 31022 | Flash Config 3 Version | Bits 7–4 = Major Version<br>Bits 3–0 = Minor Version<br><br>0x00FF = No flash version |
| | | |
| 32000 | Bus Message Count | Returns same value as Diagnostic Function sub-function 11 (0x0B) |
| 32001 | Bus Communication Error Count | Returns same value as Diagnostic Function sub-function 12 (0x0C) |

Continued on page 5


© Banner Engineering Corp. All rights reserved.
www.bannerengineering.com

Continued from page 4

| Address | Description | Input Register Representation |
|---|---|---|
| 32002 | Bus Exception Error Count | Returns same value as Diagnostic Function sub-function 13 (0x0D) |
| 32003 | Server Message Count | Returns same value as Diagnostic Function sub-function 14 (0x0E) |
| 32004 | Server NAK Count | Returns same value as Diagnostic Function sub-function 16 (0x10) |
| 32005 | Bus Character Overrun Count | Returns same value as Diagnostic Function sub-function 18 (0x12) |
| 32006 | Buffer Overrun Count | Returns the number of times a buffer overrun has occurred. |

## Diagnostics, Funcion 8 (0x08)

| Subfunction | Description | |
|---|---|---|
| 0 | Return Query Data | |
| 1 | Restart Communications Option | Not supported |
| 2 | Return Diagnostic Register | Returns value of 0, any other value is an internal error condition |
| 10 (0x0A) | Clear Counters and Diagnostic Register | |
| 11 (0x0B) | Return Bus Message Count | |
| 12 (0x0C) | Return Bus Communication Error Count | |
| 13 (0x0D) | Return Bus Exception Error Count | |
| 14 (0x0E) | Return Server Message Count | |
| 15 (0x0F) | Return Server No Response Count | Not supported |
| 16 (0X10) | Return Server NAK Count | |
| 17 (0X11) | Return Server Busy Count | Not supported |
| 18 (0x12) | Return Bus Character Overrun Count | |
| 20 (0x14) | Clear Overrun Counter and Flag | |

# Example Commands and Responses

For these examples, the slave address is 1.

### Write Color 1 Active

| | | |
|---|---|---|
| Master | 01109CA4000102000122BD | |
| Response | 01109CA400016E7A | |

### Write Color 1 Inactive

| | | |
|---|---|---|
| Master | 01109CA40001020000E37D | |
| Response | 01109CA400016E7A | |

### Read Device Status Registers

| | | |
|---|---|---|
| Master | 0104753100023A08 | Command to read both output and sensor status registers |
| Possible Responses | 01040400000000FB84 | Output Inactive, button not pressed |
| | 01040400100016B84 | Output Active, button pressed |
| | 01040400010000AA44 | Output Active, button not pressed |

### Write Configuration Registers

| | | |
|---|---|---|
| Master | 01109C4100030600010001000100001BC3 | Write three registers: Slave address 1, 19200 baud, Even parity |
| Response | 01109C410003FE4C | |

### Read Configuration Registers

| | | |
|---|---|---|
| Master | 01039C4100037B8F | Command to read all three configuration registers |

Continued on page 6


© Banner Engineering Corp. All rights reserved.
www.bannerengineering.com

Continued from page 5

| | | |
|---|---|---|
| Response | 0103060001000100004D75 | Response with slave address 1, 19200 baud, even parity |

### Read Information Registers

| | | |
|---|---|---|
| Master | 010479180017295F | Command to read all info registers |
| Response | 01042EA7340002001000026D4300010010CFE4000200106AF319E27D1240E4C7AA00020010CE8400020010CFE400020010C652 | |

# Specifications

**Supply Voltage and Current**

12 DC to 30 V DC

Fixed field and polarized retroreflective models: 100 mA at 12 V DC; 110 mA at 30 V DC

Touch and push button models: 100 mA at 12 V DC; 65 mA at 30 V DC

**Supply Protection Circuitry**

Protected against reverse polarity and transient voltages

**Environmental Rating**

IP67

**Operating Conditions**

–40 °C to +50 °C (–40 °F to +122 °F)

90% at +50 °C maximum relative humidity (non-condensing)

Storage: –40 °C to +70 °C (–40 °F to +158 °F)

**Communication**

Interface: RS-485 Serial

Baud Rates: 9.6k, 19.2k (default), or 38.4k

Data format: 8 data bits, no parity (default), 1 stop bit (even or odd parity available)

Protocol: Modbus RTU

**Construction**

Housing: polycarbonate

Translucent dome: polycarbonate

Mounting Nut: PBT

**Connections**

Integral 4-pin M12 male quick-disconnect connector; or 150 mm (6 in) PVC-jacketed cable with a 4-pin M12 male quick-disconnect connector

**Vibration and Mechanical Shock**

All models meet MIL-STD-202F, Method 201A (Vibration: 10 Hz to 60 Hz maximum, 0.06 inch (1.52 mm) double amplitude, 10G maximum acceleration) requirements. Also meets IEC 60947-5-2 (Shock: 30G 11 ms duration, half sine wave) requirements.

**Light Intensity**

| Color | Wavelength (nm) | Typical Intensity (Lumen) | | |
|---|---|---|---|---|
| | | K50FF/LP | K50PB | K50T |
| Green | 525 | 17 | 38 | 39 |
| Red | 625 | 6 | 13 | 16 |
| Yellow | 590 | 4 | 10 | 13 |

**Certifications**

Banner Engineering BV
Park Lane, Culliganlaan 2F bus 3
1831 Diegem, BELGIUM

# Dimensions

All measurements are listed in millimeters [inches], unless noted otherwise. The measurements provided are subject to change.

**Fixed Field, Polarized Retroreflective, and Push Button Models**

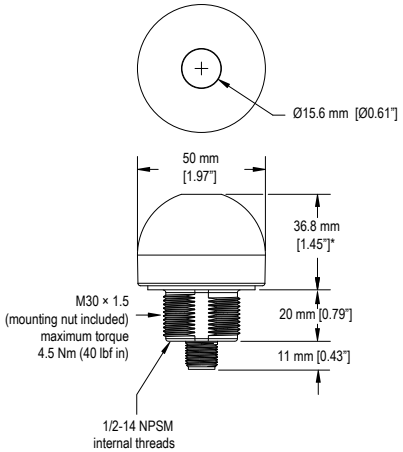


* For push-button models, this dimension is 44.2 mm (1.74 in).

**Capacitance Touch Button Models**

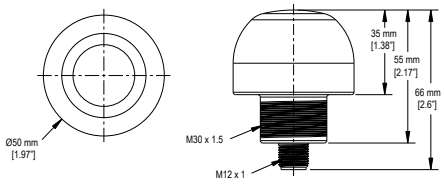



© Banner Engineering Corp. All rights reserved.
www.bannerengineering.com

# Banner Engineering Corp Limited Warranty

Banner Engineering Corp. warrants its products to be free from defects in material and workmanship for one year following the date of shipment. Banner Engineering Corp. will repair or replace, free of charge, any product of its manufacture which, at the time it is returned to the factory, is found to have been defective during the warranty period. This warranty does not cover damage or liability for misuse, abuse, or the improper application or installation of the Banner product.

**THIS LIMITED WARRANTY IS EXCLUSIVE AND IN LIEU OF ALL OTHER WARRANTIES WHETHER EXPRESS OR IMPLIED (INCLUDING, WITHOUT LIMITATION, ANY WARRANTY OF MERCHANTABILITY OR FITNESS FOR A PARTICULAR PURPOSE), AND WHETHER ARISING UNDER COURSE OF PERFORMANCE, COURSE OF DEALING OR TRADE USAGE.**

This Warranty is exclusive and limited to repair or, at the discretion of Banner Engineering Corp., replacement. **IN NO EVENT SHALL BANNER ENGINEERING CORP. BE LIABLE TO BUYER OR ANY OTHER PERSON OR ENTITY FOR ANY EXTRA COSTS, EXPENSES, LOSSES, LOSS OF PROFITS, OR ANY INCIDENTAL, CONSEQUENTIAL OR SPECIAL DAMAGES RESULTING FROM ANY PRODUCT DEFECT OR FROM THE USE OR INABILITY TO USE THE PRODUCT, WHETHER ARISING IN CONTRACT OR WARRANTY, STATUTE, TORT, STRICT LIABILITY, NEGLIGENCE, OR OTHERWISE.**

Banner Engineering Corp. reserves the right to change, modify or improve the design of the product without assuming any obligations or liabilities relating to any product previously manufactured by Banner Engineering Corp. Any misuse, abuse, or improper application or installation of this product or use of the product for personal protection applications when the product is identified as not intended for such purposes will void the product warranty. Any modifications to this product without prior express approval by Banner Engineering Corp will void the product warranties. All specifications published in this document are subject to change; Banner reserves the right to modify product specifications or update documentation at any time. Specifications and product information in English supersede that which is provided in any other language. For the most recent version of any documentation, refer to: www.bannerengineering.com.

For patent information, see www.bannerengineering.com/patents.


© Banner Engineering Corp. All rights reserved.