# EZ-BEAM® S2 Series Sensors

## Datasheet

*Designed for use on Sensor BUS Networks*

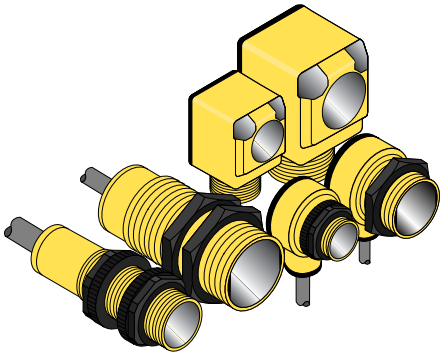

- Low cost and easy to use; no adjustments are necessary
- Sensor selection is simply a matter of choosing a housing style and sensing mode
- Models available for opposed (through-beam), polarized retroreflective, and fixed-field diffuse modes
- Advanced self-diagnostics with separate alarm output; dual LED system indicates sensor performance
- Solid-state outputs for direct connection to a BUS system network junction such as a Banner BUS DEPOT®
- 4-pin quick disconnect connector for standard Euro-style extension cables
- Epoxy-encapsulated circuitry; leakproof IEC IP67 (NEMA 6P) rating for harsh sensing environments
- Brackets available for several mounting options

**WARNING:**

- **Do not use this device for personnel protection**
- Using this device for personnel protection could result in serious injury or death.
- This device does not include the self-checking redundant circuitry necessary to allow its use in personnel safety applications. A device failure or malfunction can cause either an energized (on) or de-energized (off) output condition.

## Overview

S2 Series EZ-BEAM sensors are designed to connect directly to a smart BUS system network junction, such as the Banner BUS-DEPOT®. S2 Series sensors are internally wired to take advantage of the EZ-BEAM's marginal signal ALARM output. The ALARM output is normally open (N.O.) and conducts whenever the sensor's excess gain drops to between 1X and 1.5X in the light condition. The sensing signal output is also normally open, which means that the output conducts when light is sensed (in essence - light operate).

In order to take advantage of the second ALARM output, S2 sensors require the use of BUS DEPOT junctions which offer two channels per input. Both sensor outputs are PNP (current sourcing) for direct connection to a BUS network junction using standard 4-pin euro-style extension cables.

S2 Series sensors offer all of the features and powerful sensing performance that EZ-BEAMs offer. The innovative dual-indicator system takes the guesswork out of sensor performance monitoring. Housings are tightly sealed and the sensor circuitry is epoxy-encapsulated for reliable duty in wet or oily sensing environments. Models are available for opposed (through-beam), polarized retroreflective and fixed-field diffuse sensing (see Product Families on p. 1).

There are three basic housing styles. The S-style is a threaded barrel which is available in 18 mm or 30 mm diameters. The Q-style offers either 25 mm or 40 mm right-angle rectangular housings. Finally, the T-style is a patented[1] right-angle design available with either an 18 mm or 30 mm threaded lens. The T-style combines the mounting ease of a barrel sensor with the low-profile advantage of a right-angle design.

Several mounting options are available, including angled brackets and split-clamp brackets. S2 series sensors may also be mounted through suitable clearance holes. See Brackets on p. 7 for more information.

## Product Families

| Family | Sensor Package | Available Sensing Modes and Ranges | | |
|---|---|---|---|---|
| | | Opposed | Retroreflective | Fixed-Field |
| **S18** | 18 mm barrel | 20 m (60 ft) | 2 m (79 in) | 50 mm (2 in)<br>100 mm (4 in) |
| **S30** | 30 mm barrel | 60 m (200 ft) | 6 m (20 ft) | 200 mm (8 in)<br>400 mm (16 in) |

[1] U.S. Patent #5087838

Original Document
45416 Rev. A

22 July 2020

45416

ПРОМЭЛЕКТРОНИКА/ sales@prom-elec.com

| Family | Sensor Package | Available Sensing Modes and Ranges | | |
|---|---|---|---|---|
| | | Opposed | Retroreflective | Fixed-Field |
| Q25 | 25 mm rectangular | 20 m (60 ft) | 2 m (79 in) | 50 mm (2 in)<br>100 mm (4 in) |
| Q40 | 40 mm rectangular | 60 m (200 ft) | 6 m (20 ft) | 200 mm (8 in)<br>400 mm (16 in) |
| T18 | 18 mm right-angle | 20 m (60 ft) | 2 m (79 in) | 50 mm (2 in)<br>100 mm (4 in) |
| T30 | 30 mm right-angle | 60 m (200 ft) | 6 m (20 ft) | 200 mm (8 in)<br>400 mm (16 in) |

## Models

| Opposed Mode Emitter (E) and Receiver (R) | | | | |
|---|---|---|---|---|
| Models | Range | Cable | Supply Voltage | Output Type |
| S186EQ | 20 m (66 ft) | Integral 4-pin M12/Euro-style male quick disconnect | 10 V DC to 30 V DC | PNP |
| S18S2P6RQ | | | | |
| Q256EQ | | | | |
| Q25S2P6RQ | | | | |
| T186EQ | | | | |
| T18S2P6RQ | | | | |
| S306EQ | 60 m (200 ft) | | | |
| S30S2P6RQ | | | | |
| Q406EQ | | | | |
| Q40S2P6RQ | | | | |
| T306EQ | | | | |
| T30S2P6RQ | | | | |

| Retroreflective Mode | | | | |
|---|---|---|---|---|
| Models | Range | Cable | Supply Voltage | Output Type |
| S18S2P6LPQ | 2 m (79 in) | Integral 4-pin M12/Euro-style male quick disconnect | 10 V DC to 30 V DC | PNP |
| Q25S2P6LPQ | | | | |
| T18S2P6LPQ | | | | |
| S30S2P6LPQ | 6 m (20 ft) | | | |
| Q40S2P6LPQ | | | | |
| T30S2P6LPQ | | | | |

| Fixed-Field Mode | | | | |
|---|---|---|---|---|
| Models | Range | Cable | Supply Voltage | Output Type |
| S18S2P6FF50Q | 50 mm (2 in) | Integral 4-pin M12/Euro-style male quick disconnect | 10 V DC to 30 V DC | PNP |
| Q25S2P6FF50Q | | | | |
| T18S2P6FF50Q | | | | |
| S18S2P6FF100Q | 100 mm (4 in) | | | |
| Q25S2P6FF100Q | | | | |
| T18S2P6FF100Q | | | | |
| S30S2P6FF200Q | 200 mm (8 in) | | | |
| Q40S2P6FF200Q | | | | |
| T30S2P6FF200Q | | | | |

| Fixed-Field Mode | | | | |
|---|---|---|---|---|
| **Models** | **Range** | **Cable** | **Supply Voltage** | **Output Type** |
| S30S2P6FF400Q | 400 mm (16 in) | | | |
| Q40S2P6FF400Q | | | | |
| T30S2P6FF400Q | | | | |

## Wiring

| Quick Disconnect Pin Detail | | | |
|---|---|---|---|
| **Pinout (Male)** | **Pin** | **Color** | **Description** |
| 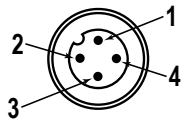 | 1 | Brown | 10 V DC to 30 V DC |
| | 2 | White | Alarm |
| | 3 | Blue | DC common |
| | 4 | Black | Sensing output |

| Emitter Quick Disconnect Pin Detail | | | |
|---|---|---|---|
| **Pinout (Male)** | **Pin** | **Color** | **Description** |
| 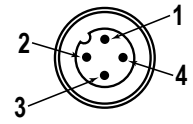 | 1 | Brown | 10 V DC to 30 V DC |
| | 2 | White | Not used |
| | 3 | Blue | DC common |
| | 4 | Black | Not used |

# Specifications

**Supply Voltage and Current**
10 V DC to 30 V DC (10% maximum ripple
Supply current (exclusive of current load):
**Opposed Mode Emitter:** 25 mA
**Opposed Mode Receiver:** 20 mA
**Polarized Retroreflective:** 30 mA
**Fixed-field:** 35 mA

**Supply Protection Circuitry**
Protected against reverse polarity and transient voltages

**Output Configuration**
**Sensing Output:** PNP, light operating
**Alarm:** PNP, normally open and conducts whenever the sensor's excess gain drops to between 1X and 1.5X in the light condition

**Output Rating**
150 mA maximum (each); the total load may not exceed 150 mA
**Off-state leakage current:** < 1 µA at 30 V DC
**On-state saturation voltage:** < 1 at 10 mA DC; < 1.5 at 150 mA DC

**Output Protection Circuitry**
Protected against output short-circuit, continuous overload, and false pulse on power-up

**Output Response Time**
**Opposed:** 3 milliseconds on and 1.5 milliseconds off
**Polarized Retroreflective and Fixed-Field:** 3 milliseconds on and off

**Note:** 100 millisecond delay on power-up; outputs are non-conducting during this time

**Certifications**

**Repeatability**
**Opposed:** 375 microseconds
**Polarized Retroreflective and Fixed-Field:** 750 microseconds
Repeatability and response are independent of signal strength

**Indicators**
Two LEDs: green and yellow
**Green, glowing steadily** = power to sensor is on
**Green, flashing** = output is overloaded
**Yellow, glowing steadily** = normally open output is conducting
**Yellow, flashing** = excess gain marginal (1-1.5x) in light condition

**Construction**
Housings are thermoplastic PBT polyester
Lenses are polycarbonate (opposed models) or acrylic (retro and fixed-field models) S18 and S30 come with two jam nuts
T18, T30, Q25 and Q40 come with one jam nut

**Environmental Rating**
Leakproof design rated NEMA 6P, IEC IP67

**Connections**
Integral 4-pin M12/Euro-style male quick disconnect
Cables are ordered separately

**Operating Temperature**
–40 °C to +70 °C (–40 °F to +158 °F)
90% at +50 °C maximum relative humidity (non-condensing)

**Vibration and Mechanical Shock**
All models meet MIL-STD-202F, Method 201A (Vibration: 10 Hz to 60 Hz maximum, 0.06 inch (1.52 mm) double amplitude, 10G acceleration) requirements. Method 213B conditions H&I. Shock: 75G with device operating; 100G for non-operation

# Performance Curves

## Opposed Mode

### Beam Pattern

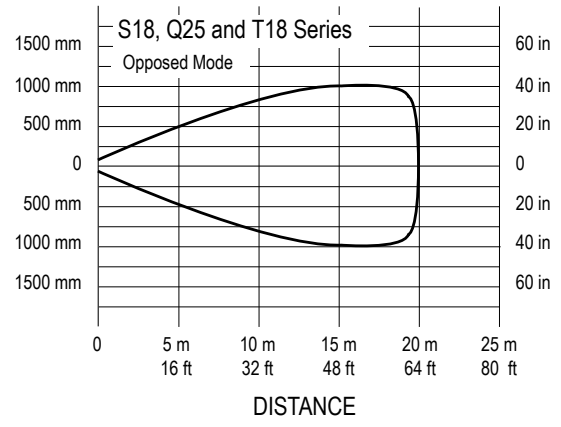


### Excess Gain

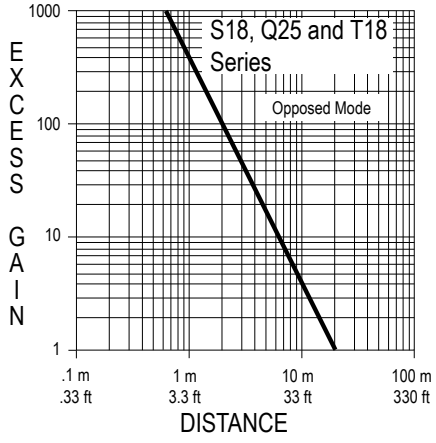


**Effective Beam: 13 mm (0.5 in)**

## Opposed Mode

### Beam Pattern

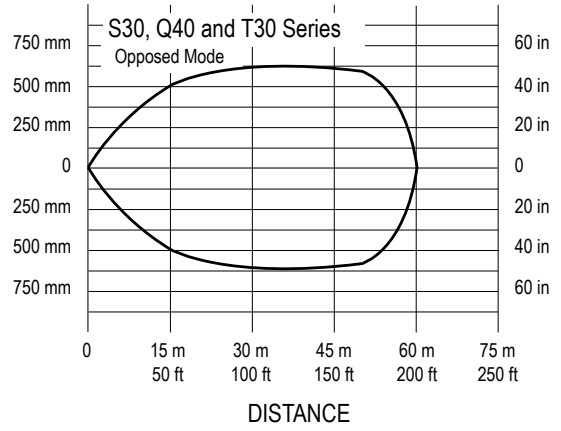


### Excess Gain

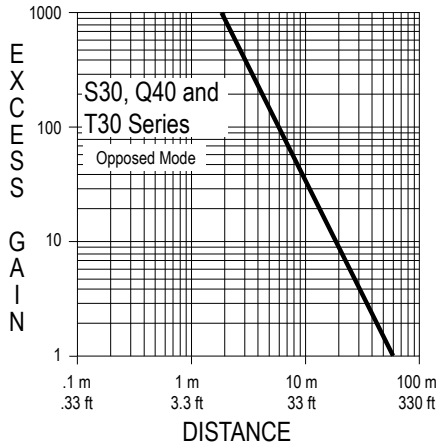


**Effective Beam: 23 mm (0.9 in)**

## Retroreflective Mode

### Beam Pattern

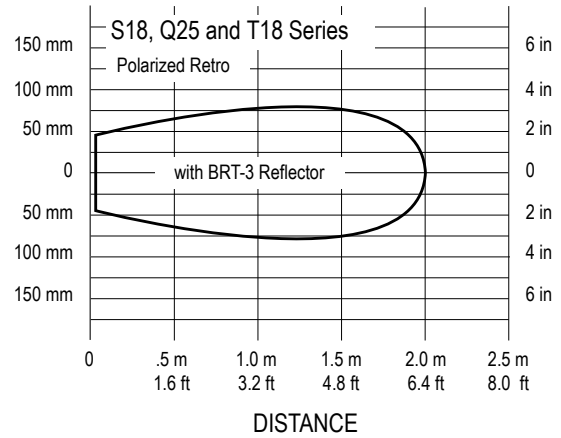


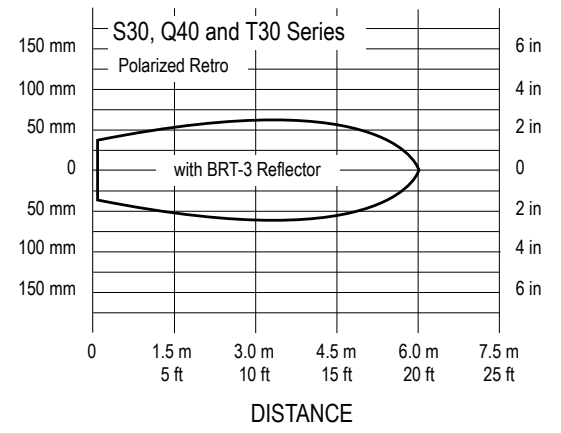


### Excess Gain

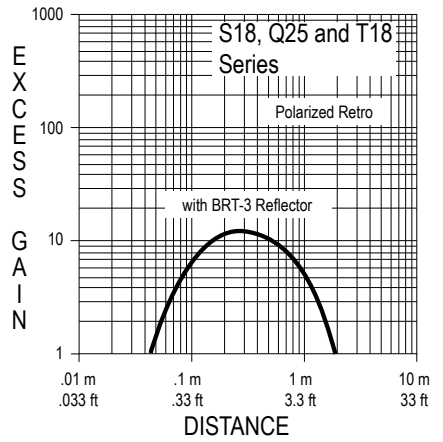


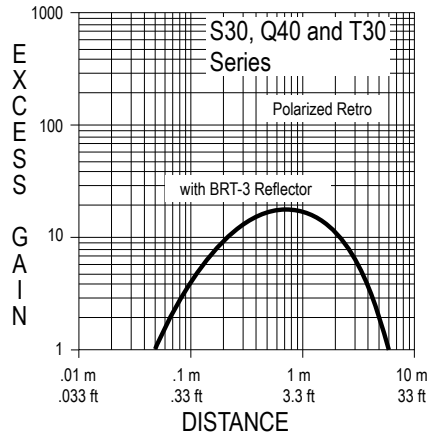

**Fixed-Field Mode - Performance Based on 90% Reflectance White Test Card**

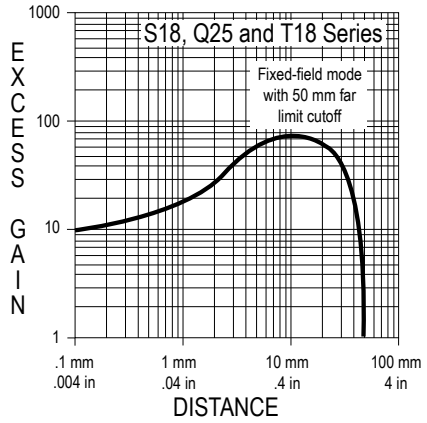


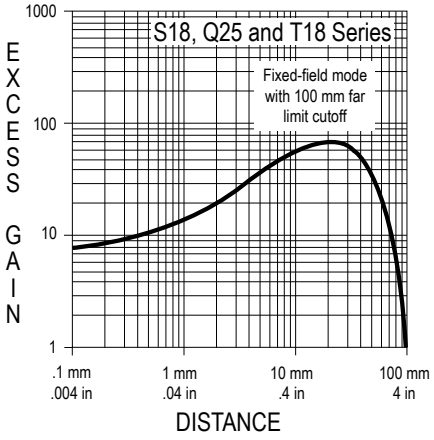


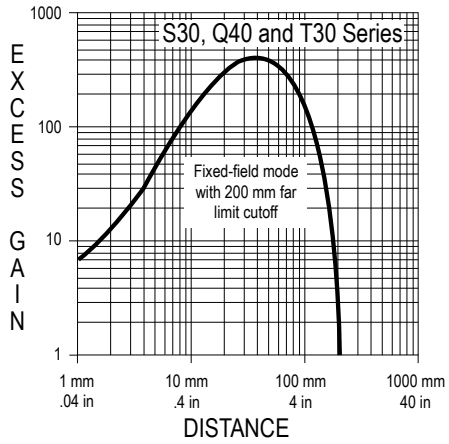


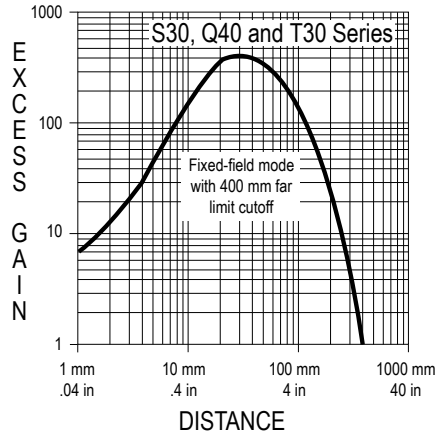


## Dimensions

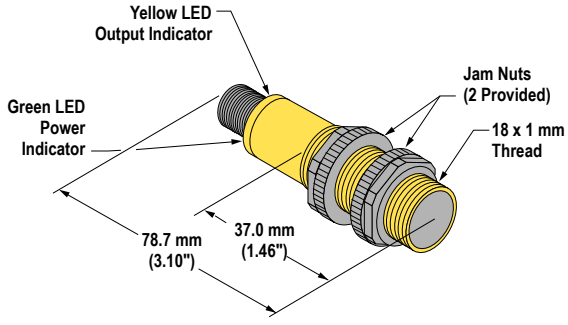


**S18**

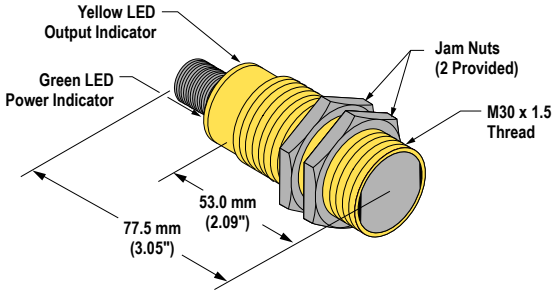


**S30**

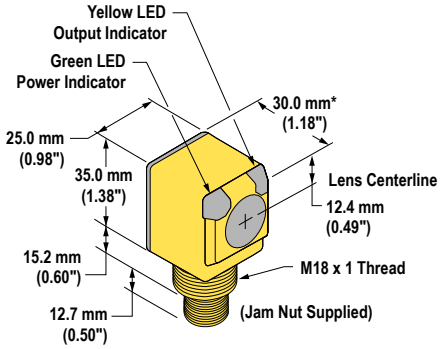


Q25

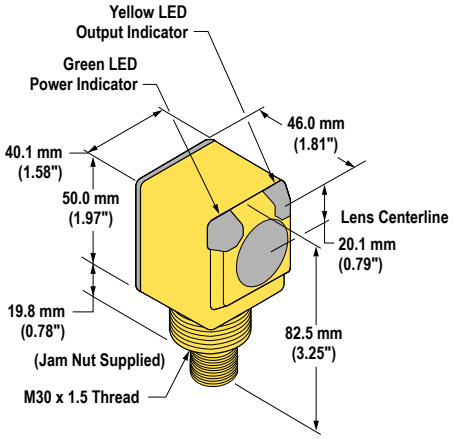


Q40

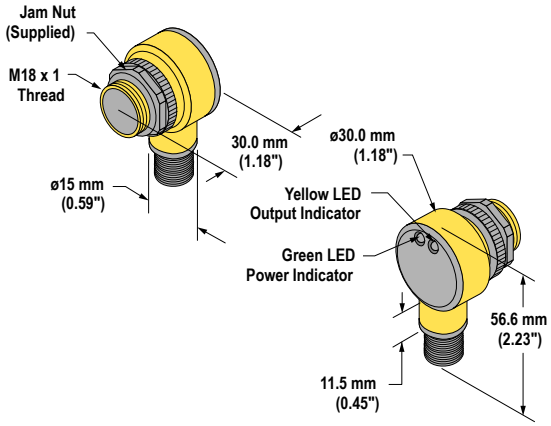


T18

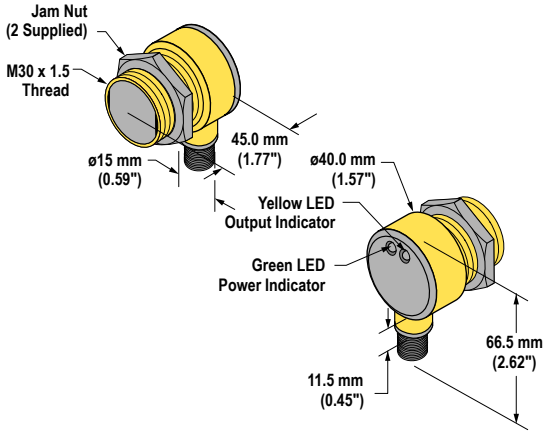


T30

# Accessories

## Brackets

**SMB18A**

- Right-angle mounting bracket with a curved slot for versatile orientation
- 12-ga. stainless steel
- 18 mm sensor mounting hole
- Clearance for M4 (#8) hardware

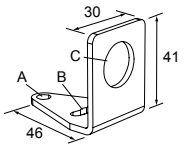


**Hole center spacing:** A to B = 24.2
**Hole size:** A = ø 4.6, B = 17.0 × 4.6, C = ø 18.5

**SMB30A**

- Right-angle bracket with curved slot for versatile orientation
- Clearance for M6 (¼ in) hardware
- Mounting hole for 30 mm sensor
- 12-ga. stainless steel

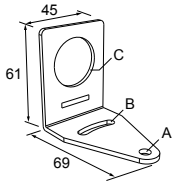


**Hole center spacing:** A to B=40
**Hole size:** A=ø 6.3, B= 27.1 x 6.3, C=ø 30.5

**SMB18Q**

- Right-angle flanged bracket
- 18 mm sensor mounting hole
- 12-ga. stainless steel

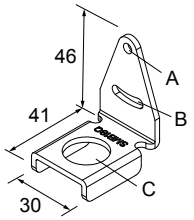


**Hole center spacing:** A to B = 24.2
**Hole size:** A = ø 4.6, B = 17.0 × 4.6, C = ø 19.0

**SMB30Q**

- Right-angle flanged mounting bracket with curved slot for versatile orientation
- 12-ga. stainless steel
- Mounting hole for 30 mm sensor

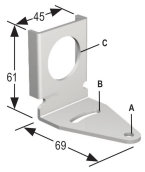


**Hole center spacing:** A to B=40
**Hole size:** A=ø 6.3, B=ø 27.1 x 6.3, C=ø 30.7

**SMB18C**

- 18 mm split clamp, black thermoplastic polyester
- Stainless steel mounting hardware included

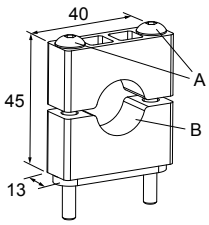


A = ø 3 mm (2)
**Hole size:** B = ø 18 mm

**SMB30C**

- 30 mm split clamp, black PBT bracket
- Stainless steel mounting hardware included
- Mounting hole for 30 mm sensor

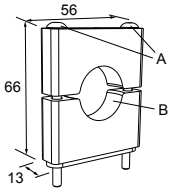


**Hole center spacing:** A=ø 45
**Hole size:** B=ø 27.2

**SMB18S**

- 18 mm swivel bracket
- Black thermoplastic polyester
- Stainless steel mounting hardware included (Two M5 x 0.8 x 60 mm screws)

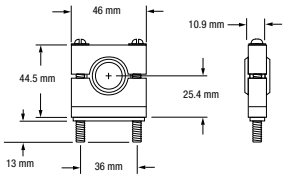


**SMB30S**

- Swivel bracket with 30 mm mounting hole for sensor
- Adjustable captive swivel ball
- Black reinforced thermoplastic polyester
- Stainless steel mounting and swivel locking hardware included

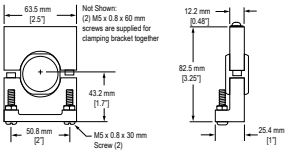


## Banner Engineering Corp Limited Warranty

Banner Engineering Corp. warrants its products to be free from defects in material and workmanship for one year following the date of shipment. Banner Engineering Corp. will repair or replace, free of charge, any product of its manufacture which, at the time it is returned to the factory, is found to have been defective during the warranty period. This warranty does not cover damage or liability for misuse, abuse, or the improper application or installation of the Banner product.

**THIS LIMITED WARRANTY IS EXCLUSIVE AND IN LIEU OF ALL OTHER WARRANTIES WHETHER EXPRESS OR IMPLIED (INCLUDING, WITHOUT LIMITATION, ANY WARRANTY OF MERCHANTABILITY OR FITNESS FOR A PARTICULAR PURPOSE), AND WHETHER ARISING UNDER COURSE OF PERFORMANCE, COURSE OF DEALING OR TRADE USAGE.**

This Warranty is exclusive and limited to repair or, at the discretion of Banner Engineering Corp., replacement. **IN NO EVENT SHALL BANNER ENGINEERING CORP. BE LIABLE TO BUYER OR ANY OTHER PERSON OR ENTITY FOR ANY EXTRA COSTS, EXPENSES, LOSSES, LOSS OF PROFITS, OR ANY INCIDENTAL, CONSEQUENTIAL OR SPECIAL DAMAGES RESULTING FROM ANY PRODUCT DEFECT OR FROM THE USE OR INABILITY TO USE THE PRODUCT, WHETHER ARISING IN CONTRACT OR WARRANTY, STATUTE, TORT, STRICT LIABILITY, NEGLIGENCE, OR OTHERWISE.**

Banner Engineering Corp. reserves the right to change, modify or improve the design of the product without assuming any obligations or liabilities relating to any product previously manufactured by Banner Engineering Corp. Any misuse, abuse, or improper application or installation of this product or use of the product for personal protection applications when the product is identified as not intended for such purposes will void the product warranty. Any modifications to this product without prior express approval by Banner Engineering Corp will void the product warranties. All specifications published in this document are subject to change; Banner reserves the right to modify product specifications or update documentation at any time. Specifications and product information in English supersede that which is provided in any other language. For the most recent version of any documentation, refer to: www.bannerengineering.com.

For patent information, see www.bannerengineering.com/patents.



© Banner Engineering Corp. All rights reserved