Create an S4B Muting Solution

This document assists with creating a bill of materials for an S4B muting system. Refer to the S4B brochure or bundle builder for selecting the light curtain pair and accessories.

Follow these steps to create a turn-key muting solution for your S4B Safety Light Curtain.

Note that EZ-SCREEN S4B Mute Arm Sensor Kits do not require additional mounting brackets and can be mounted directly to a flat surface.

L configuration

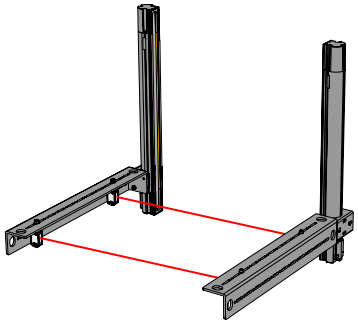

T configuration

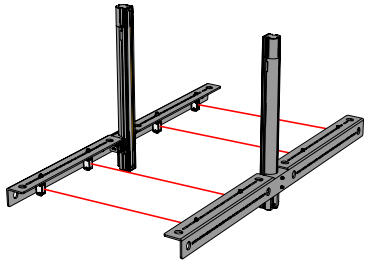

X configuration

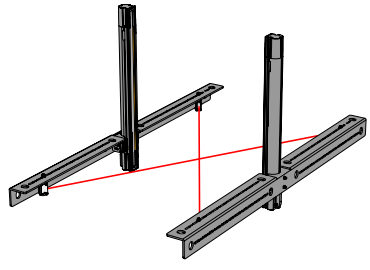

1. Select and order one of the following LPQ20 Mute Arm Sensor Kits.
   - L Configuration: **S4BA-ML-LPQ20** (can be used as a right or left mute arm kit)
   - T Configuration: **S4BA-MT-LPQ20**
   - X Configuration: **S4BA-MX-LPQ20**

   Sensor Kits include one sensor arm, Q20-2 sensors (two for L and X, four for T), one reflector arm with reflectors installed on the arm (two for L and X, four for T), and mounting hardware.
2. Order the appropriate extension cable(s). Order 5-pin cables to connect the S4B or mute sensors to an R95 Molded Junction Box (**R95-6M125-M128-S4BM**). Order 8-pin cables to connect the R95 to the safety controller. See "Accessories for the Mute Arm Sensor Kit" on page 2.
   - To connect the **LPQ20** Mute Arm Sensor Kits to the R95 Molded Junction Box, order cordset (A) model **BC-M12F5-M12M5-22-X** where X is length in meters. Two cordsets are required for the L and X configurations, and four cordsets are required for the T configuration.
   - Order the cordset to connect the Safety Controller to the R95 Molded Junction Box (B), cordset model **BC-M12F8-24-X** where X is length in meters.
   - (Optional cordset) **BC-M12F8-M12F8-24-X** where X is the length in meters. This cordset can be used as an extension cordset extending the **BC-M12F8-24-X** cordset to the **R95-6M125-M128-S4BM** if needed.
   - The cordset (C) to connect the S4B Emitter and Receiver to the R95 Junction Block is model **BC-M12F5-M12M5-22-X** where X is the length in meters.
3. Optional step: Order a mute light and cable.
   - Select a mute light from "EZ-LIGHT® Mute Lights" on page 4. These must be wired directly to the Safety Controller or PLC.
   - Select a mute light cable (D) to connect the mute light to the safety controller or PLC, for example model **BC-M12F5-22-X** where X is the length in meters.
4. Order a Banner SC/XS Safety Controller. See "Safety Controllers" on page 4.

Original Instructions
19-Aug-25

© Banner Engineering Corp. All rights reserved.
www.bannerengineering.com

250980
p/n: 250980 Rev. A

ПРОМЭЛЕКТРОНИКА/ sales@prom-elec.com

Muting system diagram

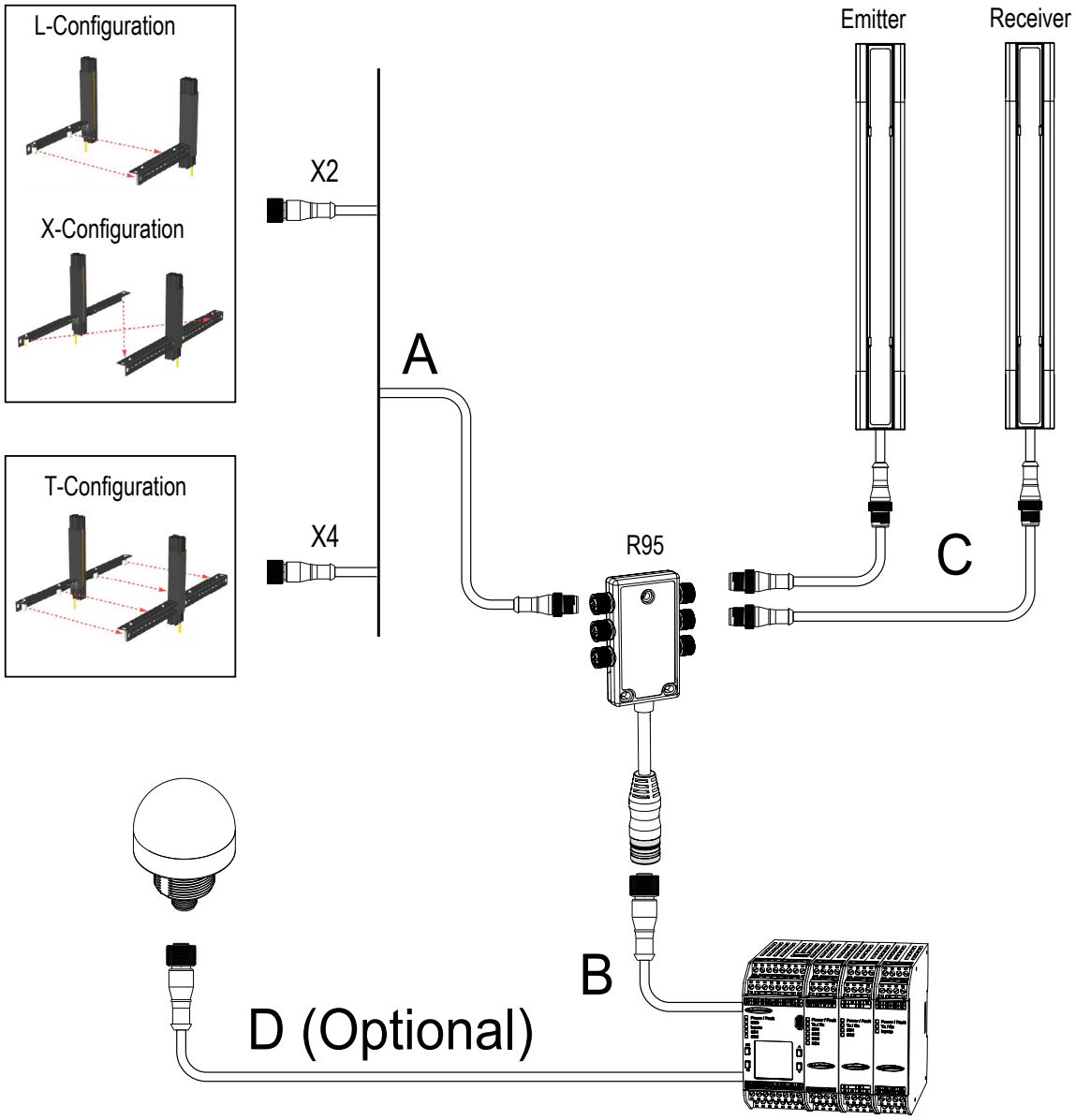

Accessories

Accessories for the Mute Arm Sensor Kit

Model	Description
R95-6M125-M128-S4BM	Muting connection box
S4BA-Q20-2VPLP-Q5	Q20-2 retroreflective mute sensor with 600 mm cable and M12 quick disconnect connector
BRT-2x2	Retroreflective target (reflector) for use with mute sensor

© Banner Engineering Corp. All rights reserved.
www.bannerengineering.com

5-pin Single-Ended M12 Female Cordsets				
Model	**Length**	**Dimensions (mm)**	**Pinout (Female)**	
BC-M12F5-22-1	1 m (3.28 ft)	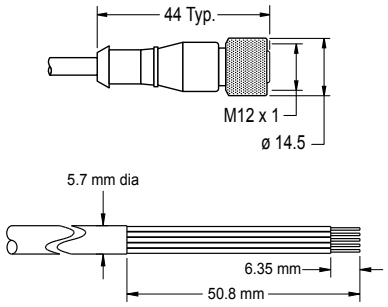	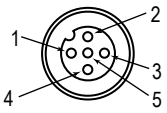	1 = Brown 2 = White 3 = Blue 4 = Black 5 = Gray
BC-M12F5-22-2	2 m (6.56 ft)			
BC-M12F5-22-5	5 m (16.4 ft)			
BC-M12F5-22-8	8 m (26.25 ft)			
BC-M12F5-22-10	10 m (30.81 ft)			
BC-M12F5-22-15	15 m (49.2 ft)			

5-pin A-Code Double-Ended M12 Female to M12 Male Cordsets				
Model	**Length**	**Dimensions (mm)**	**Pinouts**	
BC-M12F5-M12M5-22-1	1 m (3.28 ft)	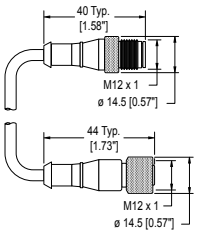	Female 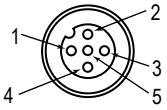 Male 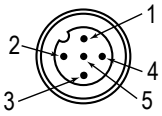	1 = Brown 2 = White 3 = Blue 4 = Black 5 = Gray
BC-M12F5-M12M5-22-2	2 m (6.56 ft)			
BC-M12F5-M12M5-22-5	5 m (16.4 ft)			
BC-M12F5-M12M5-22-8	8 m (26.25 ft)			
BC-M12F5-M12M5-22-10	10 m (30.81 ft)			
BC-M12F5-M12M5-22-15	15 m (49.2 ft)			

8-pin Single-Ended M12 Female Cordsets				
Model	**Length**	**Dimensions (mm)**	**Pinout (Female)**	
BC-M12F8-24-1	1 m (3.28 ft)	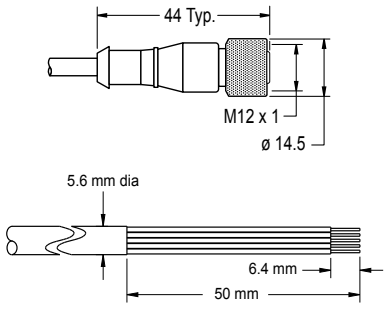	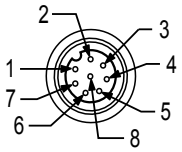	1 = White 2 = Brown 3 = Green 4 = Yellow 5 = Gray 6 = Pink 7 = Blue 8 = Red
BC-M12F8-24-2	2 m (6.56 ft)			
BC-M12F8-24-5	5 m (16.4 ft)			
BC-M12F8-24-8	8 m (26.25 ft)			
BC-M12F8-24-10	10 m (30.81 ft)			
BC-M12F8-24-15	15 m (49.2 ft)			

8-pin Double-Ended M12 Female to M12 Male Cordsets				
Model	**Length**	**Dimensions (mm)**	**Pinouts (Female)**	**Pinouts (Male)**
BC-M12F8-M12M8-24-1	1 m (3.28 ft)	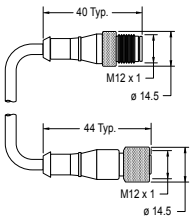	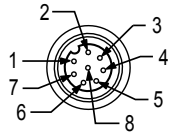	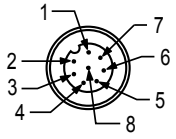
BC-M12F8-M12M8-24-2	2 m (6.56 ft)			
BC-M12F8-M12M8-24-5	5 m (16.4 ft)			
BC-M12F8-M12M8-24-8	8 m (26.25 ft)		1 = White 2 = Brown 3 = Green 4 = Yellow	5 = Gray 6 = Pink 7 = Blue 8 = Red
BC-M12F8-M12M8-24-10	10 m (30.81 ft)			
BC-M12F8-M12M8-24-15	15 m (49.2 ft)			

© Banner Engineering Corp. All rights reserved.
www.bannerengineering.com

EZ-LIGHT® Mute Lights

Models		Construction	Connection/ Recommended Cordset	LED Function
	**TL50WQ** **TL50YQ**	• Bases and Covers: ABS • Light Seg.: Polycarbonate • 30 mm base mount • IP67 • Indicates Mute Status	DEE2R-5XXXD (where XXX is the length in feet)	White Yellow
	**K50LWXXPQ** **K50LYXXPQ**	• Polycarbonate housing, 50 mm thermoplastic dome, 30 mm base mount • Fully encapsulated, IP67 • Indicates Mute Status		White Yellow

See "Accessories for the Mute Arm Sensor Kit" on page 2 for cordset information.

Safety Controllers

Safety Controllers provide a fully configurable, software-based safety logic solution for monitoring safety and non-safety devices.

For additional models and XS26 expansion modules, see instruction manual p/n 174868.

Safety controller models

Non-Expandable Models	Expandable Models	Description
SC26-2	**XS26-2**	26 convertible I/O and 2 redundant solid-state safety outputs
SC26-2d	**XS26-2d**	26 convertible I/O and 2 redundant solid-state safety outputs with display
SC26-2e	**XS26-2e**	26 convertible I/O and 2 redundant solid-state safety outputs with Ethernet
SC26-2de	**XS26-2de**	26 convertible I/O and 2 redundant solid-state safety outputs with display and Ethernet
SC10-2roe		10 inputs, 2 redundant relay safety outputs (3 contacts each) (ISD and Ethernet compatible)
	XS26-ISDd	26 inputs, 2 redundant solid-state safety outputs with display, Ethernet, and 8 ISD channels

Banner Engineering Corp Limited Warranty

Banner Engineering Corp. warrants its products to be free from defects in material and workmanship for one year following the date of shipment. Banner Engineering Corp. will repair or replace, free of charge, any product of its manufacture which, at the time it is returned to the factory, is found to have been defective during the warranty period. This warranty does not cover damage or liability for misuse, abuse, or the improper application or installation of the Banner product.

THIS LIMITED WARRANTY IS EXCLUSIVE AND IN LIEU OF ALL OTHER WARRANTIES WHETHER EXPRESS OR IMPLIED (INCLUDING, WITHOUT LIMITATION, ANY WARRANTY OF MERCHANTABILITY OR FITNESS FOR A PARTICULAR PURPOSE), AND WHETHER ARISING UNDER COURSE OF PERFORMANCE, COURSE OF DEALING OR TRADE USAGE.

This Warranty is exclusive and limited to repair or, at the discretion of Banner Engineering Corp., replacement. **IN NO EVENT SHALL BANNER ENGINEERING CORP. BE LIABLE TO BUYER OR ANY OTHER PERSON OR ENTITY FOR ANY EXTRA COSTS, EXPENSES, LOSSES, LOSS OF PROFITS, OR ANY INCIDENTAL, CONSEQUENTIAL OR SPECIAL DAMAGES RESULTING FROM ANY PRODUCT DEFECT OR FROM THE USE OR INABILITY TO USE THE PRODUCT, WHETHER ARISING IN CONTRACT OR WARRANTY, STATUTE, TORT, STRICT LIABILITY, NEGLIGENCE, OR OTHERWISE.**

Banner Engineering Corp. reserves the right to change, modify or improve the design of the product without assuming any obligations or liabilities relating to any product previously manufactured by Banner Engineering Corp. Any misuse, abuse, or improper application or installation of this product or use of the product for personal protection applications when the product is identified as not intended for such purposes will void the product warranty. Any modifications to this product without prior express approval by Banner Engineering Corp will void the product warranties. All specifications published in this document are subject to change; Banner reserves the right to modify product specifications or update documentation at any time. Specifications and product information in English supersede that which is provided in any other language. For the most recent version of any documentation, refer to: www.bannerengineering.com.

For patent information, see www.bannerengineering.com/patents.

© Banner Engineering Corp. All rights reserved.
www.bannerengineering.com