TABLE 1				
P/N	MODEL NO.	"L1"	"L2"	"L3"
81588	MQDC-402	600[23.62]	57.7[2.27]	6.9[0.27]
10729	MQDC-403	1000[39.37]	57.7[2.27]	6.9[0.27]
45136	MQDC-406	2000[78.74]	57.7[2.27]	6.9[0.27]
93962	MQDC-410	3010[118.50]	57.7[2.27]	6.9[0.27]
26850	MQDC-415	5000[196.85]	57.7[2.27]	6.9[0.27]
27142	MQDC-430	9000[354.33]	57.7[2.27]	6.9[0.27]
33649	MQDC-450	15000[590.55]	57.7[2.27]	6.9[0.27]
86054	MQDC-460	18300[720.47]	57.7[2.27]	6.9[0.27]
30958	MQDC-470	21000[826.77]	57.7[2.27]	6.9[0.27]
76770	MQDC-475	22900[901.57]	57.7[2.27]	6.9[0.27]
55428	MQDC-4100	30000[1181.10]	57.7[2.27]	6.9[0.27]
85547	MQDC-4150	45700[1799.21]	57.7[2.27]	6.9[0.27]
18045	MQDC-4170	52000[2047.24]	57.7[2.27]	6.9[0.27]
97147	MQDC-4200	61000[2401.57]	57.7[2.27]	6.9[0.27]
94932	MQDC-402.1	640[25.20]	127[5.00]	6.9[0.27]

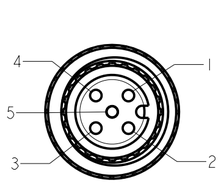

FEMALE POLES

1. BROWN
2. WHITE
3. BLUE
4. BLACK
5. UNUSED

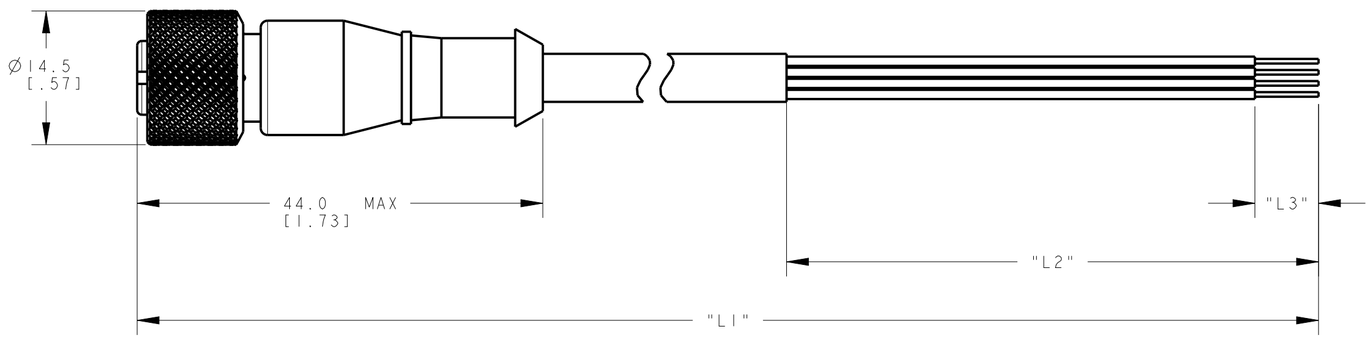

NOTES:
1. ALL DIMENSIONS ARE MILLIMETERS [INCHES] UNLESS OTHERWISE NOTED.
2. REFER TO "www.bannerengineering.com" FOR ADDITIONAL DATA AND SPECIFICATIONS.

This drawing is the property of BANNER ENGINEERING CORP. Any use or reproduction, in any form, without prior written permission of Banner is prohibited.
© 2015 Banner Engineering Corp.

THIRD ANGLE PROJECTION

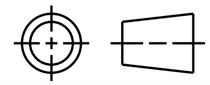

BANNER ENGINEERING CORP.
www.bannerengineering.com

TITLE
MQDC-4XX

SIZE	DRAWING NO.	REV.
C	218958	A

SCALE 2:1 | SHEET 1 OF 1

CREO

ПРОМЭЛЕКТРОНИКА/ sales@prom-elec.com