Sure Cross® DX81 FlexPower Supply Module

Datasheet



The DX81 Battery Supply Module delivers and manages dc voltage from one 3.6 V dc lithium primary battery.

- Wireless solution for powering a FlexPower® Node and sensor device
- Unique power management system to run the FlexPower Node and a device through switched power outputs for up to 5 years, depending upon the power requirements of the device
- Replaceable 3.6 V dc Lithium “D” cell battery
- IP67 sealed enclosure

FlexPower systems allow for a true wireless solution because the Node can be powered by battery power (3.6 to 5.5 V dc). Battery life is application specific. Contact Banner Engineering’s application engineers for a battery life calculation for your specific application.

For additional information, updated documentation, and accessories, refer to Banner Engineering's website, *www.bannerengineering.com/surecross*.

Model	Power	Battery	Cable
DX81	3.6 V dc battery	One 3.6 V Lithium "D" Cell	150 mm (6 in) pigtail cable with a 5-pin M12/Euro-style female quick disconnect (QD)

Refer to the Class I Division 2/Zone 2 control drawings (p/n *143086*) for wiring specifications or limitations.

WARNING: Not To Be Used for Personnel Protection

Never use this device as a sensing device for personnel protection. Doing so could lead to serious injury or death. This device does not include the self-checking redundant circuitry necessary to allow its use in personnel safety applications. A sensor failure or malfunction can cause either an energized or de-energized sensor output condition.

5-pin M12/Euro-style Wiring

Use the battery supply module to power *Flex*Power® devices only.

5-pin M12/Euro-style Female Connector	Pin	Wire Color	Description	DX80...C Terminals
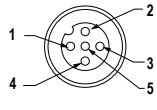	3	Blue	dc common (GND)	V-
	5	Gray [1]	3.6 V dc	B+

Replacing the Battery

When the FlexPower Supply Module is installed outdoors or in a high humidity environment, apply dielectric grease to the battery terminals to prevent moisture and corrosion buildup.

To replace the lithium "D" cell battery in the FlexPower Supply Module, follow these steps.

1. Unplug the battery module from the SureCross device it powers.
2. Remove the four screws mounting the battery module face plate to the body and remove the face plate.
3. Remove the discharged battery by pressing the battery towards the negative terminal to compress the spring. Pry up on the battery’s positive end to remove from the battery holder.

[1] Do not apply more than 5.5 V dc to the gray wire.

Original Document
131596 Rev. F

15 May 2016

131596

ПРОМЭЛЕКТРОНИКА/ sales@prom-elec.com

4. Replace with a new battery. Only use a 3.6 V lithium battery from Xeno, model number XL-205F.
5. Verify the battery's positive and negative terminals align to the positive and negative terminals of the battery holder mounted within the case. Caution: There is a risk of explosion if the battery is replaced incorrectly.
6. After replacing the battery, allow up to 60 seconds for the device to power up.
7. Properly dispose of your used battery according to local regulations by taking it to a hazardous waste collection site, an e-waste disposal center, or any other facility qualified to accept lithium batteries.

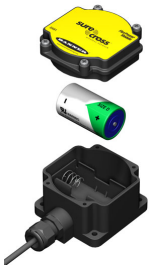

As with all batteries, these are a fire, explosion, and severe burn hazard. Do not burn or expose them to high temperatures. Do not recharge, crush, disassemble, or expose the contents to water.

The battery may be replaced in explosive gas atmospheres.

Replacement battery model number: BWA-BATT-001. For pricing and availability, contact Banner Engineering.

WARNING:

- Potential electrostatic charging hazard — only clean with a damp cloth.
- The replacement battery MUST be a Banner approved battery, model number BWA-BATT-001. Use of a different battery will VOID the intrinsic safety rating of this device and may result in an explosion!
- When replacing the battery, the negative end of the battery holder is the side with the spring terminal. This side is marked with a minus (–) sign.
- Do not attempt to recharge the battery. These batteries are not rechargeable. Recharging may cause serious injury to personnel or damage the equipment. Replace only with factory recommended batteries.

Specifications

Estimated Battery Life
19,000 mA·hours

Housing
Polycarbonate housing and rotary dial cover; polyester labels; EDPM rubber cover gasket; nitrile rubber, non-sulphur cured button covers
Weight: 0.26 kg (0.57 lbs)
Mounting: #10 or M5 (SS M5 hardware included)
Max. Tightening Torque: 0.56 N·m (5 lbf·in)

Wiring Access
One 1/2-inch NPT with 5-pin Euro-style 150 mm pigtail QD

Operating Conditions[2]
–40 °C to +85 °C (–40 °F to +185 °F)
95% maximum relative humidity (non-condensing)
Radiated Immunity: 10 V/m (EN 61000-4-3)

Environmental Rating
IEC IP67; NEMA 6

Shock and Vibration
IEC 68-2-6 and IEC 68-2-27
Shock: 30g, 11 millisecond half sine wave, 18 shocks
Vibration: 0.5 mm p-p, 10 to 60 Hz

Certifications

CSA: Class I Division 2 Groups ABCD, Class I Zone 2 AEx/Ex nA II T4 — Certificate: 1921239

ATEX: II 3 G Ex nA IIC T4 Gc (Group IIC Zone 2) — Certificate LCIE 10 ATEX 1012 X

Refer to the Class I Division 2/Zone 2 control drawings (p/n *143086*) for wiring specifications or limitations. All battery-powered devices must only use the lithium battery manufactured by Xeno, model XL-205F.

[2] Operating the devices at the maximum operating conditions for extended periods can shorten the life of the device.

Dimensions

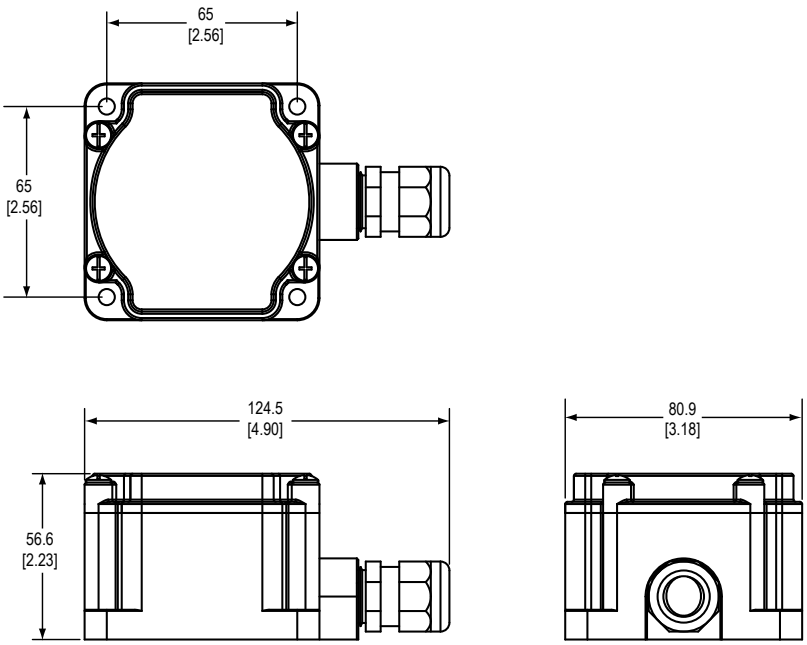

Copyright Notice

Any misuse, abuse, or improper application or installation of this product or use of the product for personal protection applications when the product is identified as not intended for such purposes will void the product warranty. Any modifications to this product without prior express approval by Banner Engineering Corp will void the product warranties. All specifications published in this document are subject to change; Banner reserves the right to modify product specifications or update documentation at any time. For the most recent version of any documentation, refer to: *www.bannerengineering.com*. © Banner Engineering Corp. All rights reserved.

Banner Engineering Corp. Limited Warranty

Banner Engineering Corp. warrants its products to be free from defects in material and workmanship for one year following the date of shipment. Banner Engineering Corp. will repair or replace, free of charge, any product of its manufacture which, at the time it is returned to the factory, is found to have been defective during the warranty period. This warranty does not cover damage or liability for misuse, abuse, or the improper application or installation of the Banner product.

THIS LIMITED WARRANTY IS EXCLUSIVE AND IN LIEU OF ALL OTHER WARRANTIES WHETHER EXPRESS OR IMPLIED (INCLUDING, WITHOUT LIMITATION, ANY WARRANTY OF MERCHANTABILITY OR FITNESS FOR A PARTICULAR PURPOSE), AND WHETHER ARISING UNDER COURSE OF PERFORMANCE, COURSE OF DEALING OR TRADE USAGE.

This Warranty is exclusive and limited to repair or, at the discretion of Banner Engineering Corp., replacement. IN NO EVENT SHALL BANNER ENGINEERING CORP. BE LIABLE TO BUYER OR ANY OTHER PERSON OR ENTITY FOR ANY EXTRA COSTS, EXPENSES, LOSSES, LOSS OF PROFITS, OR ANY INCIDENTAL, CONSEQUENTIAL OR SPECIAL DAMAGES RESULTING FROM ANY PRODUCT DEFECT OR FROM THE USE OR INABILITY TO USE THE PRODUCT, WHETHER ARISING IN CONTRACT OR WARRANTY, STATUTE, TORT, STRICT LIABILITY, NEGLIGENCE, OR OTHERWISE.

Banner Engineering Corp. reserves the right to change, modify or improve the design of the product without assuming any obligations or liabilities relating to any product previously manufactured by Banner Engineering Corp.