Features

No revision without agency approval.

To view or download the latest technical information about this product, including specifications, dimensions, accessories, and wiring, go to www.bannerengineering.com.

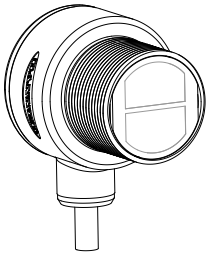

- Designed for use with approved amplifiers and intrinsically safe barriers in explosive environments
- NAMUR compliant sensor featuring EZ-BEAM® technology; the specially designed optics and electronics provide reliable sensing without the need for adjustments
- "T" style plastic housing with 30 mm threaded lens
- Completely epoxy-encapsulated to provide superior durability, even in harsh sensing environments; Banner tested to IP69K
- Innovative dual-indicator system takes the guesswork out of sensor performance monitoring
- Advanced diagnostics to warn of marginal sensing conditions or output overload
- 5 to 30 V DC; constant current output; ≤ 1.2 mA in the "dark" condition and ≥ 2.1 mA in the "light" condition

WARNING:

- **Do not use this device for personnel protection**
- Using this device for personnel protection could result in serious injury or death.
- This device does not include the self-checking redundant circuitry necessary to allow its use in personnel safety applications. A device failure or malfunction can cause either an energized (on) or de-energized (off) output condition.

Models

Model	Connection	Far-Limit Cutoff	LED	Output Type
T30AD9FF150	2 m (6.5 ft) unterminated 3-wire PVC-jacketed cable	150 mm (5.9 in)	Infrared, 880 nm	Constant current ≤ 1.2 mA dark ≥ 2.1 mA light
T30AD9FF150Q	Integral 4-pin M12 male quick-disconnect connector			

Overview

T30AD9FF150 NAMU Series Sensor is a self-contained fixed-field sensors are small, powerful, infrared diffuse mode sensors with far-limit cutoff (a type of background suppression). The sensor is designed for use with certified intrinsically safe switching amplifiers and barriers (Approved Apparatus) with intrinsically safe circuits. The T30AD9FF150 NAMU Series Sensor is designed in accordance with DIN 19234 (IEC/EN 60947-5-6) for operation via two-wire connection to an Approved Apparatus controlled by the variable internal resistance of the sensor.

Their high excess gain and fixed-field technology allow detection of objects of low reflectivity, while ignoring background surfaces. The cutoff distance is fixed. Backgrounds and background objects must always be placed beyond the cutoff distance.

Models are available with either a 2 m (6.5 ft) long attached PVC-covered cable or a 4-pin M12 quick disconnect (QD) connector. Quick disconnect models (with "Q" in the model number suffix) use MQD9-4.. mating cable (either straight or right angle connector; see "Accessories" on page 7). Contact Banner Engineering for availability of sensor models with 9 m (30 ft) long attached cable.

Fixed-Field Sensing Theory of Operation

The T30AD9FF150 NAMU Series Sensor compares the reflections of its emitted light beam (E) from an object back to the sensor's two differently aimed detectors, R1 and R2. See "Figure: Fixed-Field Concept" on page 2. If the near detector's (R1) light signal is stronger than the far detector's (R2) light signal (see object A in the Figure below, closer than the cutoff distance), the sensor responds to the object. If the far detector's (R2) light signal is stronger than the near detector's (R1) light signal (see object B in the Figure below, beyond the cutoff distance), the sensor ignores the object.

The cutoff distance for the T30AD9 is fixed at 150 mm (5.9 in). Objects lying beyond the cutoff distance are usually ignored, even if they are highly reflective. However, under certain conditions, it is possible to falsely detect a background object (see "Background Reflectivity and Placement" on page 4).

Original Instructions
09-Jul-26

© Banner Engineering Corp. All rights reserved.
www.bannerengineering.com

41685
p/n: 41685 Rev I

ПРОМЭЛЕКТРОНИКА/ sales@prom-elec.com

Fixed-Field Concept

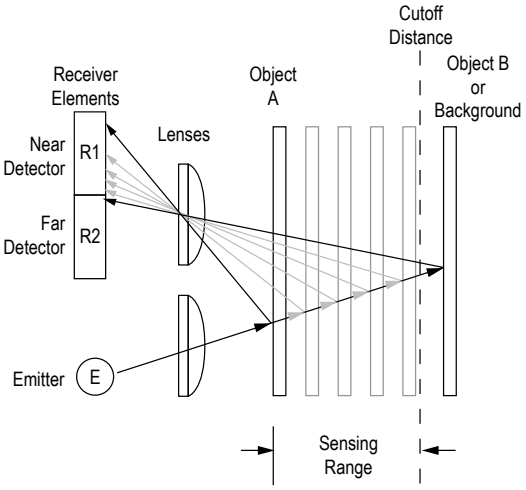

Object is sensed if amount of light at R1 is greater than the amount of light at R2

Fixed-Field Sensing Axis

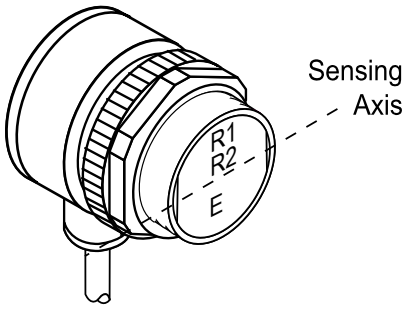

In the drawings and information provided in this document, the letters E, R1, and R2 identify how the sensor's three optical elements (Emitter "E", Near Detector "R1", and Far Detector "R2") line up across the face of the sensor. The location of these elements defines the sensing axis, see "Figure: Fixed-Field Sensing Axis" on page 2.

The sensing axis becomes important in certain situations, such as when the object is beyond the cutoff distance as shown in "Background Reflectivity and Placement" on page 4.

Installation Instructions

Ex/HazLoc Applications

WARNING:
- **Explosive Atmospheres/Hazardous Locations**
- It is the user's responsibility to ensure that all local, state, and national laws, rules, codes, or regulations relating to the installation and use of this device in any particular application are satisfied. This device must be installed by a Qualified Person[1], in accordance with this document and applicable regulations.

WARNING:
- **Explosion Hazard**
- Do not disconnect equipment unless the power has been switched off or the area is known to be non-hazardous.

WARNING:
- **Electrostatic Discharge (ESD) Specific Conditions for Safe Use**
- Parts of the enclosure are non-conducting and can generate an ignition-capable level of ESD.
- To reduce the risk of ignition due to electrostatic discharge, avoid contact with the equipment while an explosive atmosphere is present.
- Clean the equipment with only a damp cloth.

Specific Conditions for Use and General Notes:
- See Specifications and Wiring Diagrams for important information concerning entity parameters, permissible locations, electrical connections and certifications.
- In addition to the warning above concerning user responsibility, the installation must comply with the following:

[1] A Qualified Person is a person who, by possession of a recognized degree or certificate of professional training, or who, by extensive knowledge, training and experience, has successfully demonstrated the ability to solve problems relating to the subject matter and work.

© Banner Engineering Corp. All rights reserved.
www.bannerengineering.com

- All installations must comply with all manufacturer's instructions.
- U.S. Installations: The relevant requirements of the National Electrical Code® (ANSI/NFPA-70 (NEC®) and when appropriate ANSI/ISA-RP12.06.01 Installation of Intrinsically Safe Systems for Hazardous (Classified) Locations.
- Canadian Installations: The relevant requirements of the Canadian Electrical Code (CSA C22.1).
- ATEX and IECEx Installations: The relevant requirements of EN IEC 60079-14 and applicable National regulations.
- For quick disconnect (QD) models only: Use Banner **MQD9-4##** cordsets (see "Cordsets" on page 7), or suitable M12 quick disconnect cordsets with threaded retaining nut (see Specifications), The cordset must be securely fastened using the M12x1 QD retaining nut to prevent disconnection. Maximum connector torque: 6 ft-lbs.

- Do not attempt any repairs to this device; it contains no field-replaceable parts or components. Tampering and/or replacement with non-factory components may adversely affect the safe use of the system.
- Approved Apparatus entity parameters must meet the following requirements:
  - o V_{oc} or $V_t \leq V_{max}$
  - o $C_a \geq C_i + C_{cable}$
  - o I_{sc} or $I_t \leq I_{max}$
  - o $La \geq L_i + L_{cable}$
- Sensor Entity Parameters:
  - V_{max} (Ui) ≤ 30 V dc
  - I_{max} (Ii) ≤ 35 mA
  - C_i = 0 µF
  - L_i = 0 mH
- Cable Entity Parameters (if unknown):
  - C_{cable} = 60 pF/ft
  - L_{cable} = 0.2 µH/ft
- The ambient operating temperature range of the Sensors is –40 °C to +70 °C (–40 °F to +158 °F).
- For intrinsically safe installations, sensors must be used with certified intrinsically safe switching amplifiers and barriers (Approved Apparatus) with intrinsically safe circuits that limit supply voltage and current in the event of failures.
- Maximum non-hazardous area voltage that the Approved Apparatus (intrinsically safe circuit) is connected to must not exceed 250V.
- Intrinsic safety ground, if required for the Associated Apparatus, shall be less than 1 ohm.

Wiring

The T30AD9FF150 NAMU Series Sensor is intrinsically safe ONLY when used with certified intrinsically safe switching amplifiers and barriers (Approved Apparatus) with intrinsically safe circuits. Banner does not manufacture such devices; however, our applications engineers can refer you to suppliers of certified devices that will interface with Banner sensors.

The user is responsible for the proper installation and maintenance of this equipment and must conform with the certification requirements relating to barriers and to maximum allowable capacitance and inductance of the field wiring. If in doubt about these requirements, our applications engineers can refer you to the appropriate authority.

Cabled models

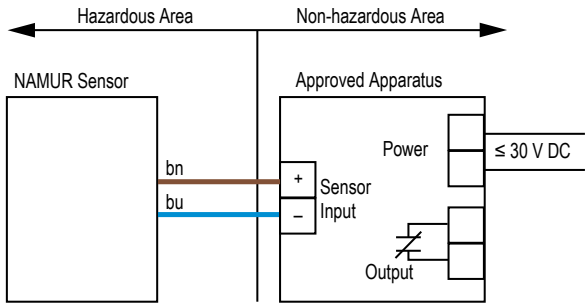

Quick disconnect models

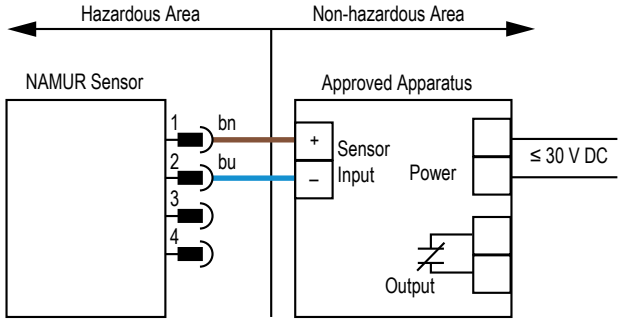

4-pin M12 male pinout

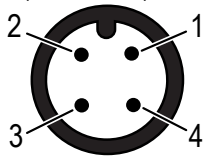

1. Brown
2. Blue
3. Not used
4. Not used

© Banner Engineering Corp. All rights reserved.
www.bannerengineering.com

Configuration Instructions

Sensing Reliability

For the highest sensitivity, position the target for sensing at or near the point of maximum excess gain. Maximum excess gain for all models occurs at a lens-to-object distance of about 40 mm (1.5 in). Sensing at or near this distance makes maximum use of each sensor's available sensing power. The background must be placed beyond the cutoff distance. Note that the reflectivity of the background surface also may affect the cutoff distance. Following these guidelines improves sensing reliability.

Background Reflectivity and Placement

Avoid mirror-like backgrounds that produce specular reflections. A false sensor response occurs if a background surface reflects the sensor's light more to the near detector (R1) than to the far detector (R2). The result is a false ON condition ("Figure: Reflective Background - Problem" on page 4). Correct this problem by using a diffusely reflective (matte) background or angling either the sensor or the background (in any plane) so the background does not reflect light back to the sensor ("Figure: Reflective Background - Solution" on page 4). Position the background as far beyond the cutoff distance as possible.

An object beyond the cutoff distance, either stationary (and when positioned as shown in "Figure: Object Beyond Cutoff - Problem" on page 4), or moving past the face of the sensor in a direction perpendicular to the sensing axis, may cause unwanted triggering of the sensor if more light is reflected to the near detector than to the far detector. Correct the problem by rotating the sensor 90° ("Figure: Object Beyond Cutoff - Solution" on page 4). The object then reflects the R1 and R2 fields equally, resulting in no false triggering. A better solution, if possible, may be to reposition the object or the sensor.

Reflective Background - Problem

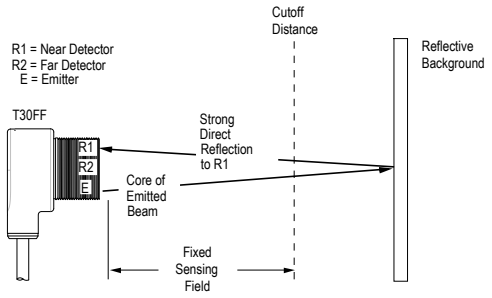

Reflective Background - Solution

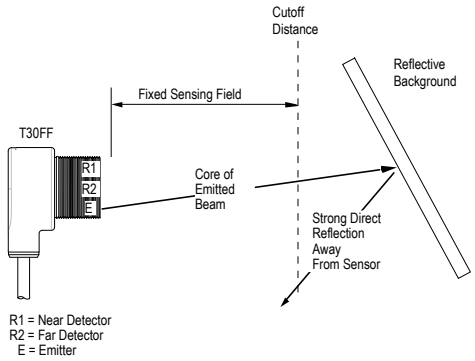

A reflective background object in this position or moving across the sensor face in this axis and direction may cause a false sensor response.

Object Beyond Cutoff - Problem

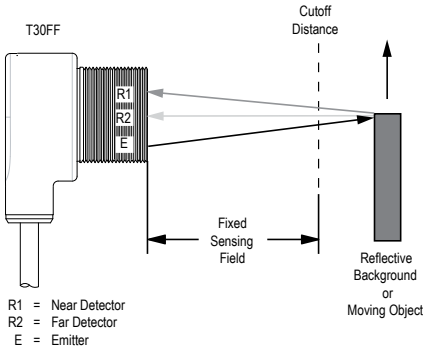

Object Beyond Cutoff - Solution

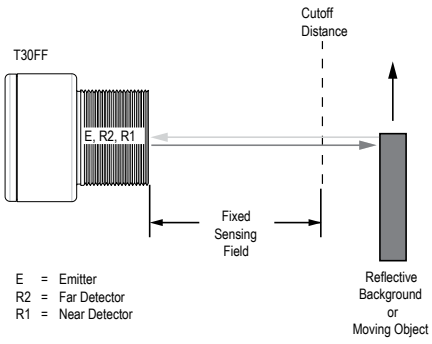

A reflective background object in this position or moving across the sensor face in this axis is ignored.

Color Sensitivity

The effects of object reflectivity on cutoff distance, though small, may be important for some applications. It is expected that at any given cutoff setting, the actual cutoff distance for lower reflectance targets is slightly shorter than for higher reflectance targets. This behavior is known as color sensitivity.

For example, an excess gain of 1 for an object that reflects 1/10 as much light as the 90% white card is represented by the horizontal graph line at excess gain = 10. An object of this reflectivity results in a far-limit cutoff of approximately 120 mm (5.1 in) cutoff model, for example; and 130 mm represents the cutoff for this sensor and target.

© Banner Engineering Corp. All rights reserved.
www.bannerengineering.com

These excess gain curves were generated using a white test card of 90% reflectance. Objects with reflectivity of less than 90% reflect less light back to the sensor and thus require proportionately more excess gain to be sensed with the same reliability as more reflective objects. When sensing an object of very low reflectivity, it may be essential to sense it at or near the distance of maximum excess gain.

Specifications

Supply Voltage and Current
5 to 30 V DC (provided by the amplifier to which the sensor is connected)

Output
Constant current output; ≤1.2 mA in the dark condition and ≥2.1 mA in the light condition

Output Response Time
10 ms on/off (does not include amplifier response)

Sensing Beam
Infrared (880 nm)

Cutoff Distance
150 mm (5.9 in), referenced to a 90% reflectance white test card. See excess gain curve.

Connections
2 m (6.5 ft) attached PVC covered cable or 4-pin M12 quick-disconnect (QD) fitting, depending on model. QD cable must be purchased separately.

Connecting 4-pin M12 QD Cordsets (see "Cordsets" on page 7): Female single-ended Multiconductor cable (at minimum): UL Style 2517, 24 AWG wire, rated ≥ 80 °C; M12 QD connector: per IEC 61076-2-101, must have threaded M12 × 1 retaining nut.

Indicators
Red indicator LED on rear panel turns on when the sensor sees a light condition.

Construction
Yellow PBT enclosure, PBT rear cover. Acrylic lens. M30xl,5 threaded lens housing with two mounting nuts supplied. Banner tested to NEMA standards 1, 2, 3, 3S, 4, 4X, 6, 6P, 12, and 13. IEC IP67.

Vibration and Mechanical Shock
Meets Mil. Std. 202F requirements. Method 201A (Vibration: frequency 10 to 60 Hz max., double amplitude 0.06-inch, maximum acceleration 10G). Method 213B conditions H & I (Shock: 75G with unit operating; 100G for non-operation).

Operating Conditions
–40 °C to +70 °C (–40 °F to +158 °F)

Application Note
Special Conditions for Safe Use: Parts of the enclosure are non-conducting and may generate an ignition-capable level of ESD. Cleaning of the equipment must be done only with a damp cloth.

Design Standards	
ATEX (European)	EN IEC 60079-0, EN 60079-11
Canada	CAN/CSA C22.2: No.0-M91, No.142-M1987, No.157-92, No.213-M1987, No.1010.1, E60079-0 and E60079-11
United States	FM Class 3600, 3610, and 3810; ANSI/ISA 61010-1 (82.02.01), 60079-0 and 60079-11
IECEx	IEC 60079-0, IEC 60079-11

Certifications

IEC IECEx FMG 14.0029X
ATEX FM12ATEX0094X
FM CoC 0003046293 (US)
FM CoC 0003046293C (CAN)

Approvals	
T30AD9FF150, T30AD9FF150Q	
ATEX (European)	II 1 G Ex ia IIC T6 Ga Ta = –40°C to 70°C - 41685; Entity Entity Parameters: U_i = 30 V dc, I_i = 35 mA, C_i = 0 µF, L_i = 0 mH.
Canadian	IS / I,II,III / 1 / ABCDEFG / T6 Ta = –40°C to 70°C - 41685; Entity I / 0 / Ex ia / IIC / T6 Ta = –40°C to 70° C - 41685; Entity Entity Parameters: V_{Max} = 30 V dc, I_{Max} = 35 mA, C_i = 0 µF, L_i = 0 mH
United States	IS / I,II,III / 1 / ABCDEFG / T6 Ta = –40°C to 70°C - 41685; Entity I / 0 / AEx ia / IIC / T6 / Ga Ta = –40°C to 70°C - 41685; Entity Entity Parameters: V_{Max} = 30 V dc, I_{Max} = 35 mA, C_i = 0 µF, L_i = 0 mH
IECEx	Ex ia IIC T6 Ga Ta = –40 °C to +70 °C - 41685; Entity Entity Parameters: U_i = 30 V dc, I_i = 35 mA, C_i = 0 µF, L_i = 0 mH.

© Banner Engineering Corp. All rights reserved.
www.bannerengineering.com

INSTALL PER DRAWING 41685

T30AD9FF150

FM APPROVED

2809

II 1 G
Ex ia IIC T6 Ga
Ta = -40°C to +70°C
IECEx FMG 14.0029X

FM12ATEX0094X
FM20US0068X
FM20CA0032X

Banner Engineering Corp.
Mpls, MN 55441 USA

CL I/II/III Div 1 Groups ABCDEFG T6
CL I Zone 0 AEx ia IIC T6 Ga

Banner Engineering Europe
Diegem BE 1831

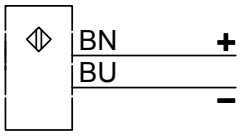

INSTALL PER DRAWING 41685

T30AD9FF150Q

FM APPROVED

2809

II 1 G
Ex ia IIC T6 Ga
Ta = -40°C to +70°C
IECEx FMG 14.0029X

FM12ATEX0094X
FM20US0068X
FM20CA0032X

Banner Engineering Corp.
Mpls, MN 55441 USA

CL I/II/III Div 1 Groups ABCDEFG T6
CL I Zone 0 AEx ia IIC T6 Ga

Banner Engineering Europe
Diegem BE 1831

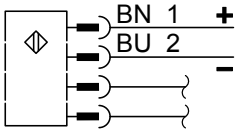

Performance

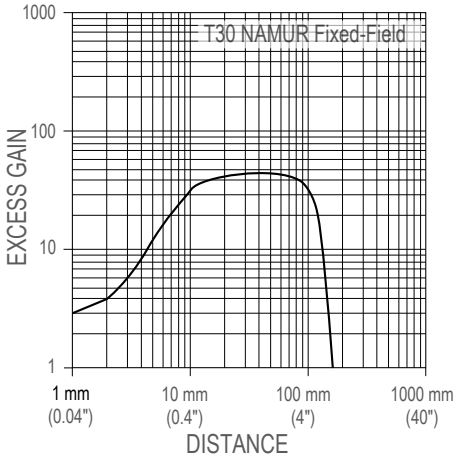

Performance is based on the use of a 90% reflectance white test card.

Using 18% gray test card: cutoff distance is 95% of the value shown.

Using 6% black test card: cutoff distance is 90% of the value shown.

Dimensions

Cabled models (left) and quick disconnect models (right)

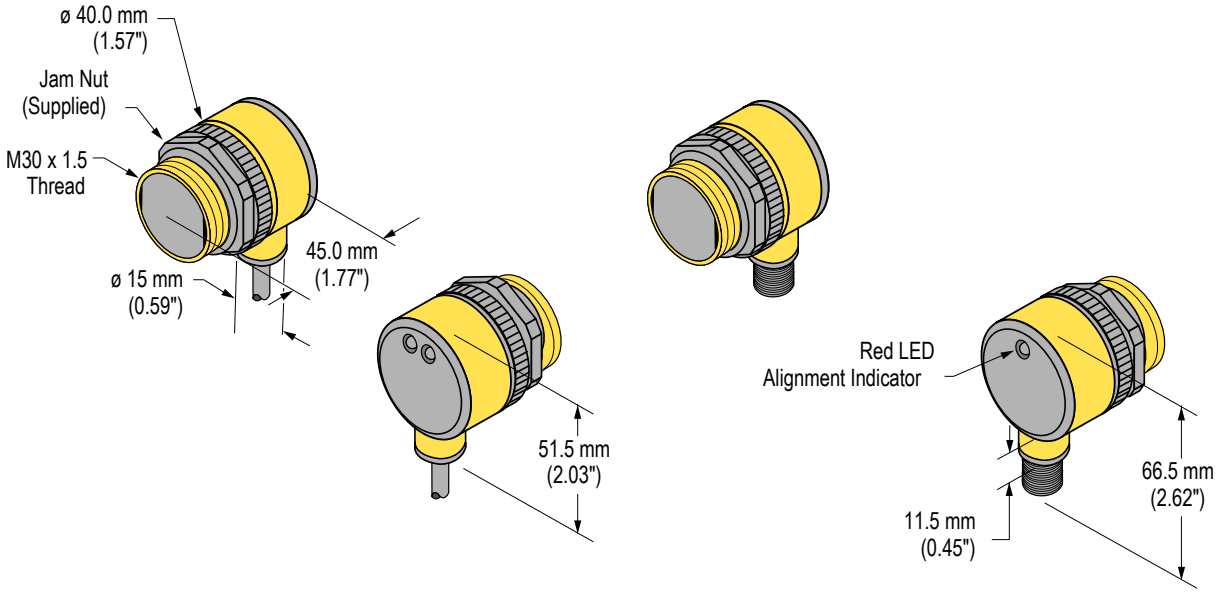

© Banner Engineering Corp. All rights reserved.
www.bannerengineering.com

Accessories

Cordsets

4-Pin Single-Ended M12 Female Cordsets (for use with NAMUR sensors)					
Model	**Length**	**Style**	**Dimensions**	**Pinout (Female)**	
MQD9-406	2 m (6.56 ft)	Straight	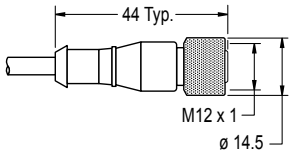		1 = Brown 2 = Blue
MQD9-415	5 m (16.4 ft)				
MQD9-430	9 m (29.5 ft)				
MQD9-406RA	2 m (6.56 ft)	Right-Angle	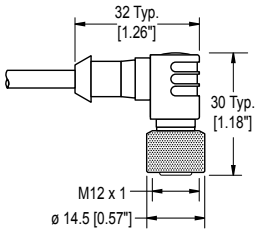	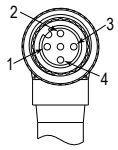	
MQD9-415RA	5 m (16.4 ft)				
MQD9-430RA	9 m (29.5 ft)				

Brackets

T30 Series sensors may also be mounted in a 30 mm clearance hole up to 15 mm (0.6 in) deep, using the supplied jam nut(s). All measurements are in mm

SMB30A

- Right-angle bracket with curved slot for versatile orientation
- Clearance for M6 (¼ in) hardware
- Mounting hole for 30 mm sensor
- 12-gauge stainless steel
- CAD Files: DXF, PDF, IGS, STP

Hole center spacing: A to B=40
Hole size: A=ø 6.3, B= 27.1 × 6.3, C=ø 30.5

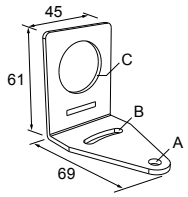

SMB30SC

- Swivel bracket with 30 mm mounting hole for sensor
- Black reinforced thermoplastic polyester
- Stainless steel mounting and swivel locking hardware included
- CAD Files: DXF, PDF, IGS, STP

Hole center spacing: A=ø 50.8
Hole size: A=ø 7.0, B=ø 30.0

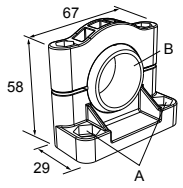

Repairs and Translations (No Field-Replaceable Parts)

English

Contact Banner Engineering for troubleshooting of this device. **Do not attempt any repairs to this Banner device; it contains no field-replaceable parts or components.** If the device, device part, or device component is determined to be defective by a Banner Applications Engineer, they will advise you of Banner's RMA (Return Merchandise Authorization) procedure.

```
IMPORTANT: If instructed to return the device, pack it with care. Damage that occurs in return shipping is
not covered by warranty.
```

Obtain assistance with product repairs by contacting your local Banner Engineering Corp distributor or by calling Banner directly at (763) 544-3164. Access literature translated into your native language on the Banner website at www.bannerengineering.com or contact Banner directly at (763) 544-3164.

© Banner Engineering Corp. All rights reserved.
www.bannerengineering.com

Deutsch

Wenden Sie sich zur Fehlerbehebung dieses Geräts an Banner Engineering. **Versuchen Sie nicht, Reparaturen an diesem Banner-Gerät vorzunehmen. Das Gerät enthält keine am Einsatzort auszuwechselnden Teile oder Komponenten.** Wenn ein Banner-Anwendungstechniker zu dem Schluss kommt, dass dieses Gerät, ein Teil oder eine Komponente davon defekt ist, erhalten Sie von dem Techniker Erläuterungen zu Banners RMA-Verfahren (Return Merchandise Authorization) für die Warenrückgabe.

WICHTIG: Wenn Sie der Techniker anweist, das Gerät zurückzusenden, verpacken Sie es bitte sorgfältig. Transportschäden bei der Rücksendung werden von der Garantie nicht abgedeckt.

Unterstützung bei Produktreparaturen erhalten Sie von Ihrem örtlichen Banner Engineering Corp Händler oder direkt von Banner unter Tel. (763) 544-3164. Die in Ihre Muttersprache übersetzte Literatur finden Sie auf der Banner-Website unter www.bannerengineering.com oder kontaktieren Sie Banner direkt unter Tel. (763) 544-3164.

Français

Pour plus d'informations sur le dépannage du produit, contactez Banner Engineering. **Ne tentez pas de réparer ce dispositif Banner. Il ne contient aucun composant ou pièce qui puisse être remplacé sur place.** Si un ingénieur de Banner conclut que le dispositif ou l'une de ses pièces ou composants est défectueux, il vous informera de la procédure à suivre pour le retour des produits (RMA).

Important : Si vous devez retourner le dispositif, emballez-le avec soin. Les dégâts occasionnés pendant le transport de retour ne sont pas couverts par la garantie.

Pour vous aider lors de la réparation de produits, contactez votre distributeur Banner local our appelez directement Banner au (763) 544-3164. La documentation traduite dans votre langue est disponible sur le site internet de Banner www.bannerengineering.com ou contactez directement Banner au (763) 544-3164.

Italiano

Per le procedure di individuazione e riparazione dei guasti di questo dispositivo, contattare Banner Engineering. **Non tentare di riparare questo dispositivo Banner, in quanto non contiene parti o componenti sostituibili dall'utente.** Se il dispositivo, una parte del dispositivo o un componente del dispositivo viene riscontrato difettoso da un tecnico Banner, il nostro personale vi comunicherà la procedura da seguire per ottenere l'autorizzazione al reso.

Importante: Se si ricevono istruzioni di rispedire il dispositivo al produttore, imballarlo con cura. I danni dovuti al trasporto non sono coperti dalla garanzia.

Per assistenza nelle riparazioni dei prodotti, contattare il distributore locale Banner Engineering Corp o contattare direttamente Banner al numero (763) 544-3164. È possibile accedere alla documentazione tradotta nella propria lingua madre sul sito Web Banner all'indirizzo www.bannerengineering.com o contattare direttamente Banner al numero (763) 544-3164.

Español

Comuníquese con Banner Engineering para solucionar de problemas de este dispositivo. **No intente ninguna reparación a este dispositivo de Banner, contiene piezas o componente que no se pueden cambiar en terreno.** Si algún ingeniero de aplicaciones de Banner determina que el dispositivo, alguna de las piezas o alguno de los componentes del dispositivo está defectuoso, le informará el procedimiento de autorización de devolución de mercancía (RMA, por sus siglas en inglés) de Banner.

Importante: Si se le solicita devolver el dispositivo, empáquelo con cuidado. Puede haber daños durante el envío de devolución que no estén cubiertos por la garantía.

Para reparaciones de productos, por favor contacte a su distribuidor local de Banner Engineering o llame a Banner directamente al 00 1 (763) 544-3164. Vea la literatura traducida en su idioma en el sitio web Banner en www.bannerengineering.com o comuníquese con Banner directamente al 00 1 (763) 544-3164.

中国人

如需对本装置进行故障排查，请联系邦纳。**请勿尝试自行维修该邦纳装置；本装置不包含任何可在现场更换的部件或组件。** 若经邦纳应用工程师确认设备、设备部件或组件存在缺陷，他们将告知您邦纳退货授权 (RMA) 流程。

重要注意事项： 如被要求退回装置，请妥善包装后寄回。退货运输过程中发生的损坏不在保修范围内。

请联系当地的 Banner Engineering Corp 经销商或直接致电 Banner +1 (763) 544-3164，以获得产品维修帮助。请访问邦纳网站 www.bannerengineering.com 或直接拨打 +1 (763) 544-3164 联系邦纳，获取翻译成您母语的资料。

한국인

이 장치의 문제를 해결하려면 Banner Engineering에 문의하십시오. **이 Banner 장치에는 현장에서 교체할 수 있는 부품 또는 구성품이 없으므로 수리를 시도하지 마십시오.** Banner 애플리케이션 엔지니어가 장치, 장치 부품 또는 장치 구성품에 결함이 있는 것으로 판정하면, Banner의 RMA(제품 반송 승인)절차에 대해 안내해 드립니다.

중요: 제품을 반송하도록 안내 받으셨다면 잘 포장해주십시오. 반송 도중에 발생한 손상은 보증 서비스가 적용되지 않습니다.

제품 수리에 대한 지원은 지역 Banner Engineering Corp 대리점에 문의하거나 Banner에 직접 (763) 544-3164로 문의하실 수 있습니다. 사용자의 모국어로 번역된 자료는 Banner 웹사이트 www.bannerengineering.com에서 액세스하거나 Banner에 직접 (763) 544-3164로 문의하실 수 있습니다.

© Banner Engineering Corp. All rights reserved.
www.bannerengineering.com

日本語

この装置のトラブルシューティングについては、バナーエンジニアリングにお問い合わせください。**このバナー装置には、現場では交換できない部品またはコンポーネントが含まれているため、修理を試みてはいけません。** バナーのアプリケーションエンジニアが装置、装置の部品、または装置のコンポーネントに欠陥があると判断した場合、バナーのRMA（返品承認）手続きについてお知らせします。

重要 ： 返品を指示された場合は、装置を丁寧に梱包してください。返品時に発生した破損は保証の対象外となります。

製品の修理については、最寄りのBanner Engineering Corp代理店にお問い合わせいただくか、米国+1 (763) 544-3164まで直接お電話でお問い合わせください。バナーのウェブサイト（www.bannerengineering.com）でお客様の言語に翻訳された資料にアクセスするか、米国+1 (763) 544-3164まで直接お電話でお問い合わせください。

čeština

Pro řešení problémů se zařízením kontaktujte společnost Banner Engineering. **Neprovádějte žádné opravy zařízení Banner. Neobsahují žádné komponenty nebo části, které by byly vyměnitelné.** Pokud je zařízení, jeho část nebo díl označen technikem společnosti Banner jako poškozený, bude Vám doporučeno vyplnit reklamační RMA protokol.

Důležité: Pokud byl vydán požadavek na vrácení zařízení, pečlivě ho zabalte. Poškození vzniklé při dopravě není považováno za záruční opravu.

Pokud produkt potřebuje opravu, vyžádejte si pomoc od místního distributora společnosti Banner Engineering Corp nebo přímo na telefonním čísle (763) 544-3164. Dokumentaci přeloženou do vašeho jazyka si vyhledejte na webových stránkách společnosti Banner na adrese www.bannerengineering.com nebo se obraťte přímo na společnost Banner na telefonním čísle (763) 544-3164.

Polski

W celu rozwiązania problemów z urządzeniem należy skontaktować się z działem technicznym firmy Banner Engineering. **Pod żadnym pozorem nie próbuj naprawiać tego urządzenia firmy Banner; nie zawiera ono części ani elementów, które można wymieniać samodzielnie.** Jeśli urządzenie, jego część lub element zostaną uznane za wadliwe przez inżyniera technicznego Banner, poinformuje on użytkownika o firmowej procedurze zwrotu towaru (RMA) firmy Banner.

Ważne: Jeśli urządzenie ma zostać zwrócone, należy je starannie zapakować. Uszkodzenia powstałe podczas odsyłki nie są objęte gwarancją.

Aby uzyskać pomoc w zakresie naprawy produktu, należy skontaktować się z lokalnym dystrybutorem Banner Engineering Corp lub zadzwonić bezpośrednio do firmy Banner pod numer (763) 544-3164. Dostęp do literatury przetłumaczonej na swój język ojczysty można uzyskać na stronie internetowej firmy Banner pod adresem www.bannerengineering.com lub kontaktując się bezpośrednio z firmą Banner pod numerem (763) 544-3164.

Português

Entre em contato com a Engenharia da Banner para a solução de problemas deste dispositivo. **Não tente fazer nenhum reparo neste dispositivo Banner; ele não contém peças ou componentes substituíveis em campo.** Se um técnico de aplicações da Banner determinar que o dispositivo, peça ou componente do dispositivo está com defeito, ele o informará sobre o procedimento de RMA (Autorização de Devolução de Mercadoria) da Banner.

Importante: Se for instruído a devolver o dispositivo, embale-o com cuidado. Os danos ocorridos no transporte de devolução não são cobertos pela garantia.

Obtenha assistência para reparos do produto entrando em contato com o distribuidor local da Banner Engineering Corp ou ligando diretamente para a Banner no telefone (763) 544-3164. Acesse a literatura traduzida para seu idioma nativo no site da Banner em www.bannerengineering.com ou entre em contato diretamente com a Banner pelo telefone (763) 544-3164.

Türkçe

Bu cihazda sorun giderme işlemleri için Banner Engineering ile iletişime geçin. **Bu Banner cihazını onarmaya çalışmayın; cihaz sahada değiştirilebilir parça veya bileşen içermez.** Bir Banner Uygulama Mühendisi tarafından cihazın, cihazın bir parçasının veya bir cihaz bileşeninin kusurlu olduğu tespit edilirse, Banner RMA (İade Mal Yetkilendirme) prosedürü hakkında bilgilendirilirsiniz.

ÖNEMLİ: İade etmeniz istenirse, cihazı dikkatli bir şekilde paketleyin. İade nakliyesinde meydana gelecek hasarlar garanti kapsamında değildir.

Yerel Banner Engineering Corp distribütörünüzle iletişime geçerek veya doğrudan (763) 544-3164 numaralı telefondan Banner'ı arayarak ürün onarımlarıyla ilgili yardım alın. Ana dilinize çevrilmiş dokümanlara www.bannerengineering.com adresindeki Banner web sitesinden erişebilir veya (763) 544-3164 numaralı telefondan doğrudan Banner ile iletişime geçebilirsiniz.

Banner Engineering Corp Limited Warranty

Banner Engineering Corp. warrants its products to be free from defects in material and workmanship for one year following the date of shipment. Banner Engineering Corp. will repair or replace, free of charge, any product of its manufacture which, at the time it is returned to the factory, is found to have been defective during the warranty period. This warranty does not cover damage or liability for misuse, abuse, or the improper application or installation of the Banner product.

THIS LIMITED WARRANTY IS EXCLUSIVE AND IN LIEU OF ALL OTHER WARRANTIES WHETHER EXPRESS OR IMPLIED (INCLUDING, WITHOUT LIMITATION, ANY WARRANTY OF MERCHANTABILITY OR FITNESS FOR A PARTICULAR PURPOSE), AND WHETHER ARISING UNDER COURSE OF PERFORMANCE, COURSE OF DEALING OR TRADE USAGE.

This Warranty is exclusive and limited to repair or, at the discretion of Banner Engineering Corp., replacement. **IN NO EVENT SHALL BANNER ENGINEERING CORP. BE LIABLE TO BUYER OR ANY OTHER PERSON OR ENTITY FOR ANY EXTRA COSTS, EXPENSES, LOSSES, LOSS OF PROFITS, OR ANY INCIDENTAL, CONSEQUENTIAL OR SPECIAL DAMAGES RESULTING FROM ANY PRODUCT DEFECT OR FROM THE USE OR INABILITY TO USE THE PRODUCT, WHETHER ARISING IN CONTRACT OR WARRANTY, STATUTE, TORT, STRICT LIABILITY, NEGLIGENCE, OR OTHERWISE.**

© Banner Engineering Corp. All rights reserved.
www.bannerengineering.com

Banner Engineering Corp. reserves the right to change, modify or improve the design of the product without assuming any obligations or liabilities relating to any product previously manufactured by Banner Engineering Corp. Any misuse, abuse, or improper application or installation of this product or use of the product for personal protection applications when the product is identified as not intended for such purposes will void the product warranty. Any modifications to this product without prior express approval by Banner Engineering Corp will void the product warranties. All specifications published in this document are subject to change; Banner reserves the right to modify product specifications or update documentation at any time. Specifications and product information in English supersede that which is provided in any other language. For the most recent version of any documentation, refer to: www.bannerengineering.com.

For patent information, see www.bannerengineering.com/patents.

© Banner Engineering Corp. All rights reserved.