USB Serial Adapter – Model INTUSB485-1

Adapter for EZ-ARRAY® 5-pin Communications Cable to PC USB Port



Features

- Easy-to-use USB-to-485 adapter connects to a USB port on a computer or USB hub.
- Easy plug-and-play and hot plug features simplify connection of an RS-422 or RS-485 serial device.

Overview

When plugged into the USB port, the USB industrial I/O adapter is automatically detected and installed. There are no IRQ or COM port conflicts, since the port requires no additional IRQ, DMA or memory. The adapter's RS-422/485 port functions as a native Windows COM port, and it is compatible with Windows serial communication applications. Each port is individually configurable. The INTUSB485-1 is powered via the USB interface; no additional power supply is needed.

When using the PC-based EZ-ARRAY Control Software to configure the EZ-ARRAY, the INTUSB485-1 provides a quick solution to convert from a universal serial bus interface to the EZ-ARRAY RS-485 interface.

Simply connect the EZ-ARRAY cable (model MQDMC-5..) to the terminal strip to configure the EZ-ARRAY receiver (refer to the EZ-ARRAY Users Manual p/n 130426 for configuration information). Included with the INTUSB485-1 is the USB cable and supplied software to connect with the PC. A four-position DIP switch on the external housing must be set as shown in Figure 1 (default positions), and eight jumpers inside the housing must be configured as shown in Figure 2.

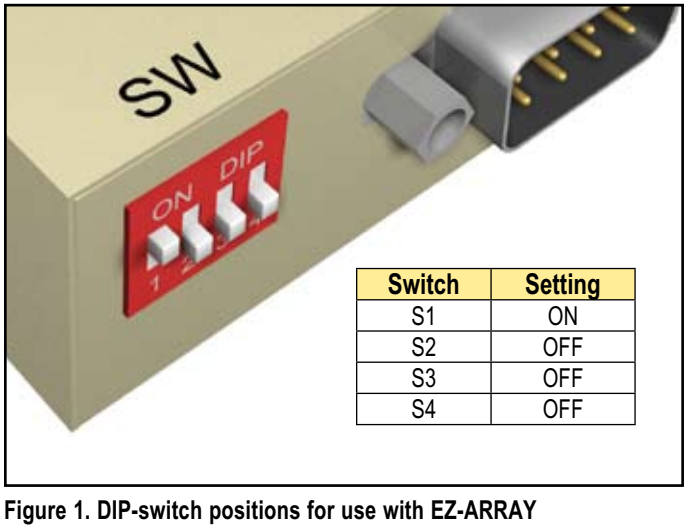

Switch	Setting
S1	ON
S2	OFF
S3	OFF
S4	OFF

Figure 1. DIP-switch positions for use with EZ-ARRAY

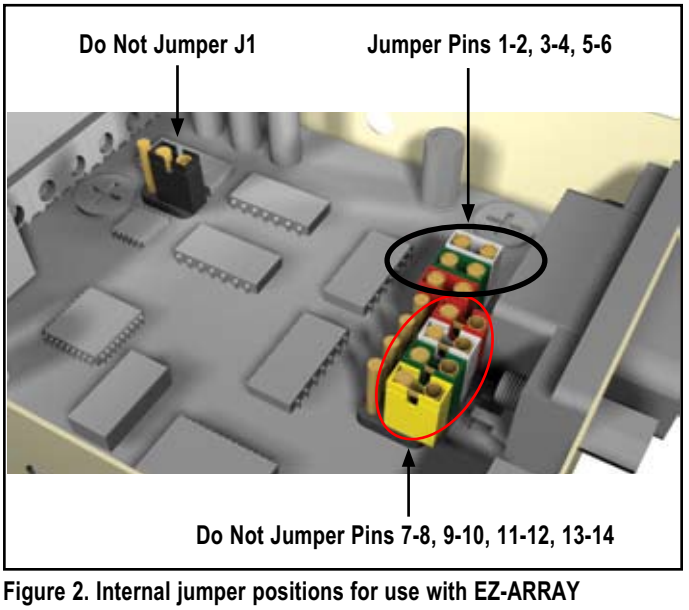

Figure 2. Internal jumper positions for use with EZ-ARRAY

ПРОМЭЛЕКТРОНИКА/ sales@prom-elec.com

USB Serial Adapter – Model INTUSB485-1

Specifications

Environmental Rating	IEC IP10, NEMA 1
Operating Conditions	**Temperature:** 0° to +50° C (+32° to 121° F) **Max. Relative Humidity:** 90% at 50° C (non-condensing)
Certifications	CE

Dimensions

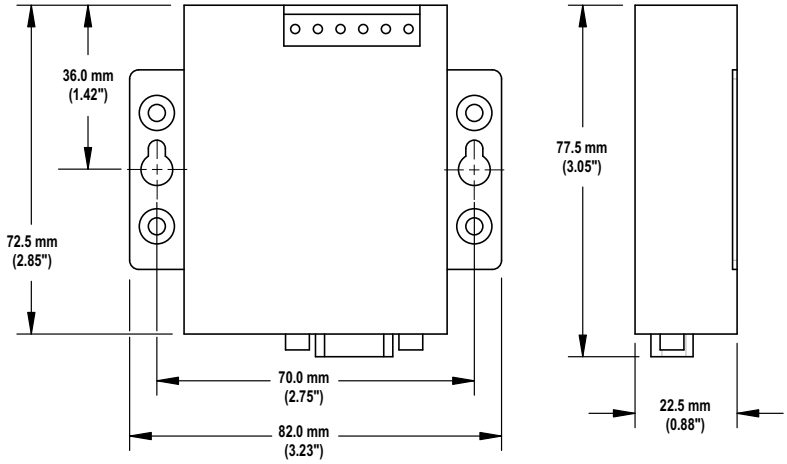

Hookup

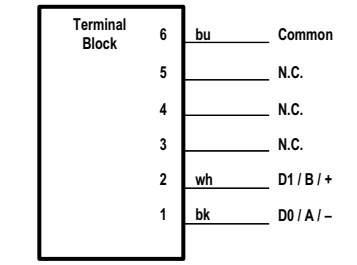

Connection of MQDMC-5.. cable to adapter terminal block

more sensors, more solutions

WARRANTY: Banner Engineering Corp. warrants its products to be free from defects for one year. Banner Engineering Corp. will repair or replace, free of charge, any product of its manufacture found to be defective at the time it is returned to the factory during the warranty period. This warranty does not cover damage or liability for the improper application of Banner products. This warranty is in lieu of any other warranty either expressed or implied.

P/N 130144

Banner Engineering Corp., 9714 Tenth Ave. No., Minneapolis, MN USA 55441 • Phone: 763.544.3164 • www.bannerengineering.com • Email: sensors@bannerengineering.com