R-GAGE® Q130RA Sensor

Quick Start Guide

Radar-Based Sensors for Detection of Moving and Stationary Targets

This guide is designed to help you set up and install the Q130RA. For complete information on programming, performance, troubleshooting, dimensions, and accessories, please refer to the Instruction Manual at www.bannerengineering.com. Search for p/n 208831 to view the Instruction Manual. Use of this document assumes familiarity with pertinent industry standards and practices.

Important: To satisfy RF exposure requirements, this device and its antenna must operate with a separation distance of at least 20 cm from all persons.

WARNING:

- **Do not use this device for personnel protection**
- Using this device for personnel protection could result in serious injury or death.
- This device does not include the self-checking redundant circuitry necessary to allow its use in personnel safety applications. A device failure or malfunction can cause either an energized (on) or de-energized (off) output condition.

Features and Indicators

Figure 1. R-GAGE Features

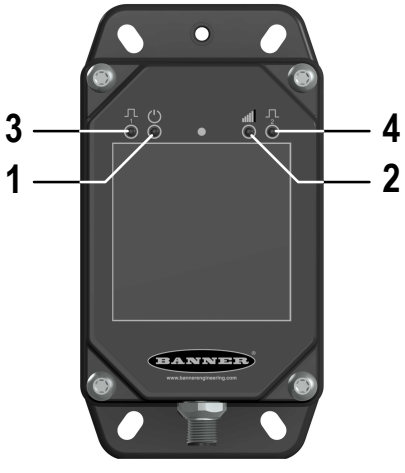

	LED	Color	Description
1	Power	Green	Power ON
2	Signal Strength	Red	Flashes in proportion to the signal strength
3	Output 1	Amber	Output energized
4	Output 2	Amber	Output energized

Installation Instructions

Mount the Device

1. If a bracket is needed, mount the device onto the bracket.
2. Mount the device (or the device and the bracket) to the machine or equipment at the desired location. Do not tighten the mounting screws at this time.
3. Check the device alignment.

   This is done via the red Signal Strength LED or the Banner Radar Configuration Software.
4. Tighten the mounting screws to secure the device (or the device and the bracket) in the aligned position.

Wiring

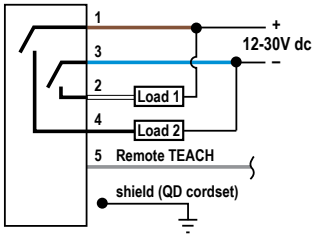

Key:

1 = Brown
2 = White
3 = Blue
4 = Black
5 = Gray (Connect for use with remote input)

Note: Banner recommends that the shield wire (quick-disconnect cordsets only) be connected to earth ground or dc common. Shielded cordsets are recommended for all quick-disconnect models.

Original Document
208830 Rev. C

5 April 2022

208830

ПРОМЭЛЕКТРОНИКА/ sales@prom-elec.com

Install the Software

Operating System
Microsoft® Windows® operating system version 10 [1]

Hard Drive Space
500 MB

Third-Party Software
.NET

USB Port
Available USB port

Important: Administrative rights are required to install the Banner Radar Configuration software.

1. Download the latest version of the software from www.bannerengineering.com/us/en/products/sensors/software/radar-configuration.html.
2. Navigate to and open the downloaded file.
3. Click **Install** to begin the installation process.
4. Depending on your system settings, a popup window may appear prompting to allow Banner Radar Configuration to make changes to your computer. Click **Yes**.
5. Click **Close** to exit the installer.

Getting Started

Power up the sensor, and verify that the power LED is ON green.

Connect to the Sensor

1. Connect the sensor to the Pro Converter Cable.
2. Connect the Pro Converter Cable to the PC.
3. Open the Banner Radar Configuration Software.
4. Go to **Sensor** > **Connect** on the **Navigation** toolbar.
   The **Connection** screen displays.
5. Select the correct **Sensor Model** and **Com Port** for the sensor.
6. Click **Connect**.
   A message displays confirming the connection to the sensor.
7. Click **OK**.
   The **Connection** screen closes and the sensor data displays.

[1] Microsoft and Windows are registered trademarks of Microsoft Corporation in the United States and/or other countries.

Specifications

Range
The sensor is able to detect a proper object (see Detectable Objects) at the following ranges, depending on the target:
9076 models: 1 m to 24 m (3.3 ft to 78.7 ft)
2450 models: 1 m to 40 m (3.3 ft to 131.2 ft)

Detectable Objects
Objects containing metal, water, or similar high-dielectric materials

Operating Principle
Frequency modulated continuous-wave (FMCW) radar

Operating Frequency
24.050-24.250 GHz, ISM Band

Maximum Output Power
ERP: 3.3 mW, 5 dBm
EIRP: 100 mW, 20 dBm

Supply Voltage (Vcc)
12 V dc to 30 V dc

Power and Current Consumption, exclusive of load
Normal Run Mode: 1.2 W, Current consumption < 50 mA at 24 V dc

Supply Protection Circuitry
Protected against reverse polarity and transient overvoltages

Delay at Power-up
< 3 seconds

Output Configuration
Bipolar NPN/PNP output
Load 1 on pin 2 (white wire) = NPN
Load 2 on pin 4 (black wire) = PNP

Output Ratings
50 mA maximum capability each output
Saturation: < 3.5 V at 50 mA
Off-state leakage current:

Outputs specifications per configuration		
PNP	Output High	≥ Vsupply - 2.5 V
	Output Low	≤ 2.5 V (loads ≤ 70 kΩ)
NPN	Output High	≥ Vsupply - 2.5 V (loads ≤ 70 kΩ)
	Output Low	≤ 2.5 V

Output Protection
Protected against short circuit conditions

Response Time
Software selectable:
50 ms ON/50 ms OFF
100 ms ON/100 ms OFF
50 ms ON/500 ms OFF
50 ms ON/1000 ms OFF

Indicators
Power LED: Green (power ON)
Signal Strength LED: Red, flashes in proportion to signal strength. Steady on at 4x excess gain. Only indicates signal amplitude, not target distance.
Output LEDs: Amber (output energized)
See Figure 1 on page 1

Construction
Housing: ABS/polycarbonate
QD Connector: Stainless steel
Mounting Threads: Stainless steel

Vibration
All models meet IEC 60947-5-2 (Vibration: 10 Hz to 55 Hz; 1 mm peak-to-peak amplitude; 5 minute duration; 30 minutes in each of the three axes at resonant frequency or at 55 Hz)

Shock
All models meet IEC 60947-5-2 (Shock: 30G peak acceleration, 11 ms pulse duration, half sine wave pulse shape)

Operating Temperature
–40 °C to +65 °C (–40 °F to +149 °F)

Environmental Rating
IP67

Connections
Integral 5-pin M12 male quick-disconnect connector. Models with a quick disconnect require a mating cordset

Certifications

IND. CONT. EQ.
E224071
LISTED
UL Environmental Rating: Type 1

Banner Engineering Europe Park Lane, Culliganlaan 2F bus 3, 1831 Diegem, BELGIUM

Turck Banner LTD Blenheim House, Blenheim Court, Wickford, Essex SS11 8YT, Great Britain

ETSI/EN 300 440
FCC ID: UE3RGAGE1XX
IC: 7044A-RGAGE1XX, Q130RA-9076-AFQ models only
for others, contact Banner Engineering
Country of Origin: USA

FCC Part 15

This device complies with Part 15 of the FCC Rules. This equipment generates, uses, and can radiate radio frequency energy and, if not installed and used in accordance with the instruction manual, may cause harmful interference to radio communications. Operation is subject to the following two conditions: 1) This device may not cause harmful interference; and 2) This device must accept any interference received, including interference that may cause undesired operation.

Industry Canada

IC: 7044A-RGAGE1XX—This device contains licence-exempt transmitters(s)/receiver(s) that comply with Innovation, Science and Economic Development Canada's licence-exempt RSS(s). Operation is subject to the following two conditions:

1. This device may not cause interference.
2. This device must accept any interference, including interference that may cause undesired operation of the device.

Cet appareil contient des émetteurs/récepteurs exemptés de licence conformes à la norme Innovation, Sciences, et Développement économique Canada. L'exploitation est autorisée aux deux conditions suivantes:

1. L'appareil ne doit pas produire de brouillage.
2. L'utilisateur de l'appareil doit accepter tout brouillage radioélectrique subi, même si le brouillage est susceptible d'en compromettre le fonctionnement.

Beam Patterns

Note: The effective beam pattern depends on the signal strength threshold and the properties of the target.

Model -2450

Typical Beam Pattern (with BRTR-CC20E Radar Target, Radar Cross Section = 50 m^2)

Left-Right Beam Pattern

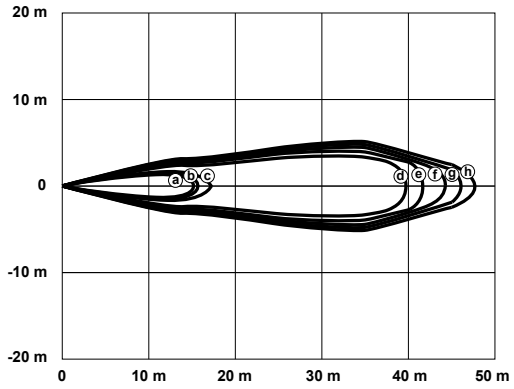

Up-Down Beam Pattern

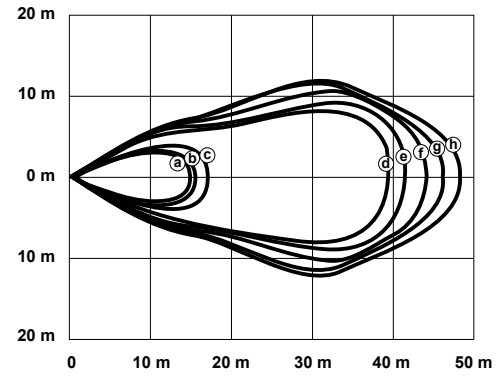

Distance

Beam Pattern	Signal Strength Threshold
a	7.50
b	6.50
c	5.00
d	2.00
e	1.50
f	1.25
g	1.13
h	1.00

Typical Beam Pattern (with 4 different targets) with Signal Strength Threshold = 1

Left-Right Beam Pattern

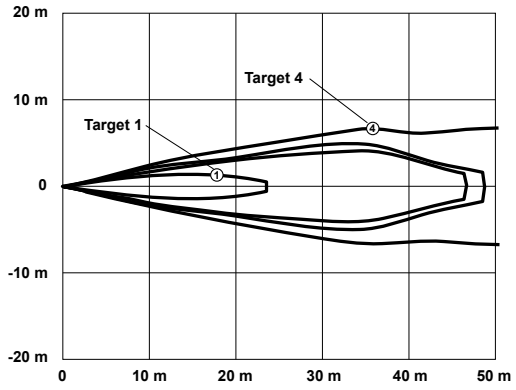

Up-Down Beam Pattern

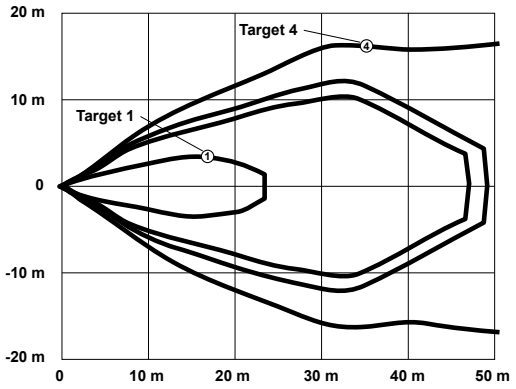

Distance

1: Weak Object (Radar cross section = 0.25 m^2)
2: Car (Radar cross section = 3 m^2)
3: Large Truck (Radar cross section = 50 m^2)
4: Passenger Train (Radar cross section = 300 m^2)

Model -9076

Typical Beam Pattern (with BRTR-CC20E Radar Target, Radar Cross Section = 50 m^2)

Left-Right Beam Pattern

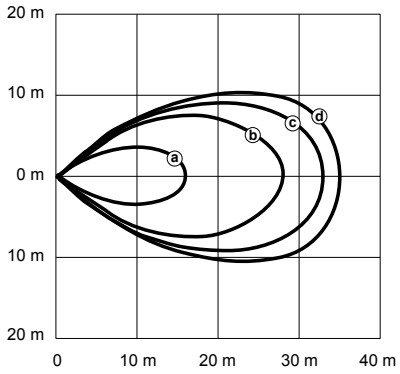

Distance

Beam Pattern	Signal Strength Threshold
a	4.50
b	1.75
c	1.25
d	1.00

Typical Beam Pattern (with 4 different targets) with Signal Strength Threshold = 1

Left-Right Beam Pattern

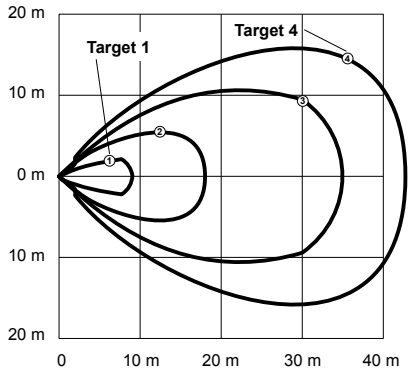

Distance

1: Weak Object (Radar cross section = 0.25 m^2)
2: Car (Radar cross section = 3 m^2)
3: Large Truck (Radar cross section = 50 m^2)
4: Passenger Train (Radar cross section = 300 m^2)

Note: Up-down beam patterns for model -9076 are slightly narrower than the left-right beam patterns and can be treated as the same for most applications.

Banner Engineering Corp. Software Copyright Notice

This software is protected by copyright, trade secret, and other intellectual property laws. You are only granted the right to use the software and only for the purposes described by Banner. Banner reserves all other rights in this software. For so long as you have obtained an authorized copy of this software directly from Banner, Banner grants you a limited, nonexclusive, nontransferable right and license to use this software.
You agree not to use, nor permit any third party to use, this software or content in a manner that violates any applicable law, regulation or terms of use under this Agreement. You agree that you will not reproduce, modify, copy, deconstruct, sell, trade or resell this software or make it available to any file-sharing or application hosting service.

Disclaimer of Warranties. Your use of this software is entirely at your own risk, except as described in this agreement. This software is provided "AS-IS." To the maximum extent permitted by applicable law, Banner, it affiliates, and its channel partners disclaim all warranties, expressed or implied, including any warranty that the software is fit for a particular purpose, title, merchantability, data loss, non-interference with or non-infringement of any intellectual property rights, or the accuracy, reliability, quality or content in or linked to the services. Banner and its affiliates and channel partners do not warrant that the services are secure, free from bugs, viruses, interruption, errors, theft or destruction. If the exclusions for implied warranties do not apply to you, any implied warranties are limited to 60 days from the date of first use of this software.

Limitation of Liability and Indemnity. Banner, its affiliates and channel partners are not liable for indirect, special, incidental, punitive or consequential damages, damages relating to corruption, security, loss or theft of data, viruses, spyware, loss of business, revenue, profits, or investment, or use of software or hardware that does not meet Banner minimum systems requirements. The above limitations apply even if Banner and its affiliates and channel partners have been advised of the possibility of such damages. This Agreement sets forth the entire liability of Banner, its affiliates and your exclusive remedy with respect to the software use. You agree to indemnify and hold Banner and its affiliates and channel partners harmless from any and all claims, liability and expenses, including reasonable attorney's fees and costs, arising out of your use of the Services or breach of this Agreement (collectively referred to as "Claims"). Banner reserves the right at its sole discretion and at its own expense, to assume the exclusive defense and control of any Claims. You agree to reasonably cooperate as requested by Banner in defense of any Claims.

Banner Engineering Corp. Limited Warranty

Banner Engineering Corp. warrants its products to be free from defects in material and workmanship for one year following the date of shipment. Banner Engineering Corp. will repair or replace, free of charge, any product of its manufacture which, at the time it is returned to the factory, is found to have been defective during the warranty period. This warranty does not cover damage or liability for misuse, abuse, or the improper application or installation of the Banner product.

THIS LIMITED WARRANTY IS EXCLUSIVE AND IN LIEU OF ALL OTHER WARRANTIES WHETHER EXPRESS OR IMPLIED (INCLUDING, WITHOUT LIMITATION, ANY WARRANTY OF MERCHANTABILITY OR FITNESS FOR A PARTICULAR PURPOSE), AND WHETHER ARISING UNDER COURSE OF PERFORMANCE, COURSE OF DEALING OR TRADE USAGE.

This Warranty is exclusive and limited to repair or, at the discretion of Banner Engineering Corp., replacement. **IN NO EVENT SHALL BANNER ENGINEERING CORP. BE LIABLE TO BUYER OR ANY OTHER PERSON OR ENTITY FOR ANY EXTRA COSTS, EXPENSES, LOSSES, LOSS OF PROFITS, OR ANY INCIDENTAL, CONSEQUENTIAL OR SPECIAL DAMAGES RESULTING FROM ANY PRODUCT DEFECT OR FROM THE USE OR INABILITY TO USE THE PRODUCT, WHETHER ARISING IN CONTRACT OR WARRANTY, STATUTE, TORT, STRICT LIABILITY, NEGLIGENCE, OR OTHERWISE.**

Banner Engineering Corp. reserves the right to change, modify or improve the design of the product without assuming any obligations or liabilities relating to any product previously manufactured by Banner Engineering Corp. Any misuse, abuse, or improper application or installation of this product or use of the product for personal protection applications when the product is identified as not intended for such purposes will void the product warranty. Any modifications to this product without prior express approval by Banner Engineering Corp will void the product warranties. All specifications published in this document are subject to change; Banner reserves the right to modify product specifications or update documentation at any time. Specifications and product information in English supersede that which is provided in any other language. For the most recent version of any documentation, refer to: www.bannerengineering.com.

For patent information, see www.bannerengineering.com/patents.

© Banner Engineering Corp. All rights reserved