# EZ-SCREEN Type 2 Safety Light Curtain Product Manual

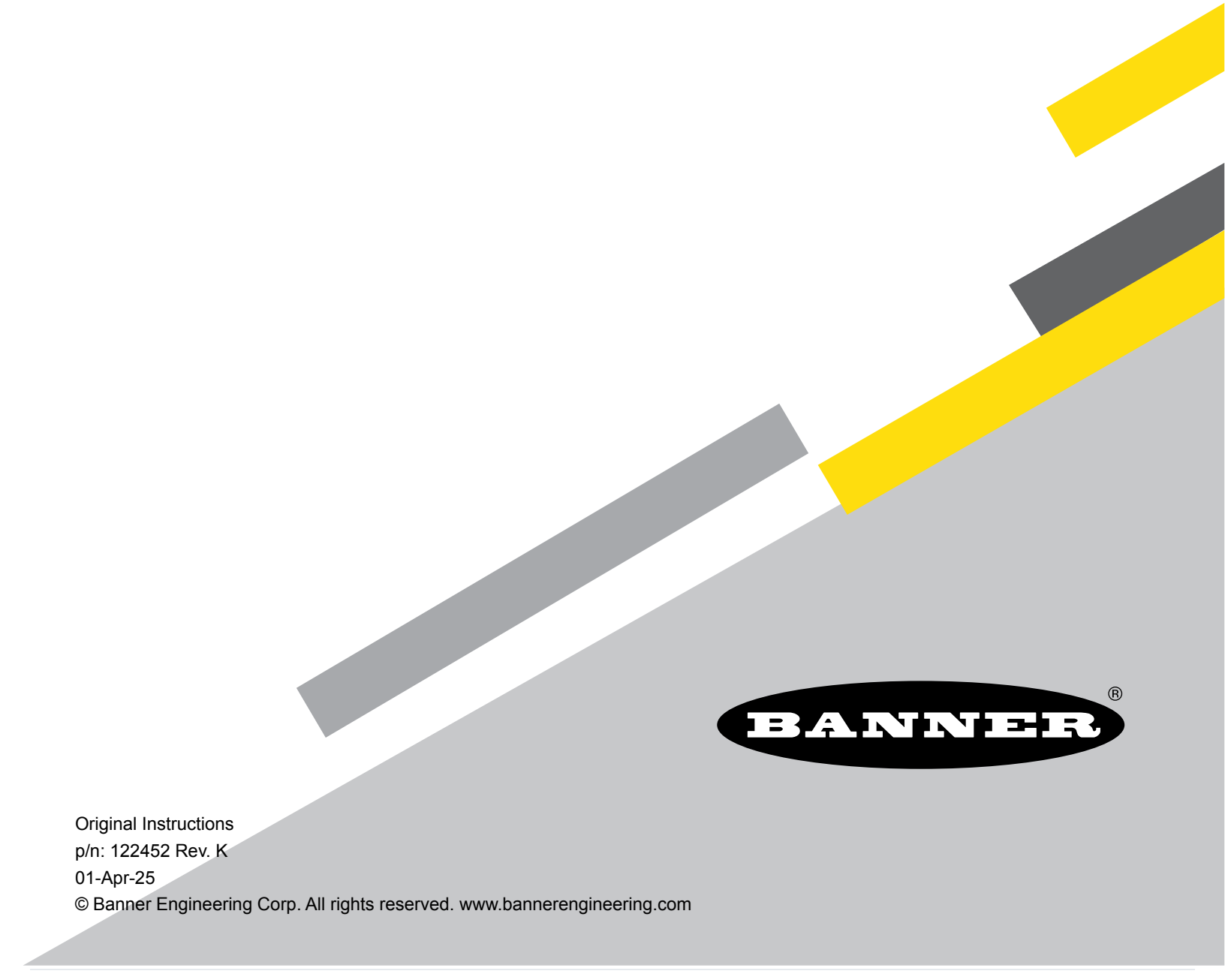

Original Instructions
p/n: 122452 Rev. K
01-Apr-25
© Banner Engineering Corp. All rights reserved. www.bannerengineering.com

ПРОМЭЛЕКТРОНИКА/ sales@prom-elec.com

# Contents


## Chapter 1 About This Document ..... 4
1.1 Important... Read This Before Proceeding! ..... 4
1.2 Use of Warnings and Cautions ..... 4
1.3 EU/UK Declaration of Conformity (DoC) ..... 5

## Chapter 2 Standards and Regulations ..... 6
2.1 Applicable US Standards ..... 6
2.2 OSHA Regulations ..... 7
2.3 International/European Standards ..... 7

## Chapter 3 Introduction ..... 8
3.1 Features ..... 8
3.2 System Description ..... 8
3.3 Models ..... 9
3.4 Appropriate Applications and Limitations ..... 10
3.4.1 Examples: Appropriate Applications ..... 11
3.4.2 Examples: Inappropriate Applications ..... 11
3.5 Specifications ..... 11
3.5.1 General Specifications ..... 11
3.5.2 Emitter Specifications ..... 12
3.5.3 Receiver Specifications ..... 12
3.5.4 Dimensions ..... 13
3.5.5 Bracket Dimensions ..... 13
3.6 Control Reliability and Safety Categories ..... 15
3.7 Operating Features ..... 16
3.7.1 Automatic/Manual Reset Output ..... 16
3.7.2 Wiring Options for Emitter/Receiver Swapability ..... 16
3.7.3 Manual Start/Restart/Remote Test Input and EDM ..... 17
3.7.4 Status Indicators ..... 18

## Chapter 4 Mechanical Installation ..... 19
4.1 Mechanical Installation Considerations ..... 19
4.1.1 Calculating the Safety Distance (Minimum Distance) ..... 19
4.1.2 Reducing or Eliminating Pass-Through Hazards ..... 22
4.1.3 Supplemental Safeguarding ..... 22
4.1.4 Other Considerations ..... 23
4.2 Mounting Hardware ..... 29
4.2.1 Using Center Mounting Brackets ..... 29
4.2.2 Mounting and Initial Alignment of Emitter/Receiver Pairs ..... 30

## Chapter 5 Electrical Installation and Testing ..... 33
5.1 Routing Cordsets ..... 33
5.2 Initial Electrical Connections ..... 34
5.2.1 Sensor Interchangeability ..... 35
5.3 Initial Checkout Procedure ..... 35
5.3.1 Configuring the System for Initial Checkout ..... 36
5.3.2 Initial Power-Up ..... 36
5.3.3 Optical Alignment ..... 37
5.3.4 Optical Alignment Procedure with Mirrors ..... 38
5.3.5 Conduct a Trip Test ..... 39
5.4 Electrical Connections to the Guarded Machine ..... 40
5.4.1 OSSD Output Connections ..... 41
5.4.2 Final Switching Devices (FSD) Interfacing Connections ..... 41
5.4.3 Machine Primary Control Elements and EDM Input ..... 42
5.4.4 Manual Reset/Remote Test Input and EDM ..... 42
5.4.5 Preparing for System Operation ..... 43
5.5 Wiring Diagrams ..... 44
5.5.1 Generic Emitter Wiring Diagram ..... 44
5.5.2 Generic Wiring to FSDs (manual reset) ..... 45
5.5.3 Generic Wiring — Interface Module (2-Channel EDM, Manual Reset) ..... 46

## Chapter 6 System Operation ..... 47
6.1 Security Protocol ..... 47
6.2 Reset Procedures ..... 47


© Banner Engineering Corp. All rights reserved. www.bannerengineering.com

6.2.1 Resetting the Receiver ..... 47
6.2.2 Resetting the Emitter ..... 47
6.3 Status Indicators ..... 48
6.3.1 Receiver Status Indicators ..... 48
6.3.2 Receiver Alignment Indicators ..... 48
6.3.3 Emitter Indicators ..... 48
6.4 Normal Operation ..... 49
6.4.1 System Power-Up ..... 49
6.4.2 Run Mode ..... 49
6.4.3 Manual Reset Procedure ..... 49

**Chapter 7 Checkout Procedures ..... 50**
7.1 Schedule of Checkouts ..... 50
7.2 Commissioning Checkout ..... 50

**Chapter 8 Troubleshooting ..... 53**
8.1 Troubleshooting and Lockout Conditions ..... 53
8.2 Receiver (System Reset) ..... 53
8.3 Emitter Reset ..... 53
8.4 Electrical and Optical Noise ..... 54
8.4.1 Check for Sources of Electrical Noise ..... 54
8.4.2 Check for Optical Noise Sources ..... 55

**Chapter 9 Accessories ..... 56**
9.1 Cordsets ..... 56
9.1.1 Single-Ended (Machine Interface) Cordsets ..... 56
9.1.2 Double-Ended Cables ..... 56
9.1.3 Bulkhead Connector ..... 57
9.1.4 Splitter Cordsets ..... 57
9.2 Interface Modules ..... 58
9.3 Contactors ..... 59
9.4 Safety Controllers ..... 59
9.5 Lens Shield ..... 59
9.6 EZ-LIGHT for EZ-SCREEN ..... 59
9.7 MSA Series Stands ..... 60
9.8 SSM Series Corner Mirrors ..... 60
9.9 Accessory Mounting Brackets ..... 61
9.10 Alignment Aids ..... 62

**Chapter 10 Product Support and Maintenance ..... 63**
10.1 Clean Components with Mild Detergent ..... 63
10.2 Warranty Service ..... 63
10.3 EZS Type 2 Replacement Parts ..... 63
10.4 Disposal ..... 63
10.5 Manufacturing Date ..... 63
10.6 Documentation ..... 64
10.7 Contact Us ..... 64
10.8 Banner Engineering Corp Limited Warranty ..... 64

**Index ..... 65**

**Glossary ..... 67**

© Banner Engineering Corp. All rights reserved. www.bannerengineering.com

Chapter Contents

1.1 Important... Read This Before Proceeding! ..... 4
1.2 Use of Warnings and Cautions ..... 4
1.3 EU/UK Declaration of Conformity (DoC) ..... 5

# Chapter 1 About This Document

## 1.1 Important... Read This Before Proceeding!

It is the responsibility of the machine designer, controls engineer, machine builder, machine operator, and/or maintenance personnel or electrician to apply and maintain this device in full compliance with all applicable regulations and standards. The device can provide the required safeguarding function only if it is properly installed, properly operated, and properly maintained. This manual attempts to provide complete installation, operation, and maintenance instructions. *Reading the manual in its entirety is highly recommended to ensure proper understanding of the operation, installation, and maintenance.* Please direct any questions regarding the application or use of the device to Banner Engineering Corp..

For more information regarding U.S. and international institutions that provide safeguarding application and safeguarding device performance standards, see "Standards and Regulations" on page 6.

**WARNING:**

- The user is responsible for following these instructions.
- **Failure to follow any of these responsibilities may potentially create a dangerous condition that could result in serious injury or death.**
- Carefully read, understand, and comply with all instructions for this device.
- Perform a risk assessment that includes the specific machine guarding application. Guidance on a compliant methodology can be found in ISO 12100 or ANSI B11.0.
- Determine what safeguarding devices and methods are appropriate per the results of the risk assessment and implement per all applicable local, state, and national codes and regulations. See ISO 13849-1, ANSI B11.19, and/or other appropriate standards.
- Verify that the entire safeguarding system (including input devices, control systems, and output devices) is properly configured and installed, operational, and working as intended for the application.
- Periodically re-verify, as needed, that the entire safeguarding system is working as intended for the application.

## 1.2 Use of Warnings and Cautions

The precautions and statements used throughout this document are indicated by alert symbols and must be followed for the safe use of the EZ-SCREEN Type 2 Safety Light Curtain. Failure to follow all precautions and alerts may result in unsafe use or operation. The following signal words and alert symbols are defined as follows:

| Signal Word and Symbol | Definition |
|---|---|
| **WARNING**: | **Warnings** refer to potentially hazardous situations which, if not avoided, could result in serious injury or death. |
| **CAUTION**: | **Cautions** refer to potentially hazardous situations which, if not avoided, could result in minor or moderate injury. |


© Banner Engineering Corp. All rights reserved.
www.bannerengineering.com

These statements are intended to inform the machine designer and manufacturer, the end user, and maintenance personnel, how to avoid misapplication and effectively apply the EZ-SCREEN Type 2 Safety Light Curtain to meet the various safeguarding application requirements. These individuals are responsible to read and abide by these statements.

## 1.3 EU/UK Declaration of Conformity (DoC)

Banner Engineering Corp. herewith declares that these products are in conformity with the provisions of the listed directives and all essential health and safety requirements have been met. For the complete DoC, please go to www.bannerengineering.com.

| Product | Directive |
|---|---|
| EZ-SCREEN Type 2 Safety Light Curtain | EU: Machinery Directive 2006/42/EC |
| | UKCA: Machinery (Safety) Regulation 2008 |

Representative in EU: Spiros Lachandidis, Managing Director, **Banner Engineering BV** Park Lane | Culliganlaan 2F bus 3 | 1831 Diegem, BELGIUM

Representative in UK: Tony Coghlan, Managing Director, **Turck Banner LTD** Blenheim House | Blenheim Court | Wickford, Essex SS11 8YT | Great Britain


© Banner Engineering Corp. All rights reserved.
www.bannerengineering.com

Chapter Contents

2.1 Applicable US Standards ..... 6
2.2 OSHA Regulations ..... 7
2.3 International/European Standards ..... 7

# Chapter 2 Standards and Regulations

*The list of standards below is included as a convenience for users of this Banner device. Inclusion of the standards below does not imply that the device complies specifically with any standard, other than those specified in the Specifications section of this manual.*

## 2.1 Applicable US Standards

ANSI B11.0 Safety of Machinery

ANSI B11.1 Mechanical Power Presses

ANSI B11.2 Hydraulic Power Presses

ANSI B11.3 Power Press Brakes

ANSI B11.4 Shears

ANSI B11.5 Iron Workers

ANSI B11.6 Lathes

ANSI B11.7 Cold Headers and Cold Formers

ANSI B11.8 Drilling, Milling, and Boring

ANSI B11.9 Grinding Machines

ANSI B11.10 Metal Sawing Machines

ANSI B11.11 Gear Cutting Machines

ANSI B11.12 Roll Forming and Roll Bending Machines

ANSI B11.13 Single- and Multiple-Spindle Automatic Bar and Chucking Machines

ANSI B11.14 Coil Slitting Machines

ANSI B11.15 Pipe, Tube, and Shape Bending Machines

ANSI B11.16 Metal Powder Compacting Presses

ANSI B11.17 Horizontal Extrusion Presses

ANSI B11.18 Machinery and Machine Systems for the Processing of Coiled Strip, Sheet, and Plate

ANSI B11.19 Performance Requirements for Risk Reduction Measures: Safeguarding and Other Means of Reducing Risk

ANSI B11.20 Manufacturing Systems

ANSI B11.21 Machine Tools Using Lasers

ANSI B11.22 Numerically Controlled Turning Machines

ANSI B11.23 Machining Centers

ANSI B11.24 Transfer Machines

ANSI/RIA R15.06 Safety Requirements for Industrial Robots and Robot Systems


© Banner Engineering Corp. All rights reserved.

NFPA 79 Electrical Standard for Industrial Machinery

ANSI/PMMI B155.1 Package Machinery and Packaging-Related Converting Machinery — Safety Requirements

## 2.2 OSHA Regulations

OSHA Documents listed are part of: Code of Federal Regulations Title 29, Parts 1900 to 1910

OSHA 29 CFR 1910.212 General Requirements for (Guarding of) All Machines

OSHA 29 CFR 1910.147 The Control of Hazardous Energy (lockout/tagout)

OSHA 29 CFR 1910.217 (Guarding of) Mechanical Power Presses

## 2.3 International/European Standards

ISO 12100 Safety of Machinery – General Principles for Design – Risk Assessment and Risk Reduction

ISO 13857 Safety of Machinery – Safety Distances to Prevent Hazard Zones Being Reached

ISO 13850 (EN 418) Emergency Stop Devices, Functional Aspects – Principles for Design

ISO 13851 Two-Hand Control Devices – Principles for Design and Selection

IEC 62061 Safety of Machinery – Functional Safety of Safety-Related Control Systems

ISO 13849-1 Safety of Machinery – Safety-Related Parts of Control Systems – Part 1: General Principles for Design

EN 13855 (EN 999) The Positioning of Protective Equipment in Respect to Approach Speeds of Parts of the Human Body

ISO 14119 (EN 1088) Interlocking Devices Associated with Guards – Principles for Design and Selection

EN 60204-1 Electrical Equipment of Machines Part 1: General Requirements

IEC 61496 Electro-sensitive Protection Equipment

IEC 60529 Degrees of Protection Provided by Enclosures

IEC 60947-1 Low Voltage Switchgear – General Rules

IEC 60947-5-1 Low Voltage Switchgear – Electromechanical Control Circuit Devices

IEC 60947-5-5 Low Voltage Switchgear – Electrical Emergency Stop Device with Mechanical Latching Function

IEC 61508 Functional Safety of Electrical/Electronic/Programmable Electronic Safety-Related Systems

IEC 62046 Safety of Machinery – Applications of Protective Equipment to Detect the Presence of Persons

ISO 3691-4 Industrial Trucks – Safety Requirements and Verification, Part 4 Driverless Industrial trucks and their Systems


© Banner Engineering Corp. All rights reserved.

Chapter Contents

3.1 Features ..... 8
3.2 System Description ..... 8
3.3 Models ..... 9
3.4 Appropriate Applications and Limitations ..... 10
3.5 Specifications ..... 11
3.6 Control Reliability and Safety Categories ..... 15
3.7 Operating Features ..... 16

# Chapter 3 Introduction

## 3.1 Features

- An optoelectronic safeguarding device
- Creates a screen of synchronized, modulated infrared sensing beams; choose from 10 sizes, in 150 mm (6 in) increments and defined areas from 150 mm to 1.5 m (6 in to 59 in)
- Compact package for smaller production machines
- Models available with automatic (trip) or manual start/restart (latch) output operation
- 30 mm (1.18 in) resolution
- Remote Test input terminals for simulating a "blocked" condition
- Operating range up to 15 m (50 ft)
- Type 2 per IEC 61496-1/-2; Category 2 PLc per EN ISO 13849-1
- FMEA tested according to IEC 61496-1, Type 2 requirements
- Receiver LEDs provide system status and emitter/receiver alignment indications
- Highly immune to EMI, RFI, ambient light, weld flash, and strobe light
- Two-piece design
- Vibration-tolerant, factory burned-in emitter and receiver circuitry for toughness and dependability




## 3.2 System Description

**NOTE:** This manual refers to an emitter and its receiver, and their cabling as "a System".

Banner EZ-SCREEN Type 2 emitters and receivers provide a redundant, microprocessor-controlled, opposed-mode optoelectronic "curtain of light", or "light screen". EZ-SCREEN Type 2 typically is used for point-of-operation guarding and is suited to safeguard a variety of lower-risk machinery.

The EZ-SCREEN Type 2 is a two-piece (two-box) system comprising an emitter and a receiver, but no external controller. The external device monitoring (EDM) function ensures the fault detection capability required by EN ISO 13849-1 Category 2.

The EZ-SCREEN Type 2 emitters have a row of synchronized modulated infrared (invisible) light-emitting diodes (LEDs) in a compact metal housing. Receivers have a corresponding row of synchronized photodetectors. The light screen created by the emitter and receiver is called the defined area; its width and height are determined by the length of the sensor pair and the distance between them. The maximum range is 15 m (50 ft), which decreases if corner mirrors are used. Resolution is 30 mm (1.18 in).

Both the emitter and receiver feature LEDs to provide a continuous indication of the System's operating status, alignment, and error conditions.

In typical operation, if any part of an operator's body (or any opaque object) of more than a pre-determined cross-section is detected, the solid-state output signal switching device (OSSD) safety outputs turn OFF. These safety outputs are connected to the guarded machine's final switching device (FSDs) that controls the machine primary control element (MPCEs), which immediately stops the motion of the guarded machine.

Both OSSD outputs must be connected to the machine control so that the machine's safety-related control system interrupts the circuit or power to the MPCEs (Machine Primary Control Elements), resulting in a non-hazardous condition. Each OSSD is capable of sourcing 0.5A at +24 V DC.


© Banner Engineering Corp. All rights reserved.
www.bannerengineering.com

EZ-SCREEN Type 2 is extensively failure mode and effects analysis (FMEA) tested to IEC 61496-1/-2 requirements. The design of the EZ-SCREEN Type 2 has considered all single faults such that a loss of a critical safety function will result in a stop command and a lockout condition. In the event of an accumulation of undetected faults, a remote external test (or check) is required to maintain the safety function.

*Figure 1. Banner EZ-SCREEN Type 2: emitter, receiver, and two interconnecting cables*

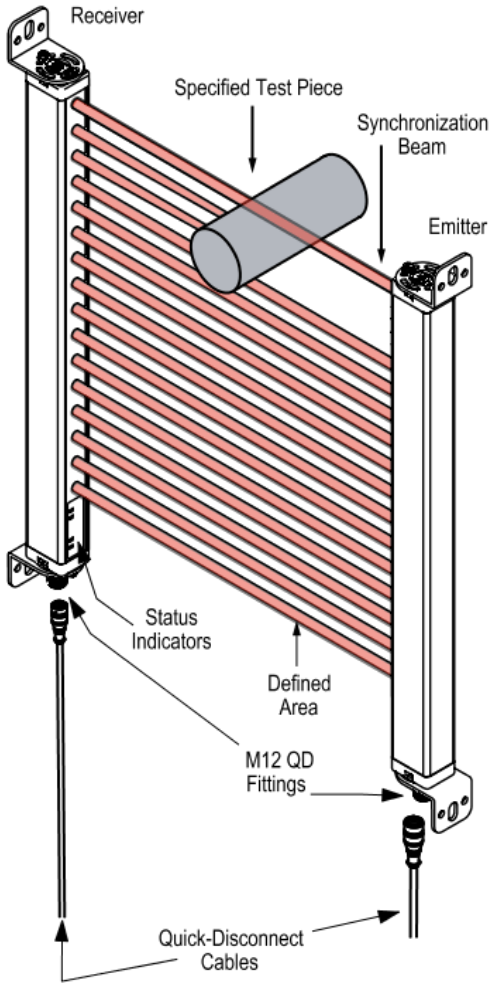


Electrical connections are made through M12 quick-disconnect connectors. An optional connection that provides sensor interchangeability (or “swapability”) – the ability to install either sensor at either QD connection – is possible. Using a parallel connection (color-for-color), the emitter cable can be connected to the receiver cable, providing the ability to swap the emitter and receiver position. This connection option provides advantages during installation, wiring, and troubleshooting.

All models require a supply voltage of +24 V DC ±15%.

## 3.3 Models

| Models (see note below) | Defined Area Height | Number of Beams | Response Time (Tr) |
|---|---|---|---|
| **LS2..30-150Q8** | 150 mm (5.9 in) | 8 | 11 ms |
| **LS2..30-300Q8** | 300 mm (11.8 in) | 16 | 13 ms |
| **LS2..30-450Q8** | 450 mm (17.7 in) | 24 | 14 ms |
| **LS2..30-600Q8** | 600 mm (23.6 in) | 32 | 16 ms |
| **LS2..30-750Q8** | 750 mm (29.5 in) | 40 | 17 ms |
| **LS2..30-900Q8** | 900 mm (35.4 in) | 48 | 19 ms |
| **LS2..30-1050Q8** | 1050 mm (41.3 in) | 56 | 21 ms |

Continued on page 10


© Banner Engineering Corp. All rights reserved.
www.bannerengineering.com

Continued from page 9

| Models (see note below) | Defined Area Height | Number of Beams | Response Time (Tr) |
|---|---|---|---|
| **LS2..30-1200Q8** | 1200 mm (47.2 in) | 64 | 22 ms |
| **LS2..30-1350Q8** | 1350 mm (53.1 in) | 72 | 24 ms |
| **LS2..30-1500Q8** | 1500 mm (59 in) | 80 | 25 ms |

**NOTE:** The **..** in the model numbers is one of the following:
- **E** = Emitter
- **TR** = Automatic reset (Trip) Output Receiver
- **LR** = Manual start/restart (Latch) Output Receiver
- **TP** = Automatic reset (Trip) Output Emitter/Receiver Pair
- **LP** = Manual start/restart (Latch) Output Emitter/Receiver Pair

Pair model numbers end in **88** (for example, **LS2TP30-150Q88**) to indicate that both the transmitter and receiver have an 8-pin connector.

## 3.4 Appropriate Applications and Limitations

**WARNING:**
- **Read this Section Carefully Before Installing the System**
- **Failure to follow these instructions could result in serious injury or death.**
- If all mounting, installation, interfacing, and checkout procedures are not followed properly, this Banner Engineering Corp. device cannot provide the protection for which it was designed.
- The user is responsible for ensuring that all local, state, and national laws, rules, codes, or regulations relating to the installation and use of this control system in any particular application are satisfied. Ensure that all legal requirements have been met and that all technical installation and maintenance instructions contained in this manual are followed.
- The user has the sole responsibility to ensure that this Banner Engineering Corp. device is installed and interfaced to the guarded machine by Qualified Persons, in accordance with this manual and applicable safety regulations. A Qualified person is a person who, by possession of a recognized degree or certificate of professional training, or who, by extensive knowledge, training and experience, has successfully demonstrated the ability to solve problems relating to the subject matter and work.

The Banner EZ-SCREEN Type 2 is intended for lower-risk machine guarding and other safeguarding applications, as determined by a risk assessment. It is the user's responsibility to verify whether the safeguarding is appropriate for the application and is installed, as instructed by this manual, by a Qualified Person.

The EZ-SCREEN Type 2 ability to perform its safeguarding function depends upon the appropriateness of the application and upon its proper mechanical and electrical installation and interfacing to the guarded machine. **If all mounting, installation, interfacing, and checkout procedures are not followed properly, the EZ-SCREEN Type 2 cannot provide the protection for which it was designed**.

**WARNING:**
- **Install System Only on Appropriate Applications**
- Failure to follow these instructions could result in serious injury or death.
- Use Banner's EZ-SCREEN Type 2 only on machinery that can be stopped immediately after a stop signal is issued at any point in the machine's stroke or cycle, such as part-revolution clutched machines. Under no circumstances may the EZ-SCREEN Type 2 be used on full-revolution clutched machinery or in unsuitable applications.
- If there is any doubt about whether or not your machinery is compatible with the EZ-SCREEN Type 2, contact Banner Engineering.


© Banner Engineering Corp. All rights reserved.
www.bannerengineering.com

**WARNING:**

- **Use of EZ-SCREEN Type 2**
- Failure to follow these instructions could result in serious bodily injury or death.
- EZ-SCREEN Type 2 meets the Type 2 requirements of IEC 61496 and Category 2 PLc requirements of EN ISO 13849-1. DO NOT use EZ-SCREEN Type 2 unless it is installed, tested, and inspected in accordance with this manual. DO NOT use EZ-SCREEN Type 2 where Control Reliability is required, or where Category 3, Category 4, or Type 4 AOPD (active opto-electronic protective device) have been mandated, or where a risk assessment has determined that frequent access by personnel to the hazard could result in an irreversible or serious injury (for example, OSHA reportable injury).
- Typical use is for safeguarding in situations where the consequence of an accident will result in only slight (normally reversible) injuries that are typically treated by the normal healing processes and minor medical treatment (that is, first aid, as defined by OSHA 29CFR1904.7).

### 3.4.1 Examples: Appropriate Applications

EZ-SCREEN Type 2 are typically used for, but is not limited to, the following applications (dependent on machine risk assessment):

- Small assembly equipment
- Automated production equipment
- "Table-top" robotic work cells
- Component insertion/"pick-and-place" machines
- Small packaging machines
- Equipment and process protection (non-personnel safety)
- Applications that could result in only slight (normally reversible) injuries (such as bump, bruise, knock-down, trapping but not crushing, minor cuts and abrasions, etc.)

### 3.4.2 Examples: Inappropriate Applications

Do not use EZ-SCREEN Type 2 in the following applications:

- As a primary safeguard in frequently accessed hazardous situations that could result in serious injuries (normally irreversible, including death)
- In any case where Control Reliability, Category 3, Category 4, PL d, PL e, or Type 4 AOPD (active opto-electronic protective device) have been mandated. See EN ISO 13849-1, IEC 61496-1, or other appropriate standard
- With any machine that cannot be stopped immediately after a stop signal is issued, such as single-stroke (or full-revolution) clutched machinery
- With any machine with inadequate or inconsistent machine response time and stopping performance
- With any machine that ejects materials or component parts through the defined area
- In any environment that is likely to adversely affect photoelectric sensing efficiency. For example, corrosive chemicals or fluids or unusually severe levels of smoke or dust, if not controlled, may degrade sensing efficiency
- As a tripping device to initiate or reinitiate machine motion (PSDI applications), unless the machine and its control system fully comply with the relevant standard or regulation (see OSHA 29CFR1910.217, NFPA 79, ANSI B11.19, ISO 12100, IEC 60204-1, IEC 61496-1, or other appropriate standard)

If an EZ-SCREEN Type 2 is installed for use as a perimeter guard (where a pass-through hazard may exist, see "Reducing or Eliminating Pass-Through Hazards" on page 22), the dangerous machine motion can be initiated by normal means only after the safeguarded area is clear of individuals and the EZ-SCREEN Type 2 has been manually reset.

## 3.5 Specifications

### 3.5.1 General Specifications

**Short Circuit Protection**
All inputs and outputs are protected from short circuits to +24 V DC or DC common

**Electrical Safety Class**
III (per IEC 61140: 1997)

**Safety Rating**
Type 2 per IEC 61496-1, -2
Category 2 PL c per EN ISO13849-1


© Banner Engineering Corp. All rights reserved.
www.bannerengineering.com

| | 8 Beams | 80 Beams |
|---|---|---|
| $MTTF_d$ (EN ISO 13849-1) | 282.4 years | 52.3 years |
| Mission Time, Tm | 20 years | |

**Operating Range**
0.2 to 15 m (8 in. to 50 ft) — Range decreases with use of mirrors and/or lens shields:
- Lens shields — approx 10% less range per shield
- Glass-surface mirrors — approx 8% less range per mirror

See the specific mirror datasheet for more information.

**Resolution**
30 mm

**Effective Aperture Angle (EAA)**
Meets Type 2 requirements per IEC 61496-2; ±5° at 3 m

**Ambient Light Immunity**
> 10,000 lux at 5° angle of incidence

**Strobe Light Immunity**
Immune as per IEC 61496-2

**Response Time**
Dependent on number of beams (see "EZS Type 2 Models With Response Times" on page 9)

## 3.5.2 Emitter Specifications

**Supply Voltage at the Device**
24 V DC ±15% (use a PELV-rated power supply according to EN IEC 60950). The external voltage supply must be capable of buffering brief mains interruptions of 20 ms, as specified in IEC/EN 60204-1.

## 3.5.3 Receiver Specifications

**Supply Voltage at the Device**
24 V DC ±15% (use a PELV-rated power supply according to EN IEC 60950).The external voltage supply must be capable of buffering brief mains interruptions of 20 ms, as specified in IEC/EN 60204-1.

**Supply Current (no load)**
90 mA maximum, exclusive of OSSD1 and OSSD2 loads (up to an additional 0.5 A each)

**EDM Input**
Power monitoring accomplished via Reset/Remote Test input

**Reset Input/Remote Test Input**
Connect to +24 V DC via a normally closed (N.C.) reset switch

Auto Reset (Trip Output) Models: Test/Reset

Manual Reset (Latch Output) Models: Test/Restart/Reset

**Enclosure**
Extruded aluminum housing with yellow polyester powder finish standard and well-sealed, rugged polycarbonate end caps, acrylic lens cover

**Environmental Rating**
IP65

**Environmental Conditions**
Operating temperature:0 °C to +55 °C (+32 °F to +131 °F)

Storage temperature: –30 °C to +65 °C (–22 °F to +149 °F)

95% maximum relative humidity (non-condensing)

**Shock and Vibration**
Components have passed vibration and shock tests according to IEC 61496-1 (Class 3M4). This includes vibration (30 cycles) of 5 Hz to 150 Hz at 3.5 mm (0.14 in) amplitude and 1 g acceleration, and shock of 15 g for 6 milliseconds (600 cycles).

**PFHd**
$2.12 \times 10^{-7}$ for SIL2

**Certifications**
Banner Engineering BV
Park Lane, Culliganlaan 2F bus 3
1831 Diegem, BELGIUM

**Supply Current**
50 mA maximum

**Wavelength of Emitter Elements**
Infrared LEDs, 850 nm at peak emission

**Output Signal Switching Devices (OSSDs)**
Two redundant solid-state 24 V DC, 0.5 A maximum sourcing OSSD (Output Signal Switching Device) safety outputs. (Use optional interface modules for AC or larger DC loads.)

ON-State voltage: ≥ Vin-1.5 V DC

OFF-State voltage: 0 V DC typical, 0.5 V DC maximum (no load)

Maximum load capacitance: 100 nF

Maximum cable resistance to load: 5 ohms per wire

Open ground leakage current: 0.65 mA maximum

OSSD test pulse width: 200 to 250 microseconds typical

OSSD test pulse period: 260 ms typical

**Status Indicators**
See "Status Indicators" on page 48 and "Emitter Reset" on page 53

Emitter: Green LED, Power ON

Receiver: Two yellow alignment indicators (top and bottom), two status indicators (blocked and clear)


© Banner Engineering Corp. All rights reserved.
www.bannerengineering.com

## 3.5.4 Dimensions

*Figure 2. Dimensions*

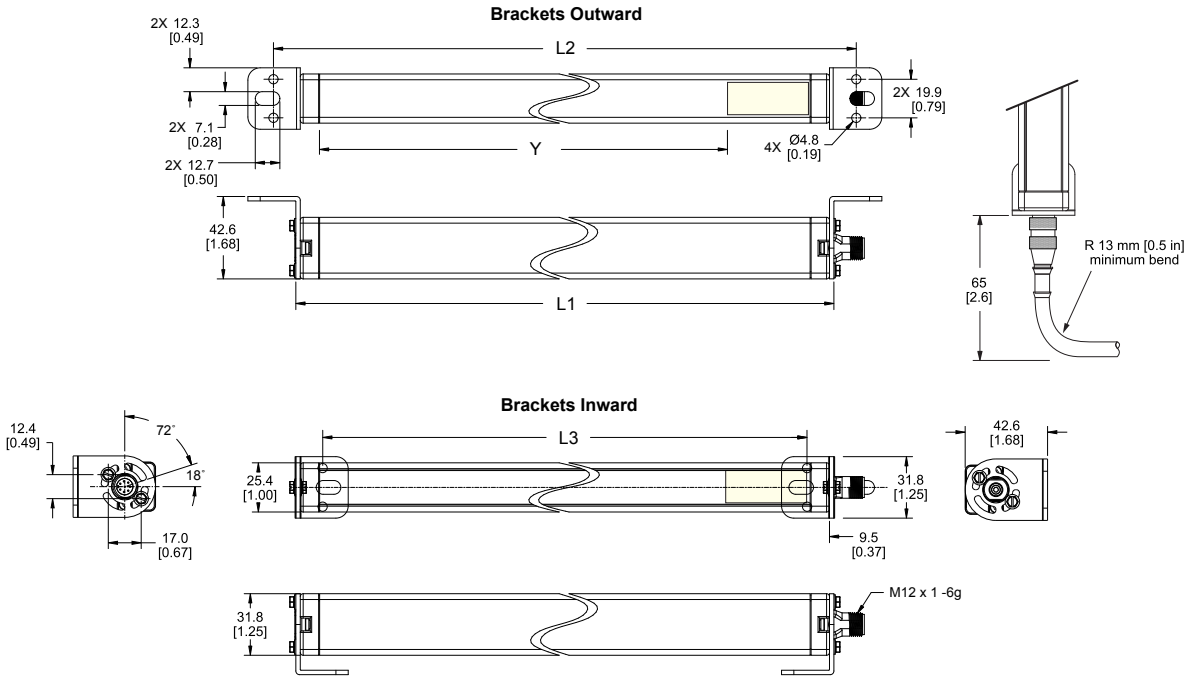


| Emitter or Receiver Model | L1 | L2 | L3 | Defined Area[(1)]Y |
|---|---|---|---|---|
| **LS2..-150** | 215 mm (8.5 in) | 249 mm (9.8 in) | 186 mm (7.3 in) | 150 mm (5.9 in) |
| **LS2..-300** | 365 mm (14.4 in) | 349 mm (13.7 in) | 336 mm (13.2 in) | 300 mm (11.8 in) |
| **LS2..-450** | 515 mm (20.3 in) | 549 mm (21.6 in) | 486 mm (19.1 in) | 450 mm (17.7 in) |
| **LS2..-600** | 665 mm (26.2 in) | 699 mm (27.5 in) | 636 mm (25.0 in) | 600 mm (23.6 in) |
| **LS2..-750** | 815 mm (32.1 in) | 849 mm (33.4 in) | 786 mm (30.9 in) | 750 mm (29.5 in) |
| **LS2..-900** | 964 mm (38.0 in) | 998 mm (39.3 in) | 935 mm (36.8 in) | 900 mm (35.4 in) |
| **LS2..-1050** | 1114 mm (43.9 in) | 1148 mm (45.2 in) | 1085 mm (42.7 in) | 1050 mm (41.3 in) |
| **LS2..-1200** | 1264 mm (49.8 in) | 1298 mm (51.1 in) | 1235 mm (48.6 in) | 1200 mm (47.2 in) |
| **LS2..-1350** | 1414 mm (55.7 in) | 1448 mm (57.0 in) | 1385 mm (54.6 in) | 1350 mm (53.1 in) |
| **LS2..-1500** | 1563 mm (61.5 in) | 1597 mm (62.9 in) | 1534 mm (60.4 in) | 1500 mm (59.1 in) |

## 3.5.5 Bracket Dimensions

The following are end cap and center bracket dimensions for brackets supplied with each EZ-SCREEN Type 2 emitter or receiver. All brackets have a thickness of 2.3 mm, and are black zinc plated with a chromate dip finish. Bracket mounting hardware is included.

(1) Normal measurement


© Banner Engineering Corp. All rights reserved.
www.bannerengineering.com

## Standard End Cap Brackets

*Figure 3. USMB-10 Bracket*

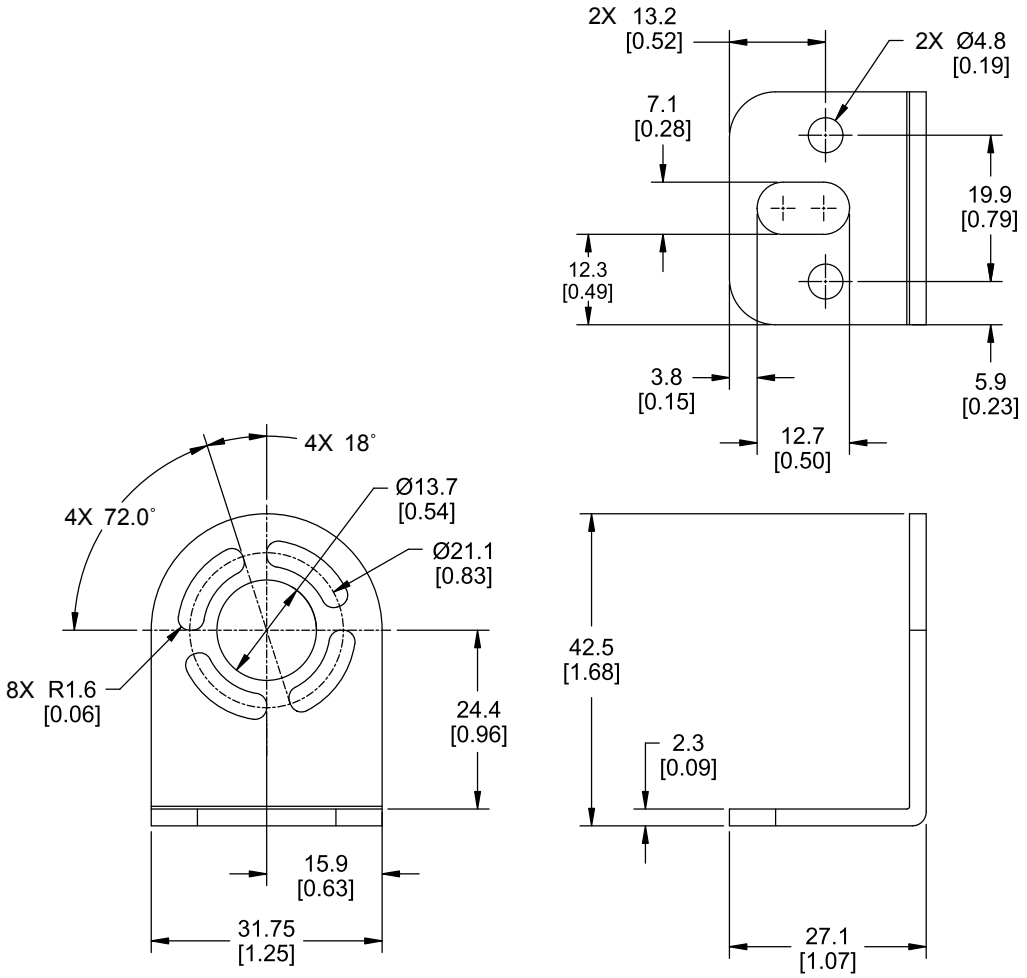


## Standard Center Brackets

All measurements are listed in millimeters [inches], unless noted otherwise. The measurements provided are subject to change.

| Model Number | Description |
|---|---|
| **USCMB-4** | One bracket is included for sensors 600-900 mm long |
| **USCMB-5** | Two brackets are included for sensors 1050-1350 mm long |
| **USCMB-6** | Three brackets are included for sensors 1500 mm long |


© Banner Engineering Corp. All rights reserved.
www.bannerengineering.com

*Figure 4. Clamp piece attaches to the EZ-SCREEN*

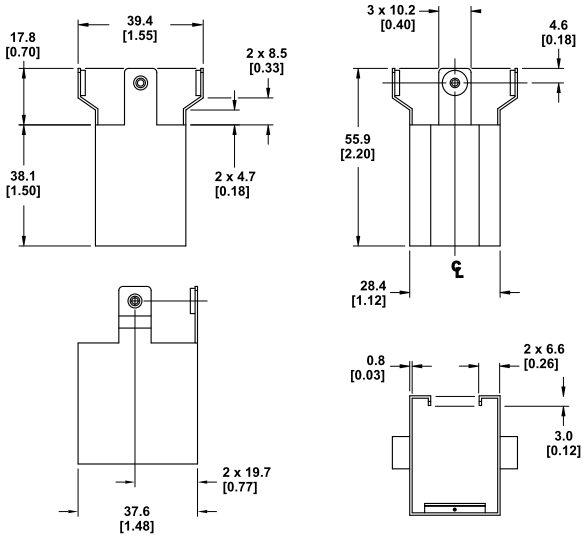


*Figure 5. Mounts to a flat surface with the clamp piece*

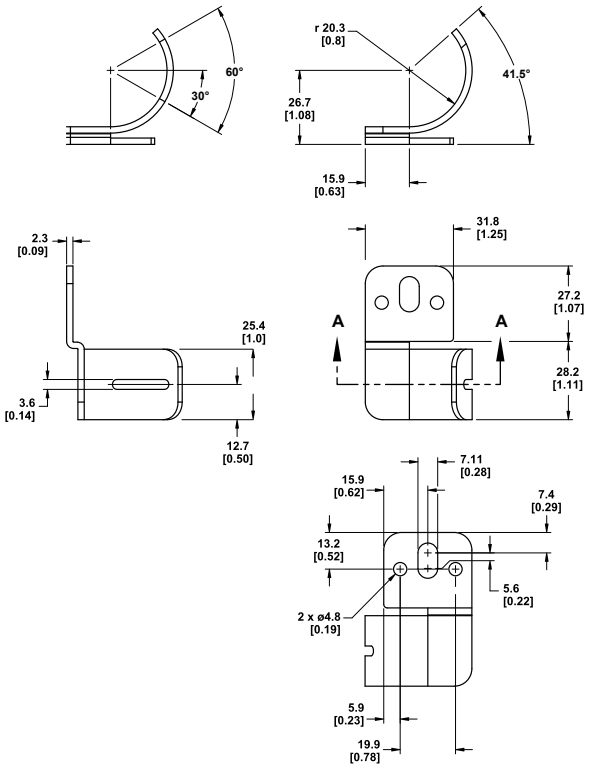


# 3.6 Control Reliability and Safety Categories

To summarize the expected safety circuit performance in high-risk situations, requirements of Control Reliability (OSHA 29CFR1910.217 and ANSI B11.19) and Category 3 or 4 and PL d or PL e (EN ISO 13849-1) demand that a reasonably foreseeable, single failure does not lead to the loss of the safety function, and does not prevent a normal or immediate stop from occurring. The failure or the fault must be detected at or before the next demand of safety (e.g., at the beginning or end of a cycle, or when a safeguard is actuated). The safety-related part of the control system then must issue an immediate stop command, or prevent the next machine cycle or hazardous situation until the failure or fault is corrected.

The effect of ANSI B11.19, and EN ISO 13849-1 is to set a baseline for situations in which a minimum level of performance has been mandated or in cases where a risk assessment has determined a need for Control Reliability, Category 3 or Category 4 level of performance.

In lower-risk safety applications, safeguards and safety circuits do not require the level of performance and fault tolerance described by control reliability, Category 3 or 4 and PL d or PL e. Applications involving situations that could result in a slight or normally reversible injury (e.g., only requiring first aid, as defined by OSHA 29CFR1904) can be solved by EN ISO 13849-1 Category 2 PL c.

EN ISO 13849-1 Category 2 does not require the same level of performance and fault tolerance as required by Control Reliability, Category 3 or Category 4. Safety-related parts of control systems designed to Category 2 “shall be designed so that their function(s) are checked at suitable intervals by the machine control system.” This allows a single fault to lead to the loss of the safety function between the check [test] of the system, but the loss of safety function is detected by the check. By comparison, in a system designed to EN ISO 13849-1 Category 4, a single fault or an accumulation of faults will not lead to a loss of the safety function.

While EN ISO 13849-1 generally applies to the machine level, IEC61496-1/-2 specifies requirements for the design, construction and testing for two levels or “types” of active opto-electronic protective devices (AOPDs) or light curtains (light screens). “Type 2” and “Type 4” describe differing requirements to ensure that appropriate safety-related performance is achieved. The appropriate type is dependent on the overall degree of risk reduction, as determined by the machine’s Risk Assessment (see ISO 12100, ANSI B11.19, or other relevant standard).


© Banner Engineering Corp. All rights reserved.
www.bannerengineering.com

A Type 2 AOPD relies on periodic testing to detect a failure to danger. Between tests, a single fault can result in the loss of the safety function. While this level of performance and fault tolerance is generally not allowed in Category 4 situations, it is acceptable in the lower-risk situations described by Category 2.

While the EZ-SCREEN Type 2 conducts continual internal self-tests and all single faults have been considered, the installation should provide an additional periodic test/check of the EZ-SCREEN Type 2 and its interface to ensure the integrity of the safety function (see "Manual Start/Restart/Remote Test Input and EDM" on page 17). A component failure detected by periodic test/check must cause a “stop” signal to be sent to the guarded machine and put the System into a lockout condition.

Recovery from this type of lockout condition requires:

- Replacement of the failed component (to restore the safety function)
- The appropriate reset procedure.

# 3.7 Operating Features

The Banner EZ-SCREEN Type 2 Safety Light Curtain models described by this manual feature standard functions:

- Automatic reset or manual start/restart output (depending on model)
- External Device Monitoring (EDM) via the Test/Retest input

The System Response Time (Tr) can be determined by the model number on the emitter and receiver.

## 3.7.1 Automatic/Manual Reset Output

Whether a receiver features automatic reset or manual start/restart (latch) output determines whether the System will enter RUN mode automatically after power-up or if it will require a manual reset first. If the System has automatic reset output, other measures must be taken to prevent a pass-through hazard.

For manual start/restart output models, the EZ-SCREEN Type 2 requires a manual reset for the OSSD outputs to turn ON, after power is applied and all beams are clear.

- For automatic reset (trip) output models, the OSSD outputs will turn ON after power is applied and the receiver passes its internal self-test/synchronization and recognizes that all beams are clear. Trip Output models will also turn on after all beams are cleared following a blocked beam.
- For manual start/restart (latch) output models, the EZ-SCREEN Type 2 requires a manual reset for the OSSD outputs to turn ON, whenever power is applied and all beams are clear.

**WARNING:**

- **Use of automatic (trip) or manual (latch) start/restart**
- Failure to follow these instructions could result in a serious injury or death.
- Applying power to the Banner Engineering Corp. device, clearing the defined area, or resetting a latch condition must not initiate dangerous machine motion. Design the machine control circuitry so that one or more initiation devices must be engaged to start the machine (a conscious act), in addition to the Banner Engineering Corp. device going into Run mode.

## 3.7.2 Wiring Options for Emitter/Receiver Swapability

Each EZ-SCREEN Type 2 sensor can be connected to its own power supply or, color-for-color to the other sensor’s cable. The color-for-color connection allows the emitter and receiver positions to be interchanged without rewiring (functionality known as sensor " swapability"). Model CSB.. splitter cordsets and DEE2R.. double-ended cables facilitate interconnection between an EZ-SCREEN Type 2 receiver and emitter, providing a single "homerun" cable for optional swapable connections.


© Banner Engineering Corp. All rights reserved.
www.bannerengineering.com

*Figure 6. Individual cordsets*

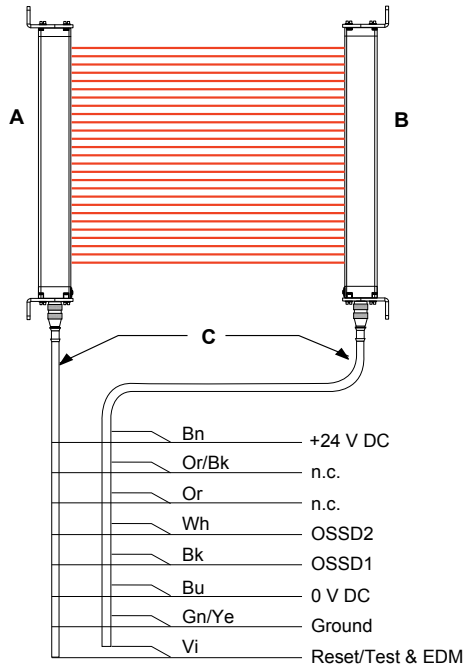


A - Emitter

B - Receiver

C - QDE-8..D Cordsets

*Figure 7. Splitter cordsets*

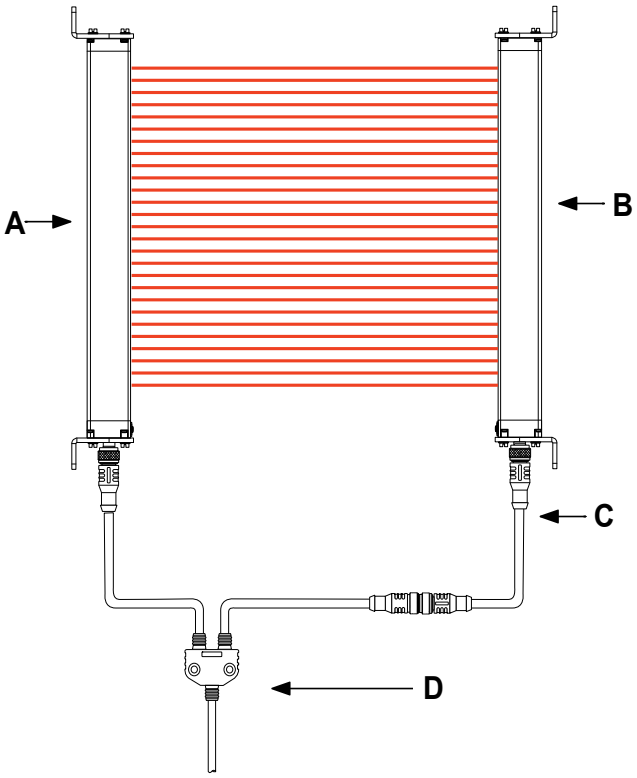


A - Emitter

B - Receiver

C - DEE2R.. Cordsets

D - CSB.. Cordsets

## 3.7.3 Manual Start/Restart/Remote Test Input and EDM

A single input provides the means to reset the system from a manual start/restart or lockout condition, to externally test the light screen and its interface, and external device monitoring (EDM) for proper operation. If the System is in Run condition with outputs ON, operating the switch results in a test. If the System is a manual start/restart condition or a lockout condition, operating the switch results in a reset.

### External Device Monitoring (EDM)

This feature allows the EZ-SCREEN Type 2 system to monitor the status of external devices such as MPCEs. A normally closed and a normally open contact from each monitored device are wired in series-parallel to detect if one of the devices fails.


© Banner Engineering Corp. All rights reserved.
www.bannerengineering.com

### 3.7.4 Status Indicators

Status indicators on both the emitter and receiver are clearly visible on each sensor’s front panel.

*Figure 8. EZ-SCREEN Type 2 emitter and receiver status indicators*

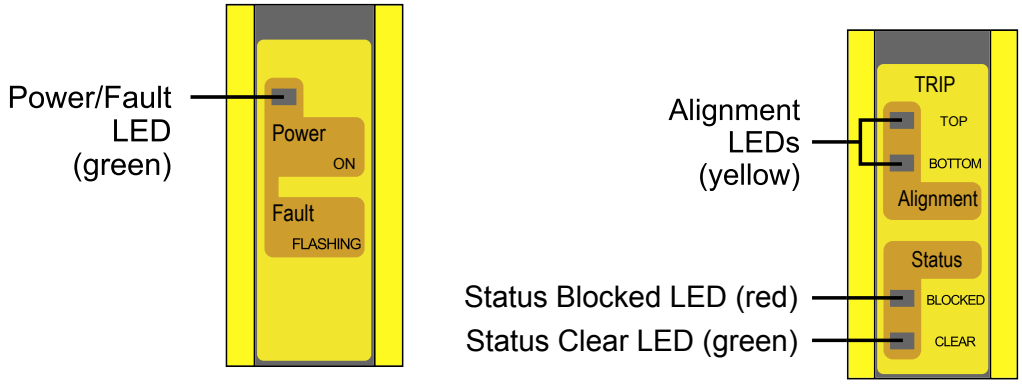



© Banner Engineering Corp. All rights reserved.
www.bannerengineering.com

Chapter Contents

4.1 Mechanical Installation Considerations ..... 19
4.2 Mounting Hardware ..... 29

# Chapter 4 Mechanical Installation

The EZ-SCREEN Type 2 system performance as a safety guarding device depends on:

- The suitability of the application
- The proper mechanical and electrical installation and interfacing to the guarded machine

**WARNING:**

- **Read this Section Carefully Before Installing the System**
- **Failure to follow these instructions could result in serious injury or death.**
- If all mounting, installation, interfacing, and checkout procedures are not followed properly, this Banner Engineering Corp. device cannot provide the protection for which it was designed.
- The user is responsible for ensuring that all local, state, and national laws, rules, codes, or regulations relating to the installation and use of this control system in any particular application are satisfied. Ensure that all legal requirements have been met and that all technical installation and maintenance instructions contained in this manual are followed.
- The user has the sole responsibility to ensure that this Banner Engineering Corp. device is installed and interfaced to the guarded machine by Qualified Persons, in accordance with this manual and applicable safety regulations. A Qualified person is a person who, by possession of a recognized degree or certificate of professional training, or who, by extensive knowledge, training and experience, has successfully demonstrated the ability to solve problems relating to the subject matter and work.

## 4.1 Mechanical Installation Considerations

The two primary factors that influence the layout of the EZ-SCREEN Type 2 system mechanical installation are:

- Minimum distance/safety distance (see "Calculating the Safety Distance (Minimum Distance)" on page 19)
- Eliminating pass-through hazard/hazard points via supplemental guarding (see "Reducing or Eliminating Pass-Through Hazards" on page 22)

Other considerations include:

- Emitter and Receiver Orientation (see "Emitter and Receiver Orientation" on page 26)
- Adjacent Reflective Surfaces (see "Adjacent Reflective Surfaces" on page 24)
- Use of Corner Mirrors (see "Use of Corner Mirrors" on page 25)
- Installation of Multiple Systems (see "Installation of Multiple Systems" on page 27)

**WARNING:**

- **Position the System Components Carefully**
- Failure to observe this warning could result in serious injury or death.
- Position the system components such that the hazard point/hazard cannot be accessed by reaching over, under, around, or through the sensing field. Additional and supplemental guarding may be required.

### 4.1.1 Calculating the Safety Distance (Minimum Distance)

The safety distance (Ds), also called Minimum Distance (S), is the minimum distance required between the defined area and the closest reachable hazard point. The distance is calculated so that when an object or a person is detected (by blocking a sensing beam), the EZ-SCREEN Type 2 sends a stop signal to the machine, causing it to stop by the time the object or person can reach any machine hazard point.


© Banner Engineering Corp. All rights reserved.
www.bannerengineering.com

The distance is calculated differently for U.S. and European installations. Both methods take into account several factors, including a calculated human speed, the total system stopping time (which itself has several components), and the depth penetration factor. After the distance has been determined, record the calculated distance on the Daily Checkout Card.

**WARNING:**

- **Calculate the Safety Distance (Minimum Distance)**
- Failure to establish and maintain the safety distance (minimum distance) could result in serious injury or death.
- Mount the components at a distance from the nearest hazard such that an individual cannot reach the hazard before cessation of the hazardous motion or situation. Calculate this distance using the supplied formulas, as described by ANSI B11.19 and ISO 13855. Mount the components more than 100 mm (4 in) away from the hazard, regardless of the calculated value.

*Figure 9. Safety distance (minimum distance) and hard (fixed) guard*

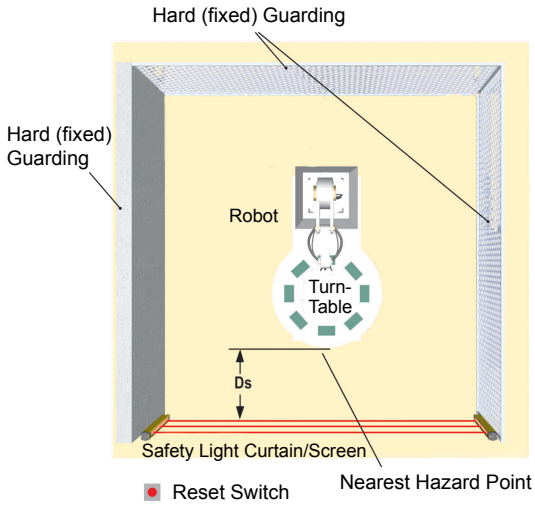


## Formula and Examples

**U.S. Applications**—The Safety (Separation) Distance formula for U.S. applications:

```
Ds = K × (Ts + Tr) + Dpf
```

**Ds**
the Safety Distance, in inches

**K**
1600 mm per second (or 63 in per second), the OSHA 29CFR1910.217, and ANSI B11.19 recommended hand-speed constant (see Note 1 below)

**Ts**
the overall stop time of the machine (in seconds) from the initial stop signal to the final ceasing of all motion, including stop times of all relevant control elements (for example, IM-T-.. Interface Modules) and measured at maximum machine velocity (see Note 3 below)

**Tr**
the maximum response time, in seconds, of the EZ-SCREEN Type 2 emitter/receiver pair (depending on model)

**Dpf**
the added distance due to the depth penetration factor as prescribed in OSHA 29CFR1910.217, and ANSI B11.19 for U.S. applications. Calculate using the formula: Dpf = 3.4 × (d – 7) where d is the resolution of the light curtain (for d < 64 mm). For EZ-SCREEN Type 2, d = 30 mm and Dpf = 78 mm (3 in).

**European Applications**—The Minimum Distance formula for European applications:

```
S = (K × T) + C
```

**S**
the Minimum Distance, in mm, from danger zone to light screen center line; minimum allowable distance is 100 mm ( 175 mm for non-industrial applications), regardless of calculated value

**K**
hand-speed constant (see Note 2 below); **2000 mm/s** (for Minimum Distances ≤ 500 mm) **1600 mm/s** (for Minimum Distances > 500 mm)


© Banner Engineering Corp. All rights reserved.
www.bannerengineering.com

**T**
the overall machine stopping response time (in seconds), from the physical initiation of the safety device and the machine coming to a stop (or the hazard removed). This can be broken down into two parts: **Ts** and **Tr** where **T** = **Ts** + **Tr**

**C**
the additional distance, in mm, based on intrusion of a hand or object towards the danger zone prior to actuation of a safety device. Calculate using the formula (in mm):

```
C = 8 × (d - 14)
```

where `d` is the resolution of the light curtain (for `d` ≤ 40 mm). For EZ-SCREEN Type 2, d = 30 mm and C = 128 mm (5 in).

**Notes:**

1. The OSHA-recommended hand speed constant **K** has been determined by various studies and, although these studies indicate speeds of 1600 mm/sec. (63 in/sec.) to more than 2500 mm/sec. (100 in/sec.), they are not conclusive determinations. Consider all factors, including the physical ability of the operator, when determining the value of **K** to be used.
2. The recommended hand speed constant **K**, derived from data on approach speeds of the body or parts of the body as stated in ISO 13855.
3. **Ts** is usually measured by a stop-time measuring device. If the machine manufacturer's specified stop time is used, at least 20% should be added to allow for possible clutch/ brake system deterioration. This measurement must take into account the slower of the two MPCE channels, and the response time of all devices or controls that react to stop the machine.

**WARNING:**
- **Stop time (Ts) must include the response time of all devices or controls that react to stop the machine**
- If all devices are not included, the calculated safety distance (Ds or S) will be too short, which can lead to serious injury or death.
- Include the stop time of all relevant devices and controls in your calculations.
- If required, each of the two machine primary control elements (MPCE1 and MPCE2) must be capable of immediately stopping the dangerous machine motion, regardless of the state of the other. These two channels of machine control need not be identical, but the stop time performance of the machine (Ts, used to calculate the safety distance) must take into account the slower of the two channels.

## Examples

### For U.S. Applications

**K**
63 in. per second (the hand speed constant set by OSHA)

**Ts**
0.32 (0.250 second is specified by the machine manufacturer; plus 20% safety factor; plus 20 ms for interface module IM-T-9A response time)

**Tr**
0.016 seconds (the specified response time of an LS2..30-600 EZ-SCREEN Type 2)

**Dpf**
3 in

Substitute the numbers into the formula as follows:

```
Ds = K × ( Ts + Tr ) + Dpf
Ds = 63 × (0.32 + 0.016) + 3 = 24.2 inches
```

Mount the EZ-SCREEN Type 2 emitter and receiver so that no part of the defined area will be closer than 24.2 in. to the closest reachable hazard point on the guarded machine.

### For European Applications

**K**
1600 mm per second

**T**
0.336 (0.250 second specified by machine manufacturer; plus 20% safety factor; plus 20 ms interface module response time), plus 0.016 seconds (the specified **LS2..30-600** response time)

**C**
8 x (30 - 14) = 128 mm (14 mm resolution)

Substitute the numbers into the formula as follows:


© Banner Engineering Corp. All rights reserved.
www.bannerengineering.com

```
S = (K × T ) + C
S = (1600 x 0.336) + 128 = 665.6 mm
```

Mount the EZ-SCREEN Type 2 emitter and receiver so that no part of the defined area will be closer than 665.6 mm to the closest reachable hazard point on the guarded machine.

### 4.1.2 Reducing or Eliminating Pass-Through Hazards

A pass-through hazard is associated with applications where personnel may pass through a safeguard, such as the EZ-SCREEN Type 2 Safety Light Curtain (which issues a stop command to remove the hazard), and then continues into the guarded area. This is common in access and perimeter guarding applications. Subsequently, their presence is no longer detected, and the related danger becomes the unexpected start or restart of the machine while personnel are within the guarded area.

A pass-through hazard typically results from large safety distances calculated from long stopping times, large minimum object sensitivities, reach-over, reach-through, or other installation considerations. A pass-through hazard can be generated with as little as 75 mm (3 in) between the sensing field and the machine frame or hard (fixed) guarding.

Eliminate or reduce pass-through hazards whenever possible. While it is recommended to eliminate the pass-through hazard altogether, this may not be possible due to machine layout, machine capabilities, or other application considerations.

One solution is to ensure that personnel are continually sensed while within the hazardous area. This can be accomplished by using supplemental guarding, such as described by the safety requirements in ANSI B11.19 or other appropriate standards.

An alternative method is to ensure that once the safeguarding device is tripped it will latch and will require a deliberate manual action to reset. This method of safeguarding relies upon the location of the reset switch as well as safe work practices and procedures to prevent an unexpected start or restart (auto start/restart (trip) condition) of the guarded machine. The EZ-SCREEN Type 2 Safety Light Curtain provides a configurable manual start/restart (latch) function for these applications.

**WARNING:**

- **Use of the Banner device for Access or Perimeter Guarding**
- Failure to observe this warning could result in serious injury or death.
- If a Banner device is installed in an application that results in a pass-through hazard (for example, perimeter guarding), either the Banner device or themachine primary control element (MPCEs) of the guarded machine must cause a Latched response following an interruption of the defined area.
- The reset of this Latched condition may only be achieved by actuating a reset switch that is separate from the normal means of machine cycle initiation.

**WARNING:**

- **Perimeter guarding applications**
- Failure to observe this warning could result in serious injury or death.
- Use lockout/tagout procedures per ANSI Z244.1, or use additional safeguarding as described by ANSI B11.19 safety requirements or other applicable standards if a passthrough hazard cannot be eliminated or reduced to an acceptable level of risk.

### 4.1.3 Supplemental Safeguarding

As described in "Calculating the Safety Distance (Minimum Distance)" on page 19, properly position the EZ-SCREEN Type 2 such that an individual cannot reach through the defined area and access the hazard point before the machine has stopped.

Additionally, the hazard cannot be accessible by reaching around, under, or over the defined area. To accomplish this,supplemental guarding (hard (fixed) guard, mechanical barriers, such as screens or bars), as described by ANSI B11.19 safety requirements or other appropriate standards, must be installed. Access will then be possible only through the defined area of the EZ-SCREEN Type 2 System or through other safeguarding that prevents access to the hazard (see "Figure: An example of supplemental safeguarding" on page 23).

The mechanical barriers used for this purpose are typically called a hard (fixed) guard; there must be no gaps between the hard (fixed) guarding and the defined area. Any openings in the hard (fixed) guarding must comply with the safe opening requirements of ANSI B11.19 or other appropriate standard.


© Banner Engineering Corp. All rights reserved.
www.bannerengineering.com

*Figure 10. An example of supplemental safeguarding*

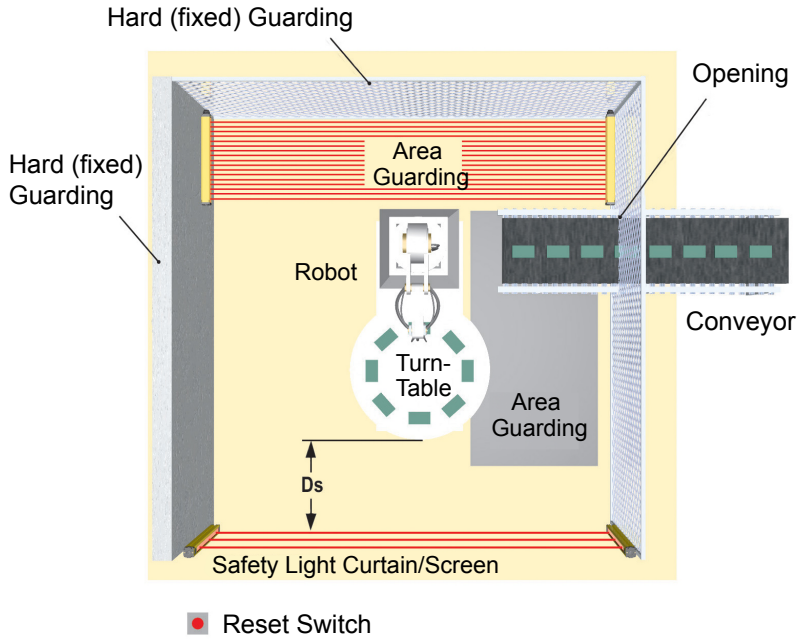


"Figure: An example of supplemental safeguarding" on page 23 shows an example of supplemental safeguarding inside a robotic work cell. The EZ-SCREEN Type 2, in conjunction with the hard (fixed) guarding, is the primary safeguard. Supplemental safeguarding (such as a horizontal-mounted safety light screen as an area guard) is required in areas that cannot be viewed from the reset switch (for example, behind the robot and the conveyor). Additional supplemental safeguarding may be required to prevent clearance or trapping hazards (for example, a safety mat as an area guard between the robot, the turntable, and the conveyor).

**WARNING:**

- **The hazard must be accessible only through the sensing field**
- Incorrect system installation could result in serious injury or death.
- The installation of the EZ-SCREEN Type 2 must prevent any individual from reaching around, under, over or through the defined area and into the hazard without being detected.
- See OSHA CFR 1910.217, ANSI B11.19, and/or ISO 14119, ISO 14120 and ISO 13857 for information on determining safety distances and safe opening sizes for your guarding device. Mechanical barriers (for example, hard (fixed) guarding) or supplemental safeguarding might be required to comply with these requirements.

## 4.1.4 Other Considerations

### Reset Switch Location

**The reset switch must be mounted at a location that complies with the warning and guidelines below.** If any hazardous area is not in view from the switch location, additional means of safeguarding must be provided. The switch should be protected from accidental or unintended actuation (for example, through the use of rings or guards).

A key-actuated reset switch provides some operator or supervisory control, as the key can be removed from the switch and taken into the guarded area. However, this does not prevent unauthorized or inadvertent resets due to spare keys in the possession of others, or additional personnel entering the guarded area unnoticed. When considering where to locate the reset switch, follow the guidelines below.


© Banner Engineering Corp. All rights reserved.
www.bannerengineering.com

**WARNING:**
- **Install reset switches properly**
- Failure to properly install reset switches could result in serious injury or death.
- Install reset switches so that they are accessible only from outside, and in full view of, the safeguarded space. Reset switches cannot be accessible from within the safeguarded space. Protect reset switches against unauthorized or inadvertent operation (for example, through the use of rings or guards). If there are any hazardous areas that are not visible from the reset switches, provide additional safeguarding.

All reset switches must be:

- Outside the guarded area
- Located to allow the switch operator a full, unobstructed, view of the entire guarded area while the reset is performed
- Out of reach from within the guarded area
- Protected against unauthorized or inadvertent operation (such as through the use of rings or guards).

**IMPORTANT:** Resetting a safeguard must not initiate hazardous motion. Safe work procedures require a start-up procedure to be followed and the individual performing the reset to verify that the entire hazardous area/hazard point is clear of all personnel before each reset of the safeguard is performed. If any area cannot be observed from the reset switch location, additional supplemental guarding/ safeguarding must be used: at a minimum, visual and audible warnings of machine start-up.

## Adjacent Reflective Surfaces

**WARNING:**
- **Do not install the system near reflective surfaces**
- Reflective surfaces could reflect the sensing beam(s) around an object or person within the defined area, preventing detection by the system. Failure to prevent reflection problems results in incomplete guarding and an optical short circuit that could result in serious injury or death.
- Do not locate the defined area near a reflective surface. Perform the trip test, as described in the product documentation, to detect such reflection(s).

A reflective surface located adjacent to the defined area may deflect one or more beams around an object in the defined area. In the worst case, an optical short circuit may occur, allowing an object to pass undetected through the defined area.

This reflective surface may result from shiny surfaces or glossy paint on the machine, the workpiece, the work surface, the floor, or the walls. Beams deflected by reflective surfaces are discovered by performing the trip test and the periodic checkout procedures. To eliminate problem reflections:

- If possible, relocate the sensors to move the beams away from the reflective surface(s), being careful to maintain adequate separation distance
- Otherwise, if possible, paint, mask, or roughen the shiny surface to reduce its reflectivity
- Where these are not possible (as with a shiny workpiece or machine frame), determine the worst-case resolution resulting from the optical short circuit and use the corresponding depth penetration factor (Dpf or C) in the Safety Distance (Minimum Distance) formula; or mount the sensors in such a way that the receiver's field of view and/or the emitter's spread of light are restricted from the reflective surface
- Repeat the trip test (see "Conduct a Trip Test" on page 39) to verify these changes have eliminated the problem reflection(s). If the workpiece is especially reflective and comes close to the defined area, perform the trip test with the workpiece in place


© Banner Engineering Corp. All rights reserved.
www.bannerengineering.com

*Figure 11. Adjacent Reflective Surfaces*

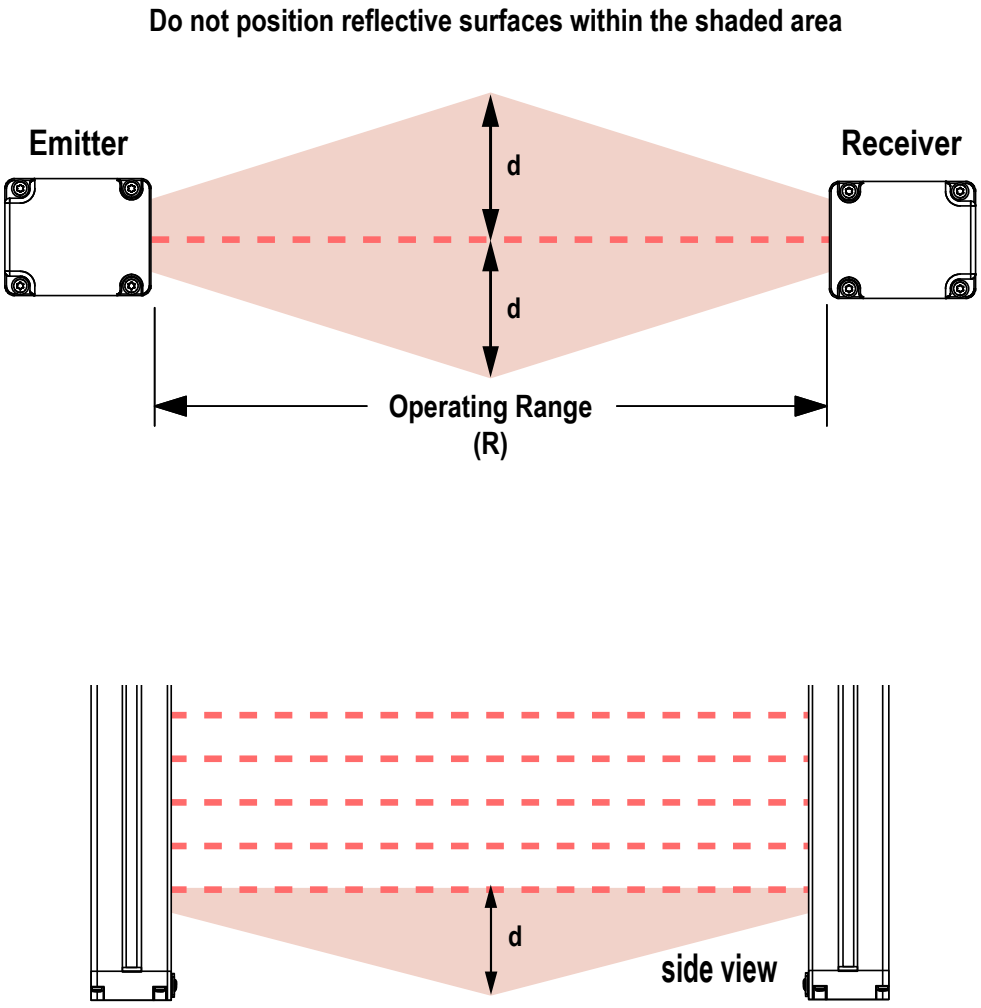


For an operating range of 0.2 m to 3 m (8 in to 10 ft): d = 0.26 m (10 inches)
For an operating range > 3 m (> 10 ft): d = 0.0875 × R (m or ft)

## Use of Corner Mirrors

EZ-SCREEN Type 2 may be used with one or more corner mirrors. Mirrors are not allowed for applications that would allow undetected personnel access into the safeguarded area. The use of glass-surface corner mirrors reduces the maximum specified emitter/receiver separation by approximately 8 percent per mirror, as follows:

*Table 1. Light Curtain Maximum Range*

| Light Curtain Series | 0 Mirrors | 1 Mirror | 2 Mirrors | 3 Mirrors | 4 Mirrors |
|---|---|---|---|---|---|
| SLC4 Safety Light Curtain | 2 m (6.6 ft) | 1.8 m (5.9 ft) | 1.6 m (5.2 ft) | 1.5 m (4.9 ft) | 1.4 m (4.6 ft) |
| EZ-SCREEN® LP Basic (SLPVA) | 4 m (13 ft) | 3.7 m (12.1 ft) | 3.4 m (11.2 ft) | 3.1 ft m (10.3 ft) | 2.8 m (9.2 ft) |
| 14 mm EZ-SCREEN® (SLS) | 6 m (20 ft) | 5.6 m (18.4 ft) | 5.2 m (17.0 ft) | 4.8 m (15.7 ft) | 4.4 m (14.5 ft) |
| EZ-SCREEN® LP (SLP) | 7 m (23 ft) | 6.5 m (21.2 ft) | 6.0 m (19.5 ft) | 5.5 m (18.0 ft) | 5.1 m (16.6 ft) |
| EZ-SCREEN® LS Basic (SLLV) | 8 m (26.2 ft) | 7.4 m (24.3 ft) | 6.8 m (22.3 ft) | 6.2 m (20.3 ft) | 5.7 m (18.7 ft) |
| EZ-SCREEN® LS (SLL) | 12 m (39 ft) | 11 m (36 ft) | 10.1 m (33 ft) | 9.3 m (30.5 ft) | 8.6 m (28 ft) |
| S4B Safety Light Curtain | 12 m (39 ft) | 11 m (36 ft) | 10.1 m (33 ft) | 9.3 m (30.5 ft) | 8.6 m (28 ft) |
| EZ-SCREEN® Type 2 (LS2) | 15 m (50 ft) | 13.8 m (45 ft) | 12.7 m (42 ft) | 11.7 m (38 ft) | 10.8 m (35 ft) |
| 30 mm EZ-SCREEN® (SLS) | 18 m (60 ft) | 16.8 m (55 ft) | 15.5 m (51 ft) | 14.3 m (47 ft) | 13.1 m (43 ft) |

See the specific mirror datasheet or www.bannerengineering.com for more information.


© Banner Engineering Corp. All rights reserved.
www.bannerengineering.com

If mirrors are used, the difference between the angle of incidence from the emitter to the mirror and from the mirror to the receiver must be between 45° and 120° (see "Figure: Using EZ-SCREEN Type 2 sensors in a retroreflective mode" on page 26). If placed at a sharper angle, an object in the light screen may deflect beam(s) to the receiver, preventing the object from being detected, also know as false proxing. Angles greater than 120° result in difficult alignment and possible optical short circuits.

**WARNING:**
- **Retroreflective Mode Installation**
- Failure to follow these instructions may create unreliable sensing and may result in serious injury or death.
- Do not install emitters and receivers in retroreflective mode with less than a 45° angle of incidence. Install emitters and receivers at an appropriate angle.

*Figure 12. Using EZ-SCREEN Type 2 sensors in a retroreflective mode*

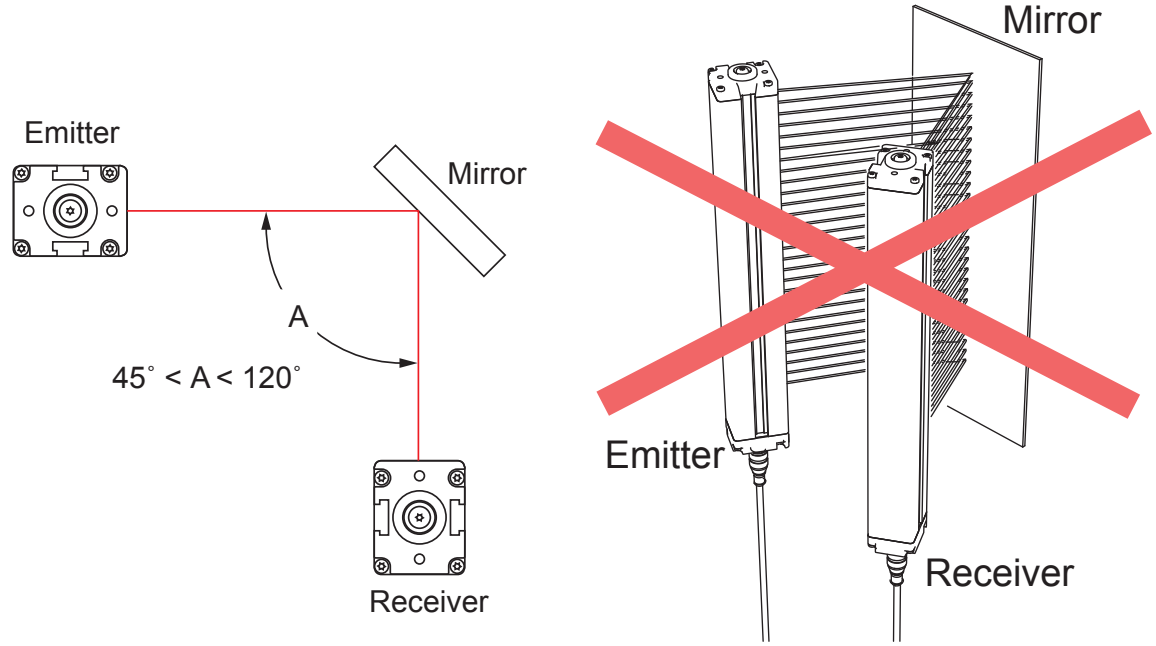


## Emitter and Receiver Orientation

The emitter and receiver must be mounted parallel to each other and aligned in a common plane, with both machine interface cable ends pointing in the same direction.

Never mount the emitter with its machine interface cable end oriented in the opposite direction of the cable end of the receiver. If this occurs, voids in the light curtain may allow objects or personnel to pass through the defined area undetected.

The emitter and receiver may be oriented in a vertical or horizontal plane, or at any angle between horizontal and vertical, as long as they are parallel to each other and their cable ends point in the same direction. Verify that the light curtain completely covers all access to the hazard point that is not already protected by hard (fixed) guard or other supplemental guarding.

**WARNING:**
- **Properly install system components**
- Incorrectly orienting the system components impairs the performance of the system and results in incomplete guarding, which can result in serious injury or death.
- Install the system components with their corresponding cable ends pointing in the same direction.


© Banner Engineering Corp. All rights reserved.
www.bannerengineering.com

*Figure 13. Examples of Correct Emitter/Receiver Orientation*

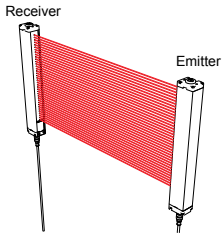


Both cable ends down

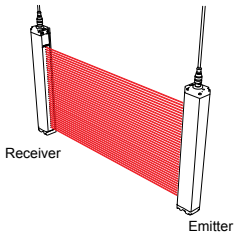


Both cable ends up

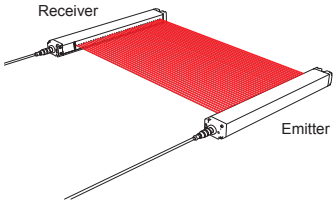


Orientation parallel to floor with both cable ends pointing in the same direction

*Figure 14. Examples of Incorrect Emitter/Receiver Orientation*

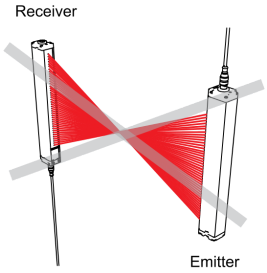


Cable ends point in opposite directions

**Problem:** Voids in defined area

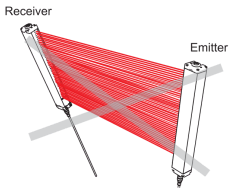


Emitter and receiver not parallel to each other

**Problem:** Reduced excess gain

## Installation of Multiple Systems

Whenever two or more EZ-SCREEN Type 2 emitter and receiver pairs are adjacent to one another, optical crosstalk may take place between the systems. To minimize optical crosstalk, alternate the positions of the emitters and receivers.

When three or more systems are installed in the same plane, optical crosstalk may occur between sensor pairs whose emitter and receiver lenses are oriented in the same direction. In this situation, eliminate optical crosstalk by mounting these sensor pairs exactly in line with each other within one plane, or by adding a mechanical barrier between the pairs.


© Banner Engineering Corp. All rights reserved.
www.bannerengineering.com

*Figure 15. Installation of multiple systems*

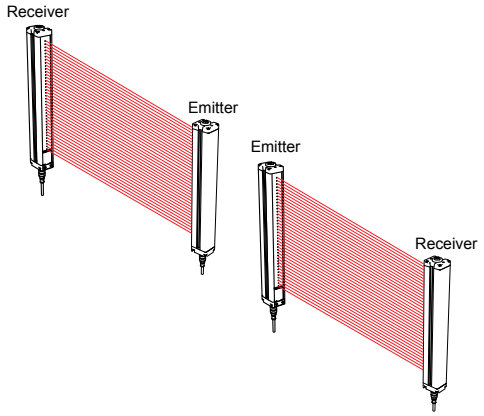


a. Two systems in a horizontal plane

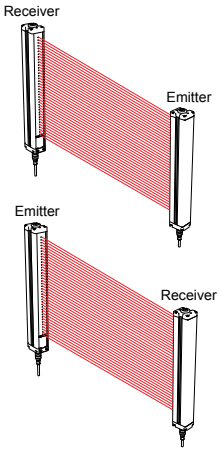


b. Two or three systems stacked (or alternate receiver/ emitter positions)

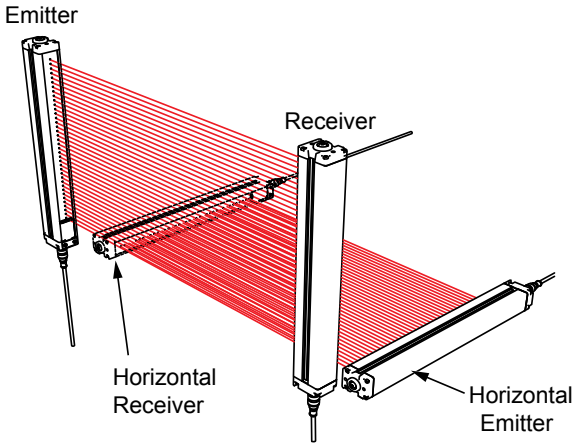


c. Two systems at right angles

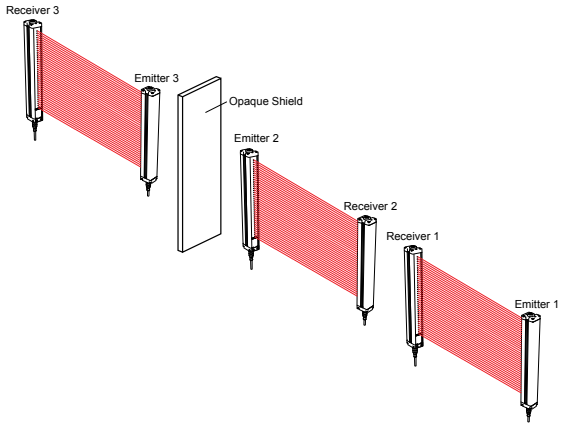


d. Multiple systems

**WARNING:**

- **Properly connect multiple pairs of sensors**
- Connecting multiple output signal switching devices (OSSD) safety outputs to one interface module or otherwise parallel OSSD outputs can result in serious bodily injury or death, and is prohibited.
- Do not connect multiple pairs of sensors to a single device.

**WARNING:**

- **Adjacent components can synchronize incorrectly**
- The light curtain's safety function is reduced when components are not synchronized correctly, creating an unsafe condition that could result in serious injury or death.
- When multiple systems are mounted closely together, or where a secondary emitter is in view (within ±5°) and within range of an adjacent receiver, a receiver can synchronize to the signal from the wrong emitter, reducing the safety function of the light curtain.


© Banner Engineering Corp. All rights reserved.
www.bannerengineering.com

# 4.2 Mounting Hardware

The EZ-SCREEN standard end-cap mounting bracket hardware is supplied with each emitter and receiver.

Brackets are designed to mount directly to MSA Series stands using the hardware with the supplied stands.

*Figure 16. Emitter and receiver end-cap mounting brackets*

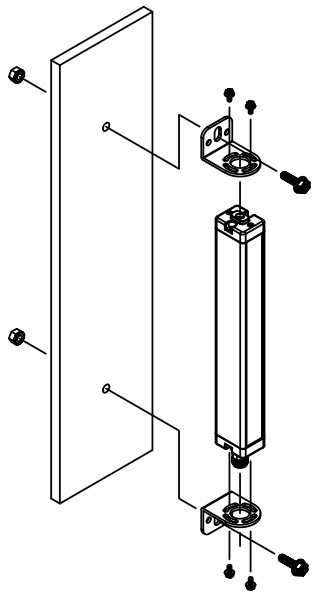

## 4.2.1 Using Center Mounting Brackets

Center mounting brackets are supplied with longer sensors and must be used whenever the sensors are subject to shock or vibration. The sensors are designed to be mounted with up to 450 mm (18 in) distance between brackets:

- Sensors 600 to 900 mm (24 in to 36 in) long are supplied with one center bracket, which should be centered on the sensor.
- Sensors 1050 to 1350 mm (42 in to 54 in) long are supplied with two center brackets, which should be positioned 1/3 of the sensor's length from each sensor end.
- Sensors 1500 mm (59 in) long are supplied with three center brackets that should be positioned with one center bracket in the center and two center brackets 1/3 of the sensor's length from each sensor end.


© Banner Engineering Corp. All rights reserved.
www.bannerengineering.com

*Figure 17. Emitter and Receiver Center Mounting Brackets*

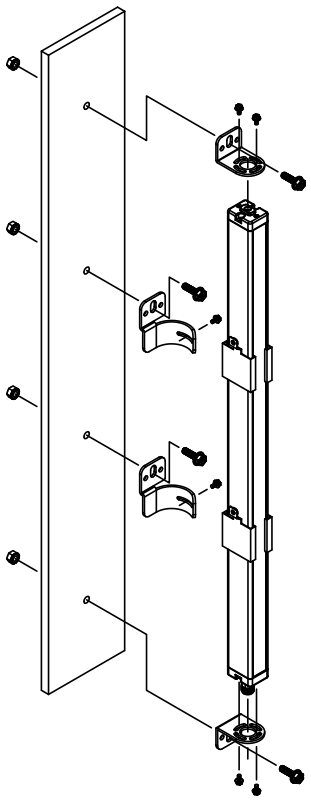

To install each bracket:

1. Spread the clamp and snap over the back of the sensor so that the clamp is securely fastened to the sensor without blocking any beams.
2. Compress the foam spacer and slide the clamp along the length of the sensor housing to align the clamp with the center mounting bracket as shown in "Figure: Emitter and Receiver Center Mounting Brackets" on page 30. Three separate mounting holes on the clamp are provided to allow for all possible mounting configurations.
3. Connect the clamp to the center bracket using the supplied M3 screw.
4. Loosen all the mounting screws to the sensor, align the sensors, then tighten the end screws.
5. Tighten the M3 screw joining the clamp to the center mounting bracket.

### 4.2.2 Mounting and Initial Alignment of Emitter/Receiver Pairs

Emitter/receiver pairs may be spaced from 0.2 to 15 m (8 in to 50 ft) apart. The maximum distance between an emitter and its receiver is reduced if corner mirrors are used. The supplied brackets (when mounted to the sensor end caps) allow ±30° rotation.

To mount each emitter/receiver pair:

1. From a common point of reference (ensuring the calculated safety distance), make measurements to locate the emitter and receiver in the same plane with their midpoints directly opposite each other.

   **IMPORTANT:** The connector ends of both sensors must point in the same direction (see "Emitter and Receiver Orientation" on page 26 ).

2. Mount the emitter and receiver mounting brackets using the supplied M6 bolts and Keps nuts, or user-supplied hardware.
3. Mount the emitter and receiver in their brackets; position their windows directly facing each other.
4. Measure from a reference plane (for example, a level building floor) to the same point(s) on the emitter and receiver to verify their mechanical alignment.
5. Use a carpenter's level, a plumb bob, or the optional LAT-1 Laser Alignment Tool (see "Alignment Aids" on page 62) or check the diagonal distances between the sensors, to achieve mechanical alignment.


© Banner Engineering Corp. All rights reserved.
www.bannerengineering.com

## Verifying Initial Emitter/Receiver Alignment

As you mount the sensors, verify that:

- The emitter and receiver are directly opposite each other.
- Nothing is interrupting the defined area (marked on the sensors).
- The defined area is the same distance from a common reference plane for each sensor.
- The emitter and receiver are in the same plane and are level/plumb and square to each other (vertical, horizontal, or inclined at the same angle).

For angled or horizontal installations, verify that the:

- Distance X at the emitter and receiver are equal.
- Distance Y at the emitter and receiver are equal.
- Distance Z at the emitter and receiver are equal from parallel surfaces.
- Vertical face (that is, the lens) is level/plumb.
- Defined area is square. Check diagonal measurements if possible; see Vertical Installations.

*Figure 18. Angled or horizontal installations*

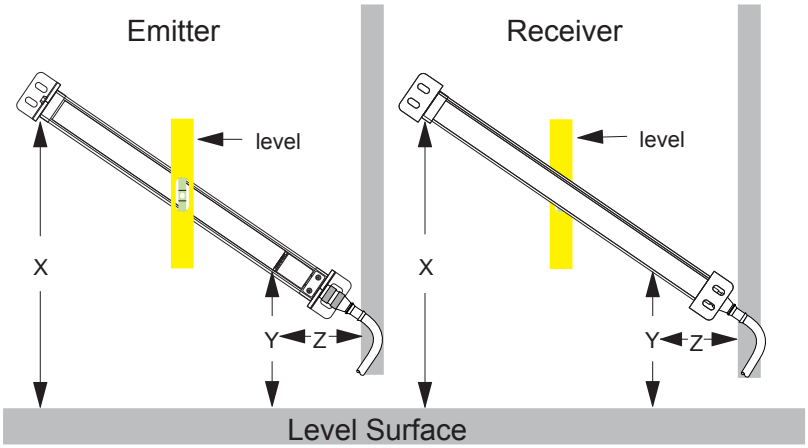


For vertical installations, verify that the:

- Distance X at the emitter and receiver are equal.
- Both sensors are level/plumb (check both the Distance Z at the emitter and receiver are equal from side and face).
- Defined area is square. Check diagonal measurements if possible (Diagonal A = Diagonal B).

*Figure 19. Vertical installations*

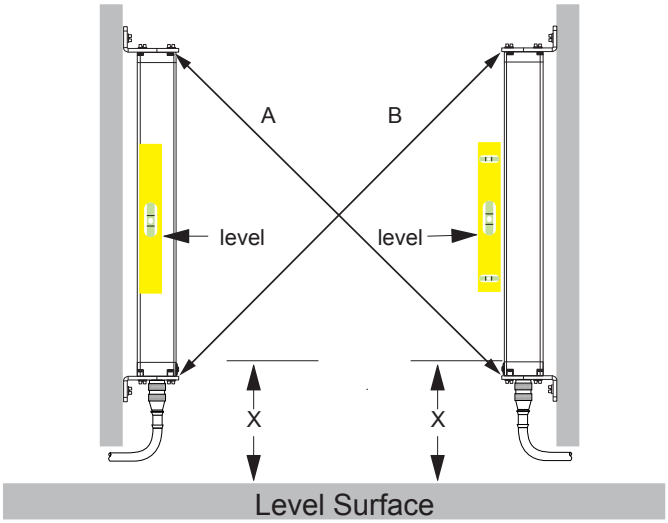



© Banner Engineering Corp. All rights reserved.
www.bannerengineering.com

*Figure 20. Verify the emitter and receiver are not tilted front-to-back or side-to-side*

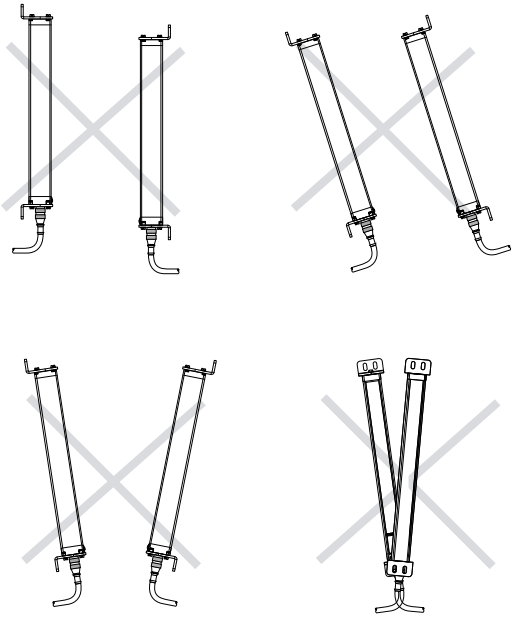


© Banner Engineering Corp. All rights reserved.
www.bannerengineering.com

Chapter Contents

5.1 Routing Cordsets ..... 33
5.2 Initial Electrical Connections ..... 34
5.3 Initial Checkout Procedure ..... 35
5.4 Electrical Connections to the Guarded Machine ..... 40
5.5 Wiring Diagrams ..... 44

# Chapter 5 Electrical Installation and Testing

Follow these steps to electrically install the EZ-SCREEN Type 2 components and interface with the guarded machine.

**WARNING:**

- **Read this Section Carefully Before Installing the System**
- **Failure to follow these instructions could result in serious injury or death.**
- If all mounting, installation, interfacing, and checkout procedures are not followed properly, this Banner Engineering Corp. device cannot provide the protection for which it was designed.
- The user is responsible for ensuring that all local, state, and national laws, rules, codes, or regulations relating to the installation and use of this control system in any particular application are satisfied. Ensure that all legal requirements have been met and that all technical installation and maintenance instructions contained in this manual are followed.
- The user has the sole responsibility to ensure that this Banner Engineering Corp. device is installed and interfaced to the guarded machine by Qualified Persons, in accordance with this manual and applicable safety regulations. A Qualified person is a person who, by possession of a recognized degree or certificate of professional training, or who, by extensive knowledge, training and experience, has successfully demonstrated the ability to solve problems relating to the subject matter and work.

1. Routing cordsets and making initial electrical connections (see "Routing Cordsets" on page 33 and "Initial Electrical Connections" on page 34).
2. Apply power to each emitter/receiver pair (see "Initial Electrical Connections" on page 34).
3. Perform an Initial Checkout Procedure (see "Initial Checkout Procedure" on page 35).
4. Make all electrical interface connections to the guarded machine (see "Electrical Connections to the Guarded Machine" on page 40).
5. Perform a commissioning checkout procedure (see "Commissioning Checkout" on page 50).

## 5.1 Routing Cordsets

Connect the QD connectors and route the sensor cables to the junction box, electrical panel, or other enclosure in which the Interface Module, the redundant mechanically linked interposing relays,final switching devices, or other safety-related parts of the control system are located. This must be done per local wiring code for low-voltage DC control cables and may require installation of electrical conduit. See "Cordsets" on page 56 for selection of Banner-supplied cordsets.

The EZ-SCREEN Type 2 is designed and manufactured to be highly resistant to electrical noise and to operate reliably in industrial settings. However, extreme electrical noise may cause a random Trip or Latch condition; in extreme cases, a lockout condition is possible. Emitter and receiver wiring is low voltage; routing the sensor wires alongside power wires, motor/servo wires, or other high-voltage wiring may inject noise into the EZ-SCREEN Type 2 System. It is good wiring practice (and may be required by code) to isolate emitter and receiver cables from high-voltage wires, avoid routing cables close to “noisy” wiring, and provide a good connection to earth ground.

Sensor QD cabling and any interconnect wiring should meet the following specifications. The wires used should have an insulation temperature rating of at least 90 °C (194 °F).


© Banner Engineering Corp. All rights reserved.
www.bannerengineering.com

*Table 2. Maximum Machine Interface cable length versus total current draw (including both OSSD loads)*

| Cable Size | Current Draw | | | |
|---|---|---|---|---|
| | 0.5 A | 0.75 A | 1.0 A | 1.25 A |
| 0.823 $mm^2$ (18 AWG) | 375 ft | 250 ft | 188 ft | 148 ft |
| 0.518 $mm^2$ (20 AWG) | 240 ft | 160 ft | 120 ft | 95 ft |
| 0.326 $mm^2$ (22 AWG)* | 150 ft | 100 ft | 75 ft | 59 ft |

**NOTE:** Cable length includes power (+24 V DC) and return (0 V DC) wires at +25 °C, and is intended to ensure that adequate power is available to the EZ-SCREEN Type 2 System when the supply is operating at +24 V DC- 10%.

## 5.2 Initial Electrical Connections

**WARNING:**

- **Risk of electric shock**
- Use extreme caution to avoid electrical shock. Serious injury or death could result.
- Always disconnect power from the safety system (for example, device, module, interfacing, etc.), guarded machine, and/or the machine being controlled before making any connections or replacing any component. Lockout/tagout procedures might be required. Refer to OSHA 29CFR1910.147, ANSI Z244-1, or the applicable standard for controlling hazardous energy.
- Make no more connections to the device or system than are described in this manual. Electrical installation and wiring must be made by a Qualified Person[(2)] and must comply with the applicable electrical standards and wiring codes, such as the NEC (National Electrical Code), NFPA 79, or IEC 60204-1, and all applicable local standards and codes.

Lockout/tagout procedures may be required (refer to OSHA1910.147, ANSI Z244-1, ISO 14118, or the appropriate standard for controlling hazardous energy). Follow relevant electrical standards and wiring codes such as the NEC, NFPA79 or IEC60204-1.

For optimal EMI/EMC performance, always connect the ground wire (green/yellow) to an appropriate functional earth ground.

Make the electrical connections in the order described in this section. Do not remove end-caps; no internal connections are to be made. All connections are made through the M12 quick-disconnect connectors.

| Emitter Cordset | Receiver Cordset |
|---|---|
| EZ-SCREEN Type 2 emitters have an 8-pin cordset, but only three conductors are required:<br>• Brown = +24 V DC<br>• Blue = 0 V DC<br>• Green/Yellow = GND | **Do not connect any wires to the machine control circuits (that is, OSSD outputs) at this time.**<br><br>For the initial checkout, only the following EZ-SCREEN Type 2 receiver conductors should be connected:<br>• Brown = +24 V DC<br>• Blue = 0 V DC<br>• Green/Yellow = GND<br><br>Additionally, connect the external reset switch, if used, or test signal contact to the Reset/Test wire (violet) and to 24 V DC. |

**NOTE:** The reset switch must be a normally closed switch that is held open for approximately 1/4 second, then closed to accomplish the reset. The switch must be capable of switching 10 V DC to 30 V DC at 30 mA.

The other wires are for an optional connection that allows for parallel connection (color-for-color) to the receiver cable. This optional hookup provides for sensor interchangeability (or swapability) that facilitates installing either sensor at either QD connection. Besides providing similar cabling, this wiring scheme is advantageous during installation, wiring, and troubleshooting.

[(2)] A person who, by possession of a recognized degree or certificate of professional training, or who, by extensive knowledge, training and experience, has successfully demonstrated the ability to solve problems relating to the subject matter and work.


© Banner Engineering Corp. All rights reserved.
www.bannerengineering.com

### 5.2.1 Sensor Interchangeability

The figures and table below illustrate a wiring option that provides sensor interchangeability (or swapability)—the ability to install either sensor at either QD connection.

The resulting installation provides the ability to swap the emitter and receiver position. This wiring option provides advantages during installation, wiring, and troubleshooting.

To use this option, connect all emitter wires in parallel (color-for-color) to the receiver cable via individual wires or the CSB.. splitter cordset.

Model CSB.. splitter cordsets and DEE2R.. double-ended cordsets allow easy interconnection between an EZ-SCREEN Type 2 receiver and emitter, providing a single homerun cordset.

*Figure 21. Individual cordsets*

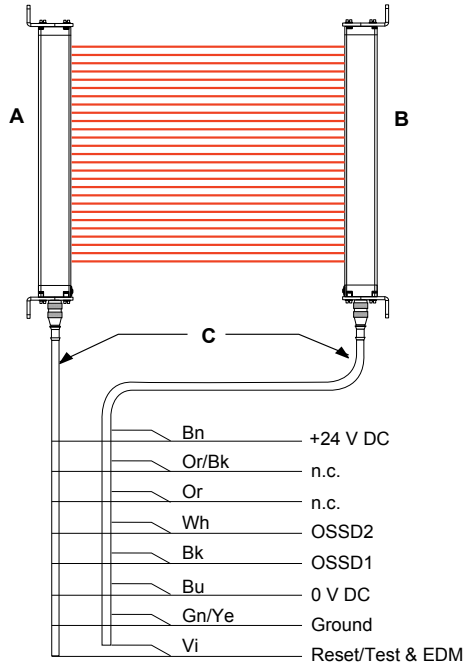


A - Emitter

B - Receiver

C - QDE-8..D Cordsets

*Figure 22. Splitter cordsets*

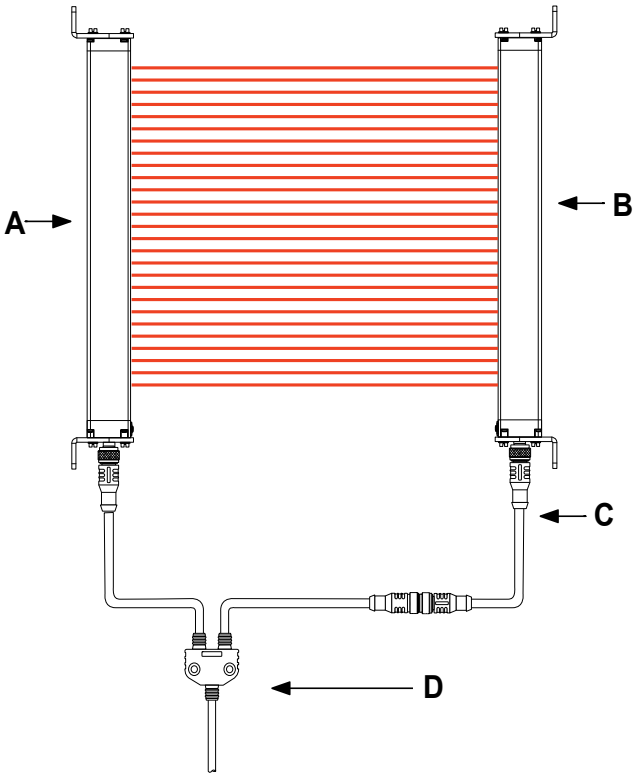


A - Emitter

B - Receiver

C - DEE2R.. Cordsets

D - CSB.. Cordsets

## 5.3 Initial Checkout Procedure

The initial checkout procedure must be performed by a Qualified Person. It must be performed only after configuring the System and after connecting the components.

Perform this procedure to:

- Ensure proper installation when the System is first installed
- Ensure proper System function whenever any maintenance or modification is performed on the System or on the machinery that is guarded by the System.


© Banner Engineering Corp. All rights reserved.
www.bannerengineering.com

### 5.3.1 Configuring the System for Initial Checkout

For the initial checkout, the EZ-SCREEN Type 2 System must be checked without power available to the guarded machine. Final interface connections to the guarded machine cannot take place until the light screen system has been checked out. This may require lockout/tagout procedures (refer to OSHA1910.147, ANSI Z244-1, ISO 14118, or the appropriate standard for controlling hazardous energy). The output signal switching device (OSSD) connections will be made after the initial checkout procedure has been successfully completed.

Verify that:

- Power has been removed from (or is not available to) the guarded machine and its controls or actuators
- The machine control circuit or the Safety/Interface Module is not connected to the OSSD outputs at this time (permanent connections will be made later)

### 5.3.2 Initial Power-Up

1. Inspect the area near the light screen for reflective surfaces, including work pieces and the guarded machine. Reflective surfaces may cause light beams to reflect around a person in the light screen, preventing the person from being detected and not stopping the machine motion (see "Adjacent Reflective Surfaces" on page 24).
2. Eliminate the reflective surfaces by relocating, painting, masking, or roughening them. Any remaining problem reflections will become apparent during the trip test.
3. Verify that power is removed from the EZ-SCREEN Type 2 System and from the guarded machine. Verify the output signal switching device (OSSD) safety outputs are not connected.
4. Remove all obstructions from the light screen.
5. Leaving power to the guarded machine off, make power and earth ground connections on both the emitter and receiver cables (see "Wiring Diagrams" on page 44).
6. Power up the EZ-SCREEN Type 2 System only.
7. Verify that the input power is present to both the emitter and the receiver. At least one indicator on both the emitter and the receiver should be on and the start-up sequence should cycle.
8. Watch the emitter and the receiver LED indicators to determine the light screen alignment status.

*Figure 23. Emitter Status Indicators*

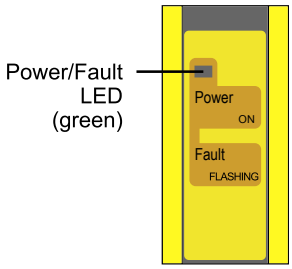


*Figure 24. Receiver Status Indicators*

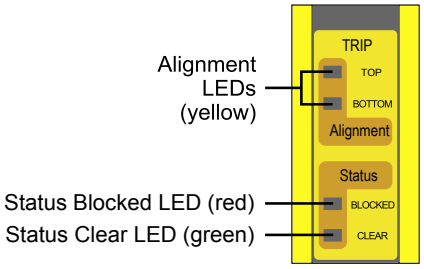


- **Lockout Condition:L** On the emitter, the green Power indicator is flashing or on the receiver, the red Status Blocked indicator is flashing. See "Troubleshooting" on page 53 for diagnostic information.
- **Normal Operating Mode:** To the emitter, the green Power indicator is on.
- **Test Mode, input fault:** On the receiver, the red Status Blocked indicator is on and the green Status Clear indicator is on. Test input open at power-up.
- **Receiver Latch Condition, all optical beams clear:** On the receiver, the red Status Blocked indicator is on and both amber Alignment indicators are flashing. For manual start/restart output receivers, the outputs are on only when all beams are clear and after a manual reset. If a reset routine can cause a Clear (Run) condition, optimize the alignment as described in "Optical Alignment" on page 37. If a Clear (Run) condition cannot be achieved, see “Blocked condition” below.
- **Clear (Run) Condition:** On the receiver, the green Status Clear indicator is on and both amber Alignment indicators are on. To optimize alignment and maximize excess gain, slightly loosen the four sensor mounting screws and rotate one sensor left and right, noting the positions where the red Status Blocked indicator turns On; repeat with the other sensor (see "Optical Alignment" on page 37). Center each sensor between those two positions and tighten the end cap mounting screws, making sure to maintain the positioning as the screws are tightened. The sensor lenses should directly face each other. Proceed to "Conduct a Trip Test" on page 39 after optimum optical alignment is verified.


© Banner Engineering Corp. All rights reserved.
www.bannerengineering.com

- **A Blocked Condition:** On the receiver, the red Status Blocked indicator is on and both amber Alignment indicators are on or off. To remedy, perform the "Optical Alignment" on page 37 procedure.

## 5.3.3 Optical Alignment

Follow these steps to optically align your emitter and receiver.

**WARNING:**
- **Hazard exposure**
- Failure to follow these instructions could result in serious injury or death.
- Verify that no individuals are exposed to any hazard if the output signal switching device (OSSD) outputs turn on when the emitter and receiver become aligned.

1. Verify the sensor mounting (see "Mounting and Initial Alignment of Emitter/Receiver Pairs" on page 30 ).
2. Verify the optimal alignment, adjusting the sensor rotation with the power on:
   a. Verify the emitter and the receiver are pointed squarely at each other. Use a straight edge (for example, a level) to determine the direction the sensor is facing. The sensor face must be perpendicular to the optical axis.

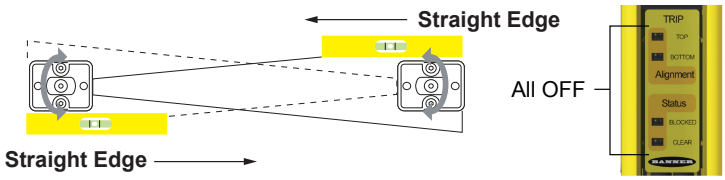


**NOTE:** At power-up, all indicators are tested (flash).

   b. If the synchronization beam is not aligned, the Status Blocked indicator is red and both Alignment indicators will be off.

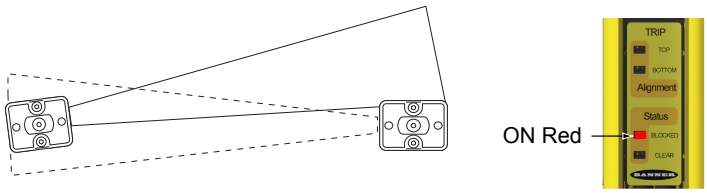


   c. If the green Status and amber Alignment indicators are on, go to step "d". If not, rotate each sensor (one at a time) left and right until the green Status Clear indicator comes on. As the sensor rotates out of alignment, the Status Blocked indicator will turn solid red.

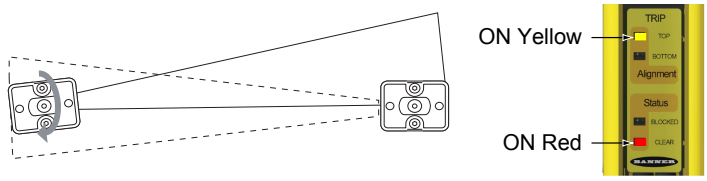


   d. To optimize alignment, note the position where the red Status Blocked indicator comes on when the sensor is rotated both left and right. Center the sensor between the two positions, and tighten the end cap mounting screws, making sure the positioning does not drift as the screws are tightened. For situations where alignment is difficult, use a LAT-1-LP Laser Alignment Tool to assist or confirm alignment by providing a visible red dot along the sensor's optical axis.


© Banner Engineering Corp. All rights reserved.
www.bannerengineering.com

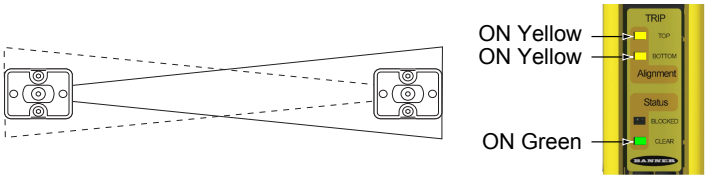


**NOTE:** If at any time the red Status Blocked indicator begins to flash, the System has entered a Lockout condition. See "Troubleshooting" on page 53 for more information.

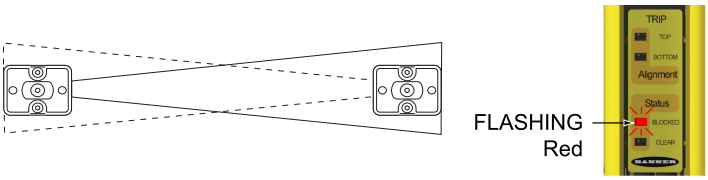


## 5.3.4 Optical Alignment Procedure with Mirrors

EZ-SCREEN Type 2 sensors may be used with one or more corner mirrors for guarding more than one side of an area. The SSM rear-surface glass mirrors are rated at 85% efficiency. Thus, excess gain and sensing range are reduced when using mirrors; see "Use of Corner Mirrors" on page 25.

During any adjustments, allow only one individual to adjust any one item at any one time. In addition to the standard optical alignment procedure, verify:

1. The emitter, receiver, and all mirrors are level and plumb.
2. The middle of the defined area and the center point of the mirrors are approximately the same distance from a common reference point, such as the same height above a level floor.
3. There are equal amounts of mirror surface above and below the defined area such that the optical beams are not passing below or above the mirror.

**NOTE:** An LAT-1 Laser Alignment Tool is very helpful by providing a visible red dot along the optical axis. See "Alignment Aids" on page 62, "Figure: Optical alignment using the LAT-1" on page 38, and Banner Safety Applications Note SA104 (p/n 57477) for more information.

*Figure 25. Optical alignment using the LAT-1*

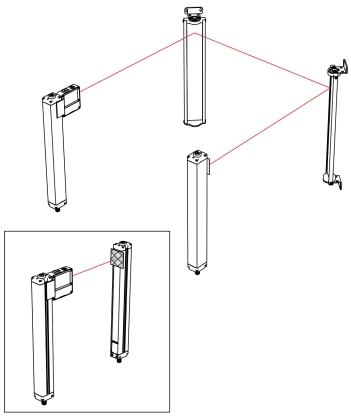

*Figure 26. Corner Mirror Alignment*

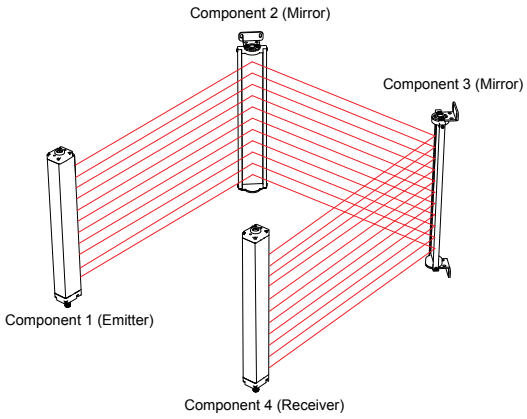



© Banner Engineering Corp. All rights reserved.
www.bannerengineering.com

### 5.3.5 Conduct a Trip Test

After optimizing the optical alignment, conduct the trip test to verify the detection capability of the EZ-SCREEN Type 2 System. This test will also verify correct sensor orientation and identify optical short circuits. After the installation has passed the trip test, the safety outputs may be connected and the commissioning checkout may be performed (initial installations only).

1. Use the 30 mm (1.18 in) diameter specified test piece supplied with the receiver.
2. Verify the System is in Run mode, the Status Clear indicator is green, and the Top and Bottom Status indicators are amber. A manual reset may be required for manual start/restart (latching) models when the top and bottom LEDs are flashing amber.
3. Pass the specified test piece through the defined area in three paths: near the emitter, near the receiver, and midway between the emitter and receiver.

*Figure 27. Trip Test*

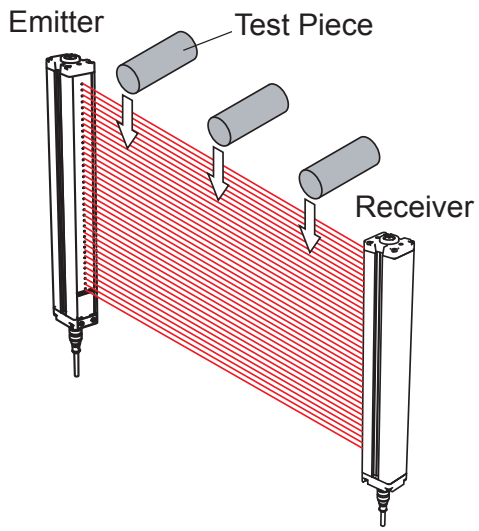


4. During each pass (see "Status Indicators" on page 48 for more details):
   a. Automatic Reset Output Operation: The Status Blocked indicator must turn red and remain on for as long as the test piece remains in the defined area (and the Status Clear indicator is off during the same time). If not, the installation has failed the trip test. When the test piece is removed from the defined area, the Status Clear indicator must turn green and the Status Blocked indicator must go off.
   b. Manual Start/Restart Output Operation: The Status Blocked indicator must turn red and remain on for as long as the test piece remains in the defined area (and the Status Clear indicator is off during the same time). Both amber indicators must remain on unless the top or bottom beam is blocked. If the top (synch) beam is blocked, both Alignment indicators will go off.
   c. If the amber Alignment indicators begin to flash at any time while the test piece is interrupting the defined area, the installation has failed the trip test. Check for correct sensor orientation and reflective surfaces. Do not continue until the situation is corrected. In manual start/restart output operation, the Status Blocked indicator remains on until a manual reset is performed (both amber Alignment indicators are flashing).

**WARNING:**
- **Trip test failure**
- Using a system that has failed a trip test can result in serious bodily injury or death. If the trip test has failed, the system might not stop dangerous machine motion when a person or object enters the sensing field.
- Do not attempt to use the system if the system does not respond properly to the trip test.

5. If mirrors are used in the application: Test the defined area on each leg of the sensing path (for example, between emitter to mirror and between mirror and receiver).


© Banner Engineering Corp. All rights reserved.
www.bannerengineering.com

*Figure 28. Trip Test with Corner Mirror*

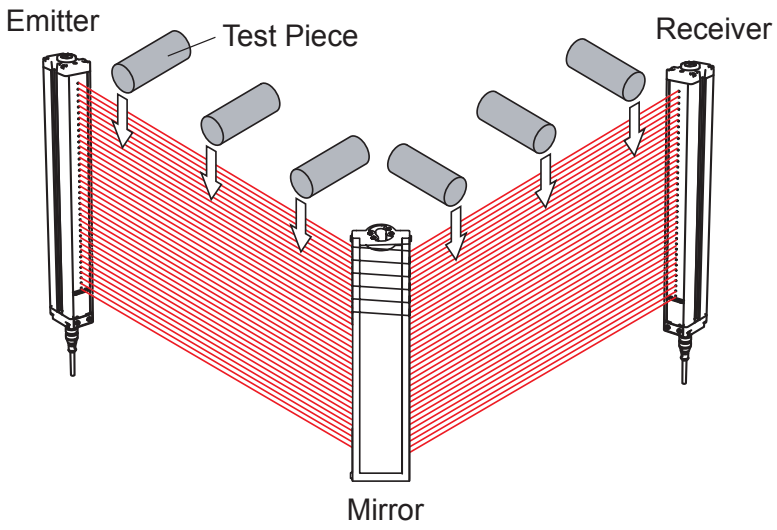


6. If the EZ-SCREEN Type 2 System passes all checks during the trip test, go on to "Electrical Connections to the Guarded Machine" on page 40 .

## 5.4 Electrical Connections to the Guarded Machine

Verify that power has been removed from the EZ-SCREEN Type 2 and the guarded machine. Make the permanent electrical connections as described in "OSSD Output Connections" on page 41 and "Final Switching Devices (FSD) Interfacing Connections" on page 41 as required by each application.

Lockout/tagout procedures may be required (refer to OSHA 1910.147, ANSI Z244-1, ISO 14118, or the appropriate standard for controlling hazardous energy). Follow relevant electrical standards and wiring codes, such as the NEC, NFPA79 or IEC 60204-1.

Supply power and external device monitoring (EDM) should already be connected. The EZ-SCREEN Type 2 must also have been aligned and passed the Initial Checkout, as described in "Initial Checkout Procedure" on page 35.

The final connections to be made or verified are:

- output signal switching device (OSSD) outputs (see "OSSD Output Connections" on page 41)
- final switching device (FSD) interfacing (see "Final Switching Devices (FSD) Interfacing Connections" on page 41)
- machine primary control element/external device monitoring (MPCE/EDM) (see "Machine Primary Control Elements and EDM Input" on page 42)

**WARNING:**

- **Risk of electric shock**
- Use extreme caution to avoid electrical shock. Serious injury or death could result.
- Always disconnect power from the safety system (for example, device, module, interfacing, etc.), guarded machine, and/or the machine being controlled before making any connections or replacing any component. Lockout/tagout procedures might be required. Refer to OSHA 29CFR1910.147, ANSI Z244-1, or the applicable standard for controlling hazardous energy.
- Make no more connections to the device or system than are described in this manual. Electrical installation and wiring must be made by a Qualified Person[3] and must comply with the applicable electrical standards and wiring codes, such as the NEC (National Electrical Code), NFPA 79, or IEC 60204-1, and all applicable local standards and codes.

[3] A person who, by possession of a recognized degree or certificate of professional training, or who, by extensive knowledge, training and experience, has successfully demonstrated the ability to solve problems relating to the subject matter and work.


© Banner Engineering Corp. All rights reserved.
www.bannerengineering.com

### 5.4.1 OSSD Output Connections

Refer to the output specifications in the "Specifications" on page 11 and these warnings before making output signal switching device (OSSD) output connections and interfacing the EZ-SCREEN Type 2 to the machine.

**WARNING:**

- **Interfacing both output signal switching devices (OSSD)**
- Failure to follow these instructions could result in serious injury or death.
- Unless the same degree of safety is maintained, never wire an intermediate device(s) (PLC, PES, PC) between the safety module outputs and the master stop control element it switches such that a failure causes a loss of the safety stop command or the failure allows the safety function to be suspended, overridden, or defeated.
- Connect both OSSD outputs to the machine control so that the machine's safety-related control system interrupts the circuit to the machine primary control element(s), resulting in a non-hazardous condition.

**WARNING:**

- **OSSD Interfacing**
- Failure to properly interface the OSSD Outputs to the guarded machine could result in serious injury or death.
- To ensure proper operation, the Banner device output parameters and machine input parameters must be considered when interfacing the Banner device OSSD outputs to machine inputs. Design machine control circuitry so that all of the following are true:

  The maximum load resistance value is not exceeded.
  The maximum specified OSSD OFF-state voltage does not result in an ON condition.

### 5.4.2 Final Switching Devices (FSD) Interfacing Connections

The final switching device(s) (FSDs) take many forms. The most common are forced-guided devices, mechanically linked relays, or interface modules. The mechanical linkage between the contacts allows the device to be monitored by the external device monitoring (EDM) circuit for certain failures.

Depending on the application, the use of FSDs can facilitate controlling voltage and current that differs from the output signal switching device (OSSD) outputs of the EZ-SCREEN Type 2. FSDs can also be used to control an additional number of hazards by creating multiple safety stop circuits.

#### Protective Stop (Safety Stop) Circuits

A protective stop (safety stop) allows for an orderly cessation of motion for safeguarding purposes, which results in a stop of motion and removal of power from the MPCEs (assuming this does not create additional hazards).

A protective stop circuit typically comprises a minimum of two normally open contacts from forced-guided, mechanically linked relays, which are monitored through external device monitoring (EDM) to detect certain failures to prevent the loss of the safety function. Such a circuit can be described as a "safe switching point". Typically, protective stop circuits are either single-channel, which is a series connection of at least two normally open contacts; or dual-channel, which is a separate connection of two normally open contacts. In either method, the safety function relies on the use of redundant contacts to control a single hazard. If one contact fails On, the second contact arrests the hazards and prevents the next cycle from occurring. See "Generic Wiring to FSDs (manual reset)" on page 45.

The interfacing of the protective stop circuits must be accomplished so that the safety function cannot be suspended, overridden, or defeated unless accomplished in a manner of the same or greater degree of safety as the machine's safety-related control system that includes the EZ-SCREEN Type 2.

The normally open safety outputs from an interface module provide a series connection of redundant contacts that form protective stop circuits for use in either single-channel or dual-channel control. See "Generic Wiring to FSDs (manual reset)" on page 45.

#### Dual-Channel Control

Dual-channel control provides the ability to electrically extend the safe switching point beyond the FSD contacts.

With proper monitoring, this method of interfacing is capable of detecting certain failures in the control wiring between the safety stop circuit and the MPCEs. These failures include a short-circuit of one channel to a secondary source of energy or


© Banner Engineering Corp. All rights reserved.
www.bannerengineering.com

voltage, or a loss of the switching ability of one of the FSD outputs. Such failures may lead to a loss of redundancy, or to a complete loss of safety, if not detected and corrected.

The possibility of a failure to the wiring increases as the physical distance between the FSD safety stop circuits and the MPCEs increases, as the length or the routing of the interconnecting wires increases, or if the FSD safety stop circuits and the MPCEs are located in different enclosures. For this reason, dual-channel control with external device monitoring (EDM) should be used in any installation where the final switching device(s) (FSDs) are located remotely from the machine primary control element(s) (MPCEs).

### Single-Channel Control

Single-channel control uses a series connection of final switching device contacts to form a safe switching point.

After this point in the machine's safety-related control system, failures can occur that would result in a loss of the safety function (such as a short-circuit to a secondary source of energy or voltage). For this reason, single-channel control interfacing should be used only in installations where final switching device (FSD) safety stop circuits and the machine primary control element(s) (MPCEs) are mounted within the same control panel, adjacent to each other, and are directly connected to each other; or where the possibility of such a failure can be excluded. If this cannot be achieved, then dual-channel control should be used.

Methods to exclude the possibility of these failures include, but are not limited to:

- Physically separating interconnecting control wires from each other and from secondary sources of power
- Routing interconnecting control wires in separate conduit, runs, or channels
- Locating all elements (modules, switches, and devices under control) within one control panel, adjacent to each other, and directly connected with short wires
- Properly installing multi-conductor cabling and multiple wires through strain relief fittings. Over-tightening of a strain-relief device can cause short circuits at that point.
- Using positive-opening or direct-drive components, installed and mounted in a positive mode

## 5.4.3 Machine Primary Control Elements and EDM Input

Each of the two machine primary control elements (MPCE1 and MPCE2) must be capable of immediately stopping the dangerous machine motion, irrespective of the state of the other. These two channels of machine control need not be identical, but the stop time performance of the machine (Ts, used to calculate the safety distance, see "Calculating the Safety Distance (Minimum Distance)" on page 19) must take into account the slower of the two channels. Some machines offer only one Primary Control Element. For such machines, it may be necessary to duplicate the circuit of the single MPCE, by adding a second. Refer to "Generic Wiring to FSDs (manual reset)" on page 45 and "Generic Wiring — Interface Module (2-Channel EDM, Manual Reset)" on page 46, or consult the machine manufacturer for additional information.

## 5.4.4 Manual Reset/Remote Test Input and EDM

A means is provided for the connection of an external remote test switch or contact (typically a normally open, held closed). Cycling this switch "turns Off" both OSSD outputs.

A single input provides the means to reset the system from a latch or lockout condition, to externally test the light screen and its interface, and to monitor external devices (EDM) for proper operation. If the System is in Run condition with outputs On, operating the switch results in a test. If the System is Latched or Locked Out, operating the switch results in a reset. If this input is connected to 0V dc or left floating, the System goes to a lockout condition on power-up. (See "Troubleshooting" on page 53 for clearing lockouts.)

Connect the receiver's reset/test wire (pin 8) to the supply voltage (see "Generic Wiring to FSDs (manual reset)" on page 45 and "Generic Wiring — Interface Module (2-Channel EDM, Manual Reset)" on page 46) via the reset switch. The switch should be a normally closed (N.C.) reset switch, or contacts of the Machine Control Test circuit (typically a normally open contact held or energized closed), or the monitoring contacts of the external device(s) being verified. One switch could be used for the Reset and Test functions, or they can be separate switches. However, all switches should be mounted as specified for a reset switch (see "Reset Switch Location" on page 23).

### Manual Reset/System Test Procedure

To operate the switch (and perform a manual reset or a system test), open the normally closed (N.C.) switch for a minimum of 1/4 second and then close it.

### Manual Reset

From a Latched or lockout condition, operating the switch results in a manual reset. Safe work procedures must require that a start-up procedure is followed and that the individual performing the reset of the guarding device verifies that the entire hazardous area is clear of all personnel before performing each reset. If any area can not be observed from the reset switch location, additional supplemental guarding must be used: at minimum, visual and audible warnings of machine start-up.


© Banner Engineering Corp. All rights reserved.

Resetting a safeguarding device must not initiate hazardous motion.

### Remote (External) Test

When in RUN mode, opening this switch for more than 1/4 second initiates a Test cycle that turns off the output signal switching device outputs and generates an internal self-test.

- Automatic (Machine) Test: An external switch, typically a normally open contact that is held closed, is used to externally generate a test cycle of the EZ-SCREEN Type 2 and its interface. Depending on the application, this switch can be a limit-style switch, a hard contact from a relay, or an output from the machine control logic.
- Manual Test: A normally closed (N.C.) momentary type switch used for manual reset can also be used to manually initiate a test cycle. This remote test input may be useful for EZ-SCREEN Type 2 System setup and to verify machine control circuit operation.

**WARNING:**

- **Test the safeguarding function and verify proper operation**
- Failure to test the safeguarding function at appropriate intervals, verify proper operation, and to correct problems can lead to the loss of the safety function and an increased risk of harm.
- A machine or automatic test of the Banner Engineering Corp. device and its interface might be required as determined by a risk assessment and applicable standard, for example, ISO 14121 and EN ISO 13849-1.
- Verify that the Banner Engineering Corp. device and the guarded machine perform as outlined in the checkout procedures and any problem(s) are found and corrected. The user is responsible to perform such checks on a regular basis and before the system is returned to service.

### External Device Monitoring Connection

It is strongly recommended that one normally closed and one normally open, forced-guided monitoring contact of eachfinal switching device (FSD) and machine primary control element (MPCE) be connected to the Monitoring circuit (see "Generic Wiring to FSDs (manual reset)" on page 45 and "Generic Wiring — Interface Module (2-Channel EDM, Manual Reset)" on page 46). If this is done, proper operation of the MPCEs will be verified.

Receiver quick disconnect pin 8 provides a connection for external device monitoring. External Device Monitoring (EDM) must be wired in one of two configurations: Power Monitoring or No EDM.

- Power Monitoring is a series-parallel connection of monitor contacts that are forced-guided (mechanically linked) from each device controlled by the EZ-SCREEN. The monitoring contacts should transition within 200 milliseconds of the output signal switching device (OSSD) outputs switching ON or OFF. If the transition results in an open condition on pin 8 (Reset/Test input) longer than 200 ms, a Test cycle will turn off the OSSD outputs. Refer to "Generic Wiring to FSDs (manual reset)" on page 45 and "Generic Wiring — Interface Module (2-Channel EDM, Manual Reset)" on page 46 for Power Monitoring wiring.
- No Monitoring. Use this configuration initially to perform the initial checkout; see "Initial Checkout Procedure" on page 35. If No Monitoring is selected, the user must ensure that any single failure of the external devices does not result in a hazardous condition and, in such a case, a successive machine cycle will be prevented. To configure the System for No Monitoring, simply do not interface the Power Monitoring circuit (i.e., the four forced-guided normally open contacts from each device) and connect directly to +24 V DC.

**WARNING:**

- **External Device Monitoring (EDM)**
- Creating a hazardous situation could result in serious injury or death.
- If the system is configured for “no monitoring,” it is the user’s responsibility to ensure this does not create a hazardous situation.

## 5.4.5 Preparing for System Operation

After the initial trip test has been accomplished, and the output signal switching device (OSSD) safety outputs and external device monitoring (EDM) connections have been made to the machine to be controlled, the EZ-SCREEN Type 2 is ready for testing in combination with the guarded machine.

The operation of the EZ-SCREEN Type 2 with the guarded machine must be verified before the combined System and machine may be put into service. To do this, a Qualified Person must perform the Commissioning Checkout Procedure (see "Commissioning Checkout" on page 50).


© Banner Engineering Corp. All rights reserved.
www.bannerengineering.com

# 5.5 Wiring Diagrams

## 5.5.1 Generic Emitter Wiring Diagram

*Figure 29. Emitter—Generic Wiring Diagram*

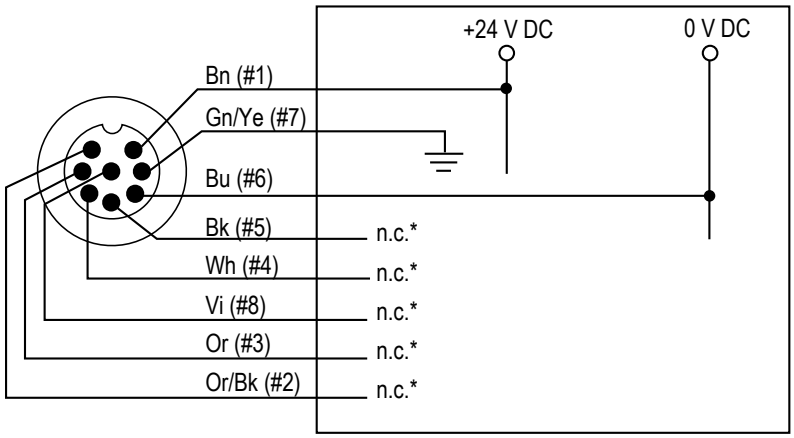


**NOTE:** *Pins 2, 3, 4, 5, and 8 are not connected or are connected in parallel to the same color wire from the receiver cable.


© Banner Engineering Corp. All rights reserved.
www.bannerengineering.com

## 5.5.2 Generic Wiring to FSDs (manual reset)

*Figure 30. Generic Wiring to FSDs (manual reset)*

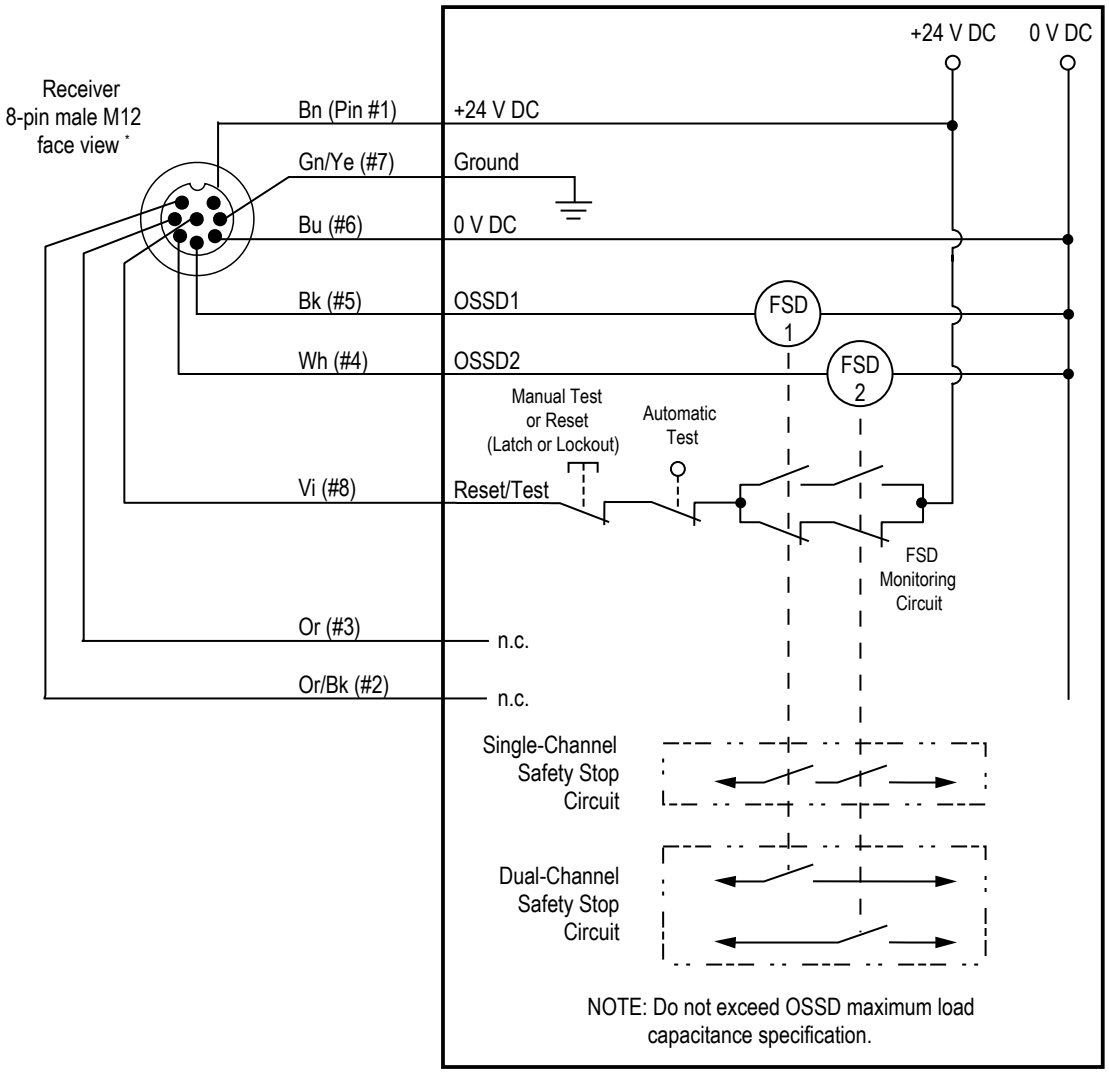


*See "Single-Ended (Machine Interface) Cordsets" on page 56 for available cordsets.

**NOTE:** Pins 2 and 3 are not connected, or are connected in parallel to the same color wire from the emitter cordset and properly terminated.


© Banner Engineering Corp. All rights reserved.
www.bannerengineering.com

## 5.5.3 Generic Wiring — Interface Module (2-Channel EDM, Manual Reset)

*Figure 31. Generic Wiring — Interface Module (2-Channel EDM, Manual Reset)*

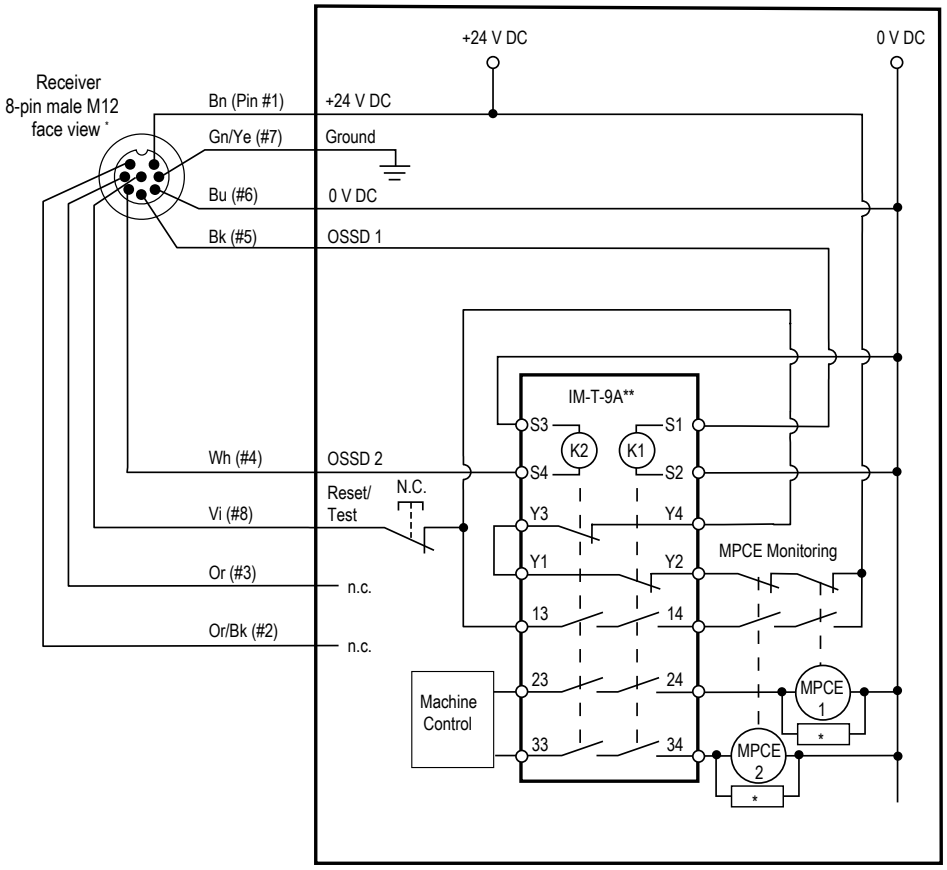


**NOTE:**

- Pins 2 and 3 are not connected, or are connected in parallel to the same color wire from the emitter cordset and properly terminated.
- Installation of transient (arc) suppressors across the coils of MPCE1 and MPC2 is recommended.
- See "Accessories" on page 56 for available cordset information

Other interfacing modules and solutions are available, see "Accessories" on page 56.

**WARNING:**

- **Properly install arc or transient suppressors**
- Failure to follow these instructions could result in serious injury or death.
- Install any suppressors as shown across the coils of the machine primary control elements. Do not install suppressors directly across the output contacts of the safety or interface module. In such a configuration, it is possible for suppressors to fail as a short circuit.


© Banner Engineering Corp. All rights reserved.
www.bannerengineering.com

Chapter Contents

6.1 Security Protocol ..... 47
6.2 Reset Procedures ..... 47
6.3 Status Indicators ..... 48
6.4 Normal Operation ..... 49

# Chapter 6 System Operation

## 6.1 Security Protocol

Certain procedures for installing, maintaining, and operating the EZ-SCREEN Type 2 must be performed by either Designated Persons or Qualified Persons.

A **Designated Person** is identified and designated in writing, by the employer, as being appropriately trained and qualified to perform system resets and the specified checkout procedures on the EZ-SCREEN Type 2. The Designated Person is empowered to:

- Perform manual resets and hold possession of the reset key (see "Reset Procedures" on page 47)
- Perform the Daily Checkout Procedure

A **Qualified Person**, by possession of a recognized degree or certificate of professional training, or by extensive knowledge, training, and experience, has successfully demonstrated the ability to solve problems relating to the installation of the EZ-SCREEN Type 2 System and its integration with the guarded machine. In addition to everything for which the Designated Person is empowered, the Qualified Person is empowered to:

- Install the EZ-SCREEN Type 2 System
- Perform all checkout procedures
- Make changes to the internal configuration settings
- Reset the System following a lockout condition

## 6.2 Reset Procedures

System resets are performed using an external reset switch. This switch must be located outside the guarded area, and must not be within reach from within the guarded area (see "Reset Switch Location" on page 23). Its location should provide a clear view of the entire safeguarded area. If any hazardous area is not in view from the switch location, additional means of safeguarding must be provided. The switch should be protected from accidental or unintended actuation (for example, through the use of rings or guards).

If supervisory control of the reset switch is required, a key reset (manual reset) switch may be used, with the key kept in the possession of a Designated Person or Qualified Person. Using a key switch provides some level of personal control, since the key may be removed from the switch. This hinders a reset while the key is under the control of an individual, but must not be relied upon solely to guard against accidental or unauthorized reset. Spare keys in the possession of others or additional personnel entering the safeguarded area unnoticed may create a hazardous situation.

### 6.2.1 Resetting the Receiver

The EZ-SCREEN Type 2 receiver has a Reset input, pin 8 (violet wire), that provides for a manual reset input signal.

A receiver manual reset is required in the following situations:

- Automatic Reset (Trip) Output operation – only after a lockout condition (see "Troubleshooting and Lockout Conditions" on page 53 for the causes).
- Manual Start/Restart (Latch) Output operation – at power-up, after each manual start/restart condition occurs, or after a lockout condition.

To reset the receiver, open the reset switch for 1/4 second, then close it. An alternative method of resetting the receiver to clear a fault is to power the receiver down, then power it back up.

### 6.2.2 Resetting the Emitter

In the rare occurrence that an emitter requires a reset, power the sensor down, then power it up. Emitter resets are needed only if a Lockout occurs.


© Banner Engineering Corp. All rights reserved.
www.bannerengineering.com

# 6.3 Status Indicators

The emitter has one LED and the receiver has four, to provide an ongoing indication of light screen and system operation. In normal operation, the status indicators are as described. Additional LED condition combinations indicate errors or faults; refer to "Troubleshooting" on page 53.

## 6.3.1 Receiver Status Indicators

On the receiver, two Status indicators (Blocked and Clear) work together to indicate the status of the light screen.

| Indicator | Color | On | Flashing | Off |
|---|---|---|---|---|
| Clear Status | Green | Light screen aligned and clear; outputs On | Test mode (with Red On) | Light screen blocked; outputs Off |
| Blocked Status | Red | Light screen blocked; outputs Off | Lockout | Light screen aligned and clear; outputs On |

*Figure 32. Status indicator behavior during the trip test*

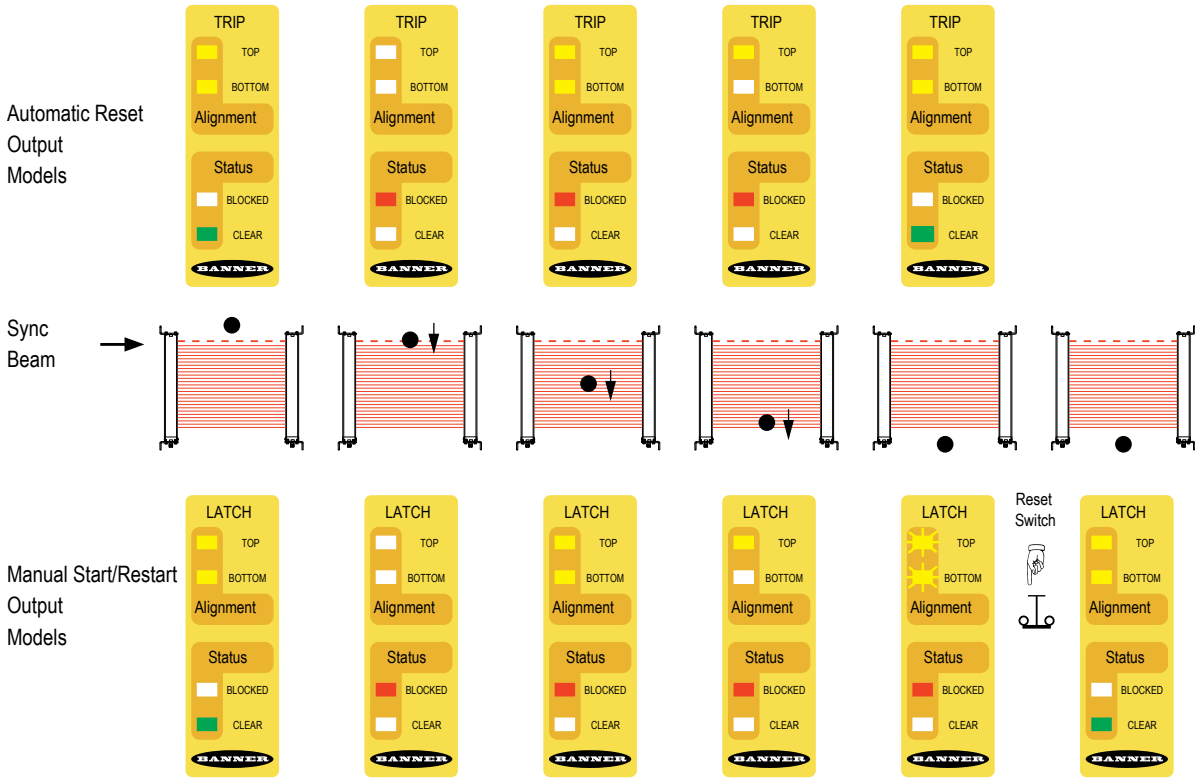


## 6.3.2 Receiver Alignment Indicators

Two amber alignment indicators (top and bottom) tell the alignment status of the top and bottom beams in the light screen.

This is helpful for sensor alignment: first align the top beam (the sync beam), then the bottom beam. The Alignment indicators also flash together to indicate that a manual reset is needed (manual start/restart (latch) output models).

| Indicator | Color | On | Flashing | Off |
|---|---|---|---|---|
| Top Alignment | Amber | Top (sync) beam is aligned and clear | (Both together) System is aligned; waiting for manual reset (manual start/restart models) | Top (sync) beam is blocked or misaligned |
| Bottom Alignment | Amber | Bottom beam is aligned and clear | | Bottom beam is blocked or misaligned; sync beam possibly blocked |

## 6.3.3 Emitter Indicators

Power/Fault Indicator: Green LED indicates whether power is applied or a Fault condition exists.


© Banner Engineering Corp. All rights reserved.
www.bannerengineering.com

| Emitter | | | | |
|---|---|---|---|---|
| Indicator | Color | ON | Flashing | OFF |
| Power/Fault | Green | Power is applied | Fault indication | No Power |

# 6.4 Normal Operation

## 6.4.1 System Power-Up

Automatic reset output systems: When power is applied, each sensor conducts self-tests to detect critical internal faults and prepare for operation. If either sensor detects a critical fault, scanning ceases, the receiver outputs remain off and diagnostic information is displayed via the LEDs; see "Troubleshooting and Lockout Conditions" on page 53). If no faults are detected, the receiver looks for an optical sync pattern from the emitter. If the receiver is aligned and receiving the proper sync pattern, it enters Run mode and begins scanning to determine the blocked or clear status of each beam. No manual reset operation is required.

Manual start/restart output systems: When power is applied, each sensor conducts self-tests to detect critical internal faults and prepare for operation. If either sensor detects a critical fault, scanning ceases, the receiver outputs remain off and diagnostic information is displayed via the LEDs; see "Troubleshooting and Lockout Conditions" on page 53). If no faults are detected, the receiver looks for an optical sync pattern from the emitter. If the receiver is aligned and receiving the proper sync pattern, it begins scanning to determine the blocked or clear status of each beam. When all beams are aligned, the Yellow Alignment indicators flash to indicate the System is waiting for a manual reset. After a valid manual reset, the System enters Run mode and begins scanning.

## 6.4.2 Run Mode

Automatic reset output systems: If any beams become blocked while the System is running, the receiver outputs turn off within the stated System response time (see "EZS Type 2 Models With Response Times" on page 9). When all the beams become clear, the receiver outputs come back on. No resets of any kind are needed. All required machine control resets are provided by the machine control circuit.

Manual start/restart output systems: If any beams become blocked while the System is running, the receiver outputs turn off within the stated System response time (see "EZS Type 2 Models With Response Times" on page 9). When all the beams become clear, the receiver's Clear Status indicator is green and the Alignment indicators flash, indicating the System is waiting for a manual latch reset. When a valid reset signal is received and all beams remain clear, the receiver outputs turn on.

Internal faults (lockouts): If either sensor detects a critical fault, scanning ceases, the receiver outputs turn off and diagnostic information is displayed via the LEDs. See "Troubleshooting and Lockout Conditions" on page 53 for resolution of error/fault conditions.

## 6.4.3 Manual Reset Procedure

Open the reset switch for at least 1/4 second, then close it.


© Banner Engineering Corp. All rights reserved.
www.bannerengineering.com

Chapter Contents

7.1 Schedule of Checkouts ..... 50
7.2 Commissioning Checkout..... 50

# Chapter 7 Checkout Procedures

This section lists the schedule of checkout procedures and describes where each procedure is documented. Checkouts must be performed as described. Results should be recorded and kept in the appropriate place (for example, near the machine, and/or in a technical file).

Banner Engineering highly recommends performing the System checkouts as described. However, a Qualified Person (or team) should evaluate these generic recommendations, considering their specific application, and determine the appropriate frequency of checkouts. This will generally be determined by a risk assessment, such as the one contained in ANSI B11.0. The result of the risk assessment will drive the frequency and content of the periodic checkout procedures and must be followed.

## 7.1 Schedule of Checkouts

Checkout cards and this manual can be downloaded at www.bannerengineering.com.

| Checkout Procedure | When to Perform | Where to Find the Procedure | Who Must Perform the Procedure |
|---|---|---|---|
| Trip Test | At Installation<br><br>Any time the System, the guarded machine, or any part of the application is altered. | "Conduct a Trip Test" on page 39 | Qualified Person |
| Commissioning Checkout | At Installation<br><br>Whenever changes are made to the System (for example, either a new configuration of the EZ-SCREEN Type 2 or changes to the guarded machine). | "Commissioning Checkout" on page 50 | Qualified Person |
| Shift/Daily Checkout | At each shift change<br><br>Machine setup change<br><br>Whenever the System is powered up<br><br>During continuous machine run periods, this checkout should be performed at intervals not to exceed 24 hours. | **Daily Checkout Card** (Banner p/n 122450)<br>A copy of the checkout results should be recorded and kept in the appropriate place (for example, near or on the machine, in the machine's technical file). | Designated Person or Qualified Person |
| Semi-Annual Checkout | Every six months following System installation, or whenever changes are made to the System (either a new configuration of the EZ-SCREEN Type 2 or changes to the machine). | **Semi-Annual Checkout Card** (Banner p/n 122451)<br>A copy of the checkout results should be recorded and kept in the appropriate place (for example, near or on the machine, in the machine's technical file). | Qualified Person |

## 7.2 Commissioning Checkout

Perform this checkout procedure as part of the System installation after the System has been interfaced to the guarded machine, or whenever changes are made to the System (either a new configuration of the EZ-SCREEN Type 2 or changes to the machine). A Qualified Person must perform the procedure. Checkout results should be recorded and kept on or near the guarded machine as required by applicable standards.

**WARNING:**

- **Do not use the system until the checkouts are verified**
- Attempts to use the guarded/controlled machine before these checks are verified could result in serious injury or death.
- If all these checks cannot be verified, do not attempt to use the safety system that includes the Banner Engineering Corp. device and the guarded/controlled machine until the defect or problem has been corrected.


© Banner Engineering Corp. All rights reserved.
www.bannerengineering.com

To prepare the System for this checkout:

1. Examine the guarded machine to verify that it is of a type and design compatible with the EZ-SCREEN Type 2 System. See "Examples: Appropriate Applications" on page 11 for a list of appropriate and inappropriate applications.
2. Verify that the EZ-SCREEN Type 2 is configured for the intended application.
3. Verify that the safety distance (minimum distance) from the closest danger point of the guarded machine to the defined area is not less than the calculated distance, per "Calculating the Safety Distance (Minimum Distance)" on page 19.
4. Verify that:
    a. Access to any dangerous parts of the guarded machine is not possible from any direction not protected by the EZ-SCREEN Type 2 System, a hard (fixed) guard, or supplemental guarding, and
    b. It is not possible for a person to stand between the defined area and the dangerous parts of the machine, or
    c. The supplemental guarding and hard (fixed) guard, as described by the appropriate safety standards, are in place and functioning properly in any space (between the defined area and any hazard point) large enough to allow a person to stand undetected by the EZ-SCREEN Type 2.
5. If used, verify that allreset switches are mounted outside and in full view of the guarded area, out of reach of anyone inside the guarded area, and that means of preventing inadvertent use is in place.
6. Examine the electrical wiring connections between the EZ-SCREEN Type 2 OSSD outputs and the guarded machine's control elements to verify that the wiring meets the requirements stated in "Electrical Connections to the Guarded Machine" on page 40.
7. Inspect the area near the defined area (including work pieces and the guarded machine) for reflective surfaces (see "Adjacent Reflective Surfaces" on page 24). Remove the reflective surfaces by relocating them, painting, masking or roughening them. Remaining problem reflections will become apparent during the Trip Test.
8. Verify that power to the guarded machine is off. Remove all obstructions from the defined area Apply power to the EZ-SCREEN Type 2 System. Manual start/restart output models: Both Alignment indicators will be flashing amber. Perform a manual reset (open the reset switch for 1/4 second, then close it).
9. Observe the Status and Alignment indicators:
    - **Lockout:** Status Blocked flashing red
    - **Blocked:** Status Blocked On red Alignment indicators On, Off, or one of each Status Clear Off
    - **Clear:** Status Clear On green Alignment indicators both On Status Blocked Off
    - **Latch:** (defined Status Blocked On red Alignment indicators flashing amber area clear) Status Clear Off
10. A blocked condition indicates that one or more of the beams is misaligned or interrupted. To correct this situation, see "Optical Alignment" on page 37.
11. After the green and amber Status indicators are on, **perform the trip test** ("Conduct a Trip Test" on page 39) on each sensing field to verify proper System operation and to detect possible optical short circuits or reflection problems. **Do not continue until the EZ-SCREEN Type 2 passes the trip test.**

    **IMPORTANT: Do not expose any individual to any hazard during the following checks.**

    

    **WARNING:**
    - **Clear the guarded area before applying power or resetting the system**
    - Failure to clear the guarded area before applying power could result in serious injury or death.
    - Verify that the guarded area is clear of personnel and any unwanted materials before applying power to the guarded machine or before resetting the system.
12. Apply power to the guarded machine and verify that the machine does not start up.
13. Interrupt (block) the defined area with the suppliedtest piece and verify that it is not possible for the guarded machine to be put into motion while the beam(s) is blocked.
14. Initiate machine motion of the guarded machine and, while it is moving, use the supplied test piece to block the defined area. Do not attempt to insert the test piece into the dangerous parts of the machine. Upon blocking any beam, the dangerous parts of the machine must come to a stop with no apparent delay.
15. Remove the test piece from the beam; verify that the machine does not automatically restart, and that the initiation devices must be engaged to restart the machine.
16. Remove electrical power to the EZ-SCREEN Type 2. Both OSSD outputs should immediately turn Off, and the machine must not be capable of starting until power is re-applied to the EZ-SCREEN Type 2.


© Banner Engineering Corp. All rights reserved.
www.bannerengineering.com

17. Test the machine response time, using an instrument designed for that purpose, to verify that it is the same or less than the overall system response time specified by the machine manufacturer. **Do not continue operation until the entire checkout procedure is complete and all problems are corrected.**


© Banner Engineering Corp. All rights reserved.
www.bannerengineering.com

Chapter Contents

8.1 Troubleshooting and Lockout Conditions ..... 53
8.2 Receiver (System Reset) ..... 53
8.3 Emitter Reset ..... 53
8.4 Electrical and Optical Noise ..... 54

# Chapter 8 Troubleshooting

## 8.1 Troubleshooting and Lockout Conditions

Evaluate status indicators per "Status Indicators" on page 48.

A lockout condition causes all the EZ-SCREEN Type 2 OSSD outputs to turn or remain OFF, sending a stop signal to the guarded machine. Each sensor provides diagnostic information, via the LEDs, to assist in the identification of the cause(s) of lockouts. Lockout conditions are indicated as shown in "Status Indicators" on page 48.

## 8.2 Receiver (System Reset)

To recover from a Lockout condition, correct all errors and perform sensor resets as indicated.

To reset the receiver, open the Reset switch for 0.25 second and then close it, or (for automatic reset reset output models not using a reset button) power the sensor down, wait a second or two, then power it up.

## 8.3 Emitter Reset

To recover from a Lockout condition, correct all errors and perform sensor resets as indicated.

To reset the emitter, power the sensor down, wait a second or two, and then power it up (in the unlikely event that an emitter reset is needed).

**WARNING:**

- **Lockouts and power failures indicate a problem**
- Attempts to continue to operate machinery by bypassing the Banner Engineering Corp. device or other safeguards is dangerous and could result in serious injury or death.
- A Qualified Person[4] must immediately investigate the problem.

**WARNING:**

- **Shut down the machinery before servicing**
- Servicing the Banner Engineering Corp. device or system while the hazardous machinery is operational could result in serious injury or death.
- The machinery to which the Banner Engineering Corp. device or system is connected must not be operating at any time during major service or maintenance. This might require lockout/tagout procedures (refer to OSHA1910.147, ANSI Z244-1, ISO 14118 or the applicable standard for controlling hazardous energy).

[4] A person who, by possession of a recognized degree or certificate of professional training, or who, by extensive knowledge, training and experience, has successfully demonstrated the ability to solve problems relating to the subject matter and work.


© Banner Engineering Corp. All rights reserved.
www.bannerengineering.com

*Table 3. Emitter Troubleshooting*

| Emitter | | |
|---|---|---|
| **Display** | **LED Status** | **Possible Cause and Appropriate Action** |
| Power/Fault | Green flashing | Emitter Failure<br>• Check the power supply for low or erratic voltage, or excessive electrical noise.<br>• Verify the sensor has a good earth ground.<br>If the condition continues, contact Factory. |
| Power/Fault | Green OFF | Power Supply Failure - Check the power supply. |

*Table 4. Receiver Troubleshooting*

| Receiver | | |
|---|---|---|
| **Display** | **LED Status** | **Possible Cause and Appropriate Action** |
| Alignment Top<br>Alignment Bottom<br>Status Blocked<br>Status Clear | Yellow flashing<br>Yellow flashing<br>Red flashing<br>Green OFF | Output Fault<br>• Check output connections.<br>• Check for a short between OSSD1 and OSSD2 or to a secondary source of power.<br>• When connecting to a capacitive load greater than 0.1 µF, contact Factory.<br>• Open Reset/Test for at least 0.25 seconds and close.<br>If the condition continues, contact Factory. |
| Alignment Top<br>Alignment Bottom<br>Status Blocked<br>Status Clear | Yellow flashing<br>Yellow OFF<br>Red flashing<br>Green OFF | Optical Fault<br>• Open Reset/Test for at least 0.25 seconds and close.<br>• Check for optical interference or noise.<br>If the condition continues, contact Factory. |
| Alignment Top<br>Alignment Bottom<br>Status Blocked<br>Status Clear | Yellow OFF<br>Yellow OFF<br>Red flashing<br>Green OFF | Internal Fault<br>• Open Reset/Test for at least 0.25 seconds and close.<br>• Check the power supply for low or erratic voltage, or excessive electrical noise.<br>• Verify the sensor has a good earth ground.<br>If the condition continues, contact Factory. |
| Alignment Top<br>Alignment Bottom<br>Status Blocked<br>Status Clear | Yellow OFF<br>Yellow OFF<br>Red ON<br>Green ON | Reset/Test Input Fault<br>• Reset/Test input open at power-up.<br>• Switch the device OFF, verify the Reset/Test input is connected to +24 V dc (e.g., the reset button or switch is closed) and reapply power. |
| Alignment Top<br>Alignment Bottom<br>Status Blocked<br>Status Clear | Yellow OFF<br>Yellow OFF<br>Red ON<br>Green flashing | Test Mode - Reset/Test input is open. |
| Alignment Top<br>Alignment Bottom<br>Status Blocked<br>Status Clear | Yellow OFF<br>Yellow OFF<br>Red OFF<br>Green OFF | Power Supply Failure - Check power supply. |

# 8.4 Electrical and Optical Noise

If random nuisance Trips or lockouts occur, check the for following:

- Poor connection between the sensor and earth ground
- Optical interference from adjacent light screens or other photoelectrics
- Sensor input or output wires routed too close to noisy wiring

## 8.4.1 Check for Sources of Electrical Noise

It is important that the light screen sensors have a good earth ground. Without this, the System can act like an antenna and random Trips and Lockouts can occur.


© Banner Engineering Corp. All rights reserved.
www.bannerengineering.com

All EZ-SCREEN Type 2 wiring is low voltage; running these wires alongside power wires, motor/servo wires, or other high-voltage wiring can inject noise into the EZ-SCREEN Type 2 System. It is good wiring practice (and may be required by code) to isolate EZ-SCREEN Type 2 wires from high-voltage wires.

1. Use the Banner model BT-1 Beam Tracker Alignment Aid (see "Alignment Aids" on page 62) to detect electrical transient spikes and surges.
2. Cover the lens of the BT-1 with electrical tape to block optical light from entering the receiver lens.
3. Press the RCV button on the BT-1 and position the Beam Tracker on the wires going to the EZ-SCREEN Type 2 or any other nearby wires.
4. Install proper transient suppression across the load to reduce the noise.

### 8.4.2 Check for Optical Noise Sources

Follow these steps to check for optical noise sources.

1. Turn off the emitter, completely block the emitter, or open the Test input.
2. Use a Banner BT-1 Beam Tracker (see "Alignment Aids" on page 62) to check for light at the receiver.
3. Press the RCV button on the BT-1 and move it across the full length of the receiver’s sensing window. If the BT-1’s indicator lights, check for emitted light from other sources (other safety light screens, grids or points, or standard photoelectric sensors).


© Banner Engineering Corp. All rights reserved.
www.bannerengineering.com

Chapter Contents

9.1 Cordsets ..... 56
9.2 Interface Modules ..... 58
9.3 Contactors ..... 59
9.4 Safety Controllers ..... 59
9.5 Lens Shield ..... 59
9.6 EZ-LIGHT for EZ-SCREEN ..... 59
9.7 MSA Series Stands ..... 60
9.8 SSM Series Corner Mirrors ..... 60
9.9 Accessory Mounting Brackets ..... 61
9.10 Alignment Aids ..... 62

# Chapter 9 Accessories

Additional interfacing solutions and accessories continue to be added; refer to http://www.bannerengineering.com for a current list.

## 9.1 Cordsets

### 9.1.1 Single-Ended (Machine Interface) Cordsets

Single-ended (Machine Interface) cordsets (one cable for each emitter and receiver).

Overmold and cables are PVC-jacketed. Cables are unterminated on one end to interface with the guarded machine.

| 8-Pin Single-Ended M12 Female Cordsets | | | | | |
|---|---|---|---|---|---|
| **Model** | **Length** | **Style** | **Dimensions** | **Pinout (Female)** | |
| **QDE-815D** | 4.57 m (15 ft) | Straight | 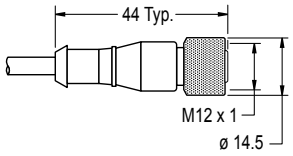 | 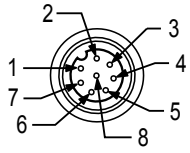 | |
| **QDE-825D** | 7.62 m (25 ft) | | | | |
| **QDE-850D** | 15.24 m (50 ft) | | | | |
| **QDE-875D** | 22.86 m (75 ft) | | | | |
| **QDE-8100D** | 30.48 m (100 ft) | | | 1 = Brown<br>2 = Or/Bk<br>3 = Orange<br>4 = White | 5 = Black<br>6 = Blue<br>7 = Gn/Ye<br>8 = Violet |

| QDE-8..D Pinout/Color Code | | | M12 Specification[5] | | | Connector (female face view) |
|---|---|---|---|---|---|---|
| **Pin** | **Color** | **Function** | **Pin** | **Color** | **Function** | |
| 1 | Bn | +24 V DC | 1 | Wh | +24 V DC | 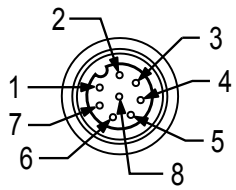 |
| 2 | Or/Bk | n.c. | 2 | Bn | n.c. | |
| 3 | Or | n.c. | 3 | Gn | n.c. | |
| 4 | Wh | OSSD #2 | 4 | Ye | OSSD #2 | |
| 5 | Bk | OSSD #1 | 5 | Gy | OSSD #1 | |
| 6 | Bu | 0 V DC | 6 | Pk | 0 V DC | |
| 7 | Gn/Ye | Gnd/Chassis | 7 | Bu | Gnd/Chassis | |
| 8 | Vi | Reset | 8 | Rd | Reset | |

### 9.1.2 Double-Ended Cables

Double-ended cables are generally used to interconnect with a bulkhead connector (see "Bulkhead Connector" on page 57). They are also useful for extending either the branch or trunk cables of a model CSB splitter cordset (see "Splitter Cordsets" on page 57).

[5] The European M12 Specification pin assignment and color codes are listed for reference only. You must verify the suitability of these cables for each application.


© Banner Engineering Corp. All rights reserved.
www.bannerengineering.com

| 8-Pin Double-Ended M12 Female to M12 Male Cordsets | | | | | |
|---|---|---|---|---|---|
| **Model (8-pin/8-pin )** | **Length** | **Style** | **Dimensions** | **Pinout** | |
| **DEE2R-81D** | 0.3 m (1 ft) | Female Straight/ Male Straight | 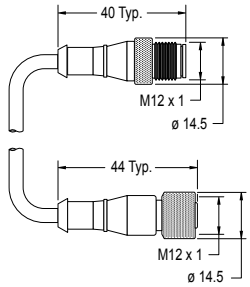 | Female 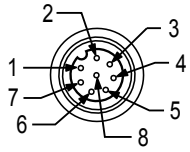 Male 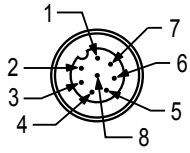 | |
| **DEE2R-82D** | 0.91 m (3 ft) | | | | |
| **DEE2R-88D** | 2.44 m (8 ft) | | | | |
| **DEE2R-815D** | 4.57 m (15 ft) | | | | |
| **DEE2R-825D** | 7.62 m (25 ft) | | | | |
| **DEE2R-850D** | 15.24 m (50 ft) | | | | |
| **DEE2R-875D** | 22.86 m (75 ft) | | | | |
| **DEE2R-8100D** | 30.48 m (100 ft) | | | 1 = Brown<br>2 = Orange/Black<br>3 = Orange<br>4 = White | 5 = Black<br>6 = Blue<br>7 = Green/Yellow<br>8 = Violet |

## 9.1.3 Bulkhead Connector

Connector for panel connection of EZ-SCREEN Type 2 component cables.

| Model | Connection | Dimensions |
|---|---|---|
| **PMEF-810D** | 8-pin M12 female connector 3 m (10 ft) wires, cut to length (Banner color code); 22 AWG/0.33 mm² | 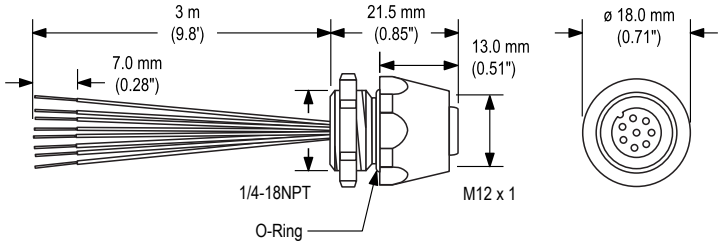 |

## 9.1.4 Splitter Cordsets

Model CSB splitter cordsets allow easy interconnection between an EZ-SCREEN Type 2 8-pin receiver and its 8-pin emitter, providing a single homerun cable for the optional swapable connection. The model DEE2R-.. double-ended cables described on page 8 may be used to extend the lengths of the QD trunk, branch #1, or branch #2. Branch #1 and branch #2 cable sections are 300 mm/1 ft long. The model QDE-8..D single-ended cables may be used to extend the QD trunk for cut-to-length applications.


© Banner Engineering Corp. All rights reserved.
www.bannerengineering.com

| 8-Pin M12 Female Branch to Male Trunk Flat Junction Splitter Cordsets | | | |
|---|---|---|---|
| **Model** | **Trunk (Male)** | **Branches (Female)** | **Pinout** |
| **CSB-M1280M1280** | No trunk | No branches | Male 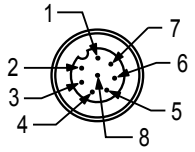  |
| **CSB-M1281M1281** | 0.3 m (1 ft) | 2 x 0.3 m (1 ft) | |
| **CSB-M1288M1281** | 2.44 m (8 ft) | | |
| **CSB-M12815M1281** | 4.57 m (15 ft) | | |
| **CSB-M12825M1281** | 7.62 m (25 ft) | | |
| **CSB-UNT825M1281** | 7.62 m (25 ft) Unterminated | | |
| 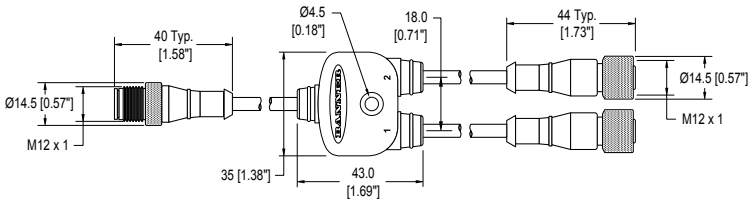  | | | Female 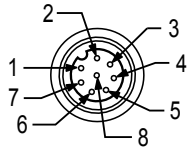  1 = Brown 2 = Or/Bk 3 = Orange 4 = White 5 = Black 6 = Blue 7 = Gn/Ye 8 = Violet |

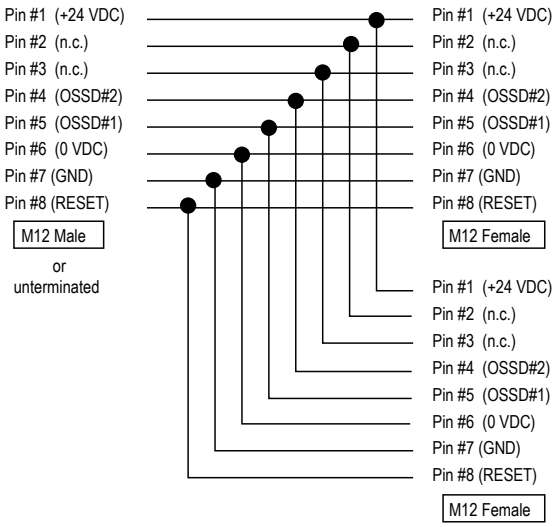


# 9.2 Interface Modules

Interface modules provide forced-guided, mechanically-linked relay (safety) outputs for the EZ-SCREEN Type 2 System The interface module is required to be monitored by the EDM function (see "Generic Wiring — Interface Module (2-Channel EDM, Manual Reset)" on page 46).

| Model | Description | Datasheet |
|---|---|---|
| **IM-T-9A** | Interface module, 3 normally open (N.O.) redundant-output 6 amp contacts, removable screw terminals | 62822 |
| **IM-T-11A** | Interface module, 2 normally open (N.O.) redundant-output 6 amp contacts, plus 1 normally closed (N.C.) auxiliary contact, removable screw terminals | |
| **SR-IM-9A** | Interface module, 3 normally open (N.O.) redundant-output 6 amp contacts, spring clamp terminals | 208873 |
| **SR-IM-11A** | Interface module, 2 normally open (N.O.) redundant-output 6 amp contacts, plus 1 normally closed (N.C.) auxiliary contact, spring clamp terminals | |


© Banner Engineering Corp. All rights reserved.
www.bannerengineering.com

## 9.3 Contactors

Contactors provide forced-guided, mechanically-linked relay (safety) outputs for the EZ-SCREEN Type 2 System. The contactor is required to be monitored via an EDM function (See "Generic Wiring to FSDs (manual reset)" on page 45).

| Model | Description |
|---|---|
| **11-BG00-31-D-024** | 10 amp positive-guided contactor, 3 normally open (N.O.) and 1 normally closed (N.C.) |
| **BF1801L024** | 18 amp positive-guided contactor, 3 normally open (N.O.) and 1 normally closed (N.C.) (N.C. contact rated at 10 amps) |

## 9.4 Safety Controllers

Safety Controllers provide a fully configurable, software-based safety logic solution for monitoring safety and non-safety devices.

For additional models and XS26 expansion modules, see instruction manual p/n 174868.

*Table 5. Safety controller models*

| Non-Expandable Models | Expandable Models | Description |
|---|---|---|
| **SC26-2** | **XS26-2** | 26 convertible I/O and 2 redundant solid-state safety outputs |
| **SC26-2d** | **XS26-2d** | 26 convertible I/O and 2 redundant solid-state safety outputs with display |
| **SC26-2e** | **XS26-2e** | 26 convertible I/O and 2 redundant solid-state safety outputs with Ethernet |
| **SC26-2de** | **XS26-2de** | 26 convertible I/O and 2 redundant solid-state safety outputs with display and Ethernet |
| **SC10-2roe** | | 10 inputs, 2 redundant relay safety outputs (3 contacts each) (ISD and Ethernet compatible) |
| | **XS26-ISDd** | 26 inputs, 2 redundant solid-state safety outputs with display, Ethernet, and 8 ISD channels |

## 9.5 Lens Shield

Constructed of 1.5 mm (0.06 in) clear polycarbonate; attach to the sensor using supplied adhesive-backed Neoprene foam strips.

**NOTE:** The total range decreases by approximately 10% per shield.

| Lens Shield Model | Sensor Defined Area Height | Lens Shield Length | |
|---|---|---|---|
| **LSS-150** | 150 mm (5.9 in) | 210 mm (8.3 in) |  |
| **LSS-300** | 300 mm (11.8 in) | 360 mm (14.2 in) | |
| **LSS-450** | 450 mm (17.7 in) | 510 mm (20.1 in) | |
| **LSS-600** | 600 mm (23.6 in) | 660 mm (26.0 in) | |
| **LSS-750** | 750 mm (29.5 in) | 810 mm (31.9 in) | |
| **LSS-900** | 900 mm (35.4 in) | 959 mm (37.8 in) | |
| **LSS-1050** | 1050 mm (41.3 in) | 1109 mm (43.7 in) | |
| **LSS-1200** | 1200 mm (47.2 in) | 1259 mm (49.6 in) | |
| **LSS-1350** | 1350 mm (53.1 in) | 1409 mm (55.5 in) | |
| **LSS-1500** | 1500 mm (59.1 in) | 1558 mm (61.3 in) | |

## 9.6 EZ-LIGHT for EZ-SCREEN

Provides clear, 360° indication of the of the EZ-SCREEN receiver's output status. Use with a CSB splitter cable and optional DEE2R double-ended cables. See datasheet p/n 121901 for more information.


© Banner Engineering Corp. All rights reserved.
www.bannerengineering.com

| Models | | Construction | Connector/LED Function/Inputs |
|---|---|---|---|
|  | **K30LRGX8PQ8** | Polycarbonate housing, 30 mm thermoplastic dome, 22 mm base mount<br>Fully encapsulated, IP67 | 8-pin M12 Integral QD<br><br>Red/Green indication follows OSSD output of the EZ-SCREEN receiver<br><br>**ON Red:**—Power ON Beam Blocked or Lockout<br><br>**ON Green:**—Power ON Beam Clear<br><br>PNP (Sourcing) |
|  | **K50LRGX8PQ8** | Polycarbonate housing, 50 mm thermoplastic dome, 30 mm base mount<br>Fully encapsulated, IP67 | |

# 9.7 MSA Series Stands

- Provides mounting T-slots with 20 mm dimension between slots
- Base included. Available without a base by adding the suffix **NB** to the model number (for example, **MSA-S42-1NB**)

| Stand Model | Pole Height | Useable Stand Height | Overall Stand Height | |
|---|---|---|---|---|
| **MSA-S24-1** | 610 mm (24 in) | 483 mm (19 in) | 616 mm (24.25 in) | 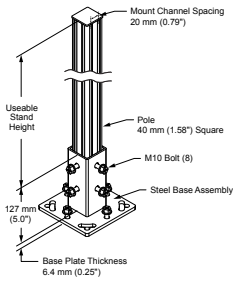 |
| **MSA-S42-1** | 1065 mm (42 in) | 938 mm (37 in) | 1071 mm (42.2 in) | |
| **MSA-S66-1** | 1676 mm (66 in) | 1549 mm (61 in) | 1682 mm (66.25 in) | |
| **MSA-S84-1** | 2134 mm (84 in) | 2007 mm (79 in) | 2140 mm (84.25 in) | |
| **MSA-S105-1** | 2667 mm (105 in) | 2540 mm (100 in) | 2673 mm (105.25 in) | |

# 9.8 SSM Series Corner Mirrors

- Robust for heavy-duty applications.
- Extra wide for use with long-range optical safety systems.
- Rear-surface glass mirrors are rated at 85% efficiency. The total sensing range decreases by approximately 8% per mirror. See mirror datasheet p/n 61934 or www.bannerengineering.com for further information.
- To order the stainless steel reflective surface models, add the suffix **-S** (for example, **SSM-375-S**); range reduction for these models is approximately 30% per mirror. See datasheet p/n 67200.
- Robust construction, two mounting brackets and hardware included.
- In addition to the included SMA-MBK-1 brackets, an EZA-MBK-2 adapter bracket kit is required for use with MSA Series stands; refer to the mounting bracket accessories list.
- Brackets may be inverted from the positions shown, decreasing dimension L1 by 58 mm (2.3 in).


© Banner Engineering Corp. All rights reserved.
www.bannerengineering.com

| Mirror Model | Reflective Area Length (Y) | Mounting Height (L1)[6] | Overall Height (L2) | Max. Light Screen Defined Area Height |
|---|---|---|---|---|
| **SSM-100** | 100 mm (3.9 in) | 211 mm (8.3 in) | 178 mm (7.0 in) | 50 mm (1.9 in) |
| **SSM-200** | 200 mm (7.9 in) | 311 mm (12.2 in) | 278 mm (10.9 in) | 150 mm (5.9 in) |
| **SSM-375** | 375 mm (14.8 in) | 486 mm (19.1 in) | 453 mm (17.8 in) | 325 mm (12.8 in) |
| **SSM-475** | 475 mm (18.7 in) | 586 mm (23.1 in) | 553 mm (21.8 in) | 425 mm (16.7 in) |
| **SSM-550** | 550 mm (21.7 in) | 661 mm (26.0 in) | 628 mm (24.7 in) | 500 mm (19.7 in) |
| **SSM-675** | 675 mm (26.6 in) | 786 mm (31.0 in) | 753 mm (29.6 in) | 625 mm (24.6 in) |
| **SSM-825** | 825 mm (32.5 in) | 936 mm (36.9 in) | 903 mm (35.6 in) | 775 mm (30.5 in) |
| **SSM-875** | 875 mm (34.4 in) | 986 mm (38.8 in) | 953 mm (37.5 in) | 825 mm (32.5 in) |
| **SSM-975** | 975 mm (38.4 in) | 1086 mm (42.8 in) | 1053 mm (41.5 in) | 925 mm (36.4 in) |
| **SSM-1100** | 1100 mm (43.3 in) | 1211 mm (47.7 in) | 1178 mm (46.4 in) | 1050 mm (41.3 in) |
| **SSM-1175** | 1175 mm (46.3 in) | 1286 mm (50.6 in) | 1253 mm (49.3 in) | 1125 mm (44.3 in) |
| **SSM-1275** | 1275 mm (50.2 in) | 1386 mm (54.6 in) | 1353 mm (53.3 in) | 1225 mm (48.2 in) |
| **SSM-1400** | 1400 mm (55.1 in) | 1511 mm (59.5 in) | 1478 mm (58.2 in) | 1350 mm (53.1 in) |
| **SSM-1475** | 1475 mm (58.1 in) | 1586 mm (62.5 in) | 1553 mm (61.1 in) | 1425 mm (56.1 in) |
| **SSM-1550** | 1550 mm (61.0 in) | 1661 mm (65.4 in) | 1628 mm (64.1 in) | 1500 mm (59.1 in) |
| **SSM-1675** | 1675 mm (65.9 in) | 1786 mm (70.3 in) | 1753 mm (69.0 in) | 1625 mm (63.9 in) |
| **SSM-1750** | 1750 mm (68.9 in) | 1861 mm (73.3 in) | 1828 mm (72.0 in) | 1700 mm (66.9 in) |
| **SSM-1900** | 1900 mm (74.8 in) | 2011 mm (79.2 in) | 1978 mm (77.9 in) | 1850 mm (72.8 in) |

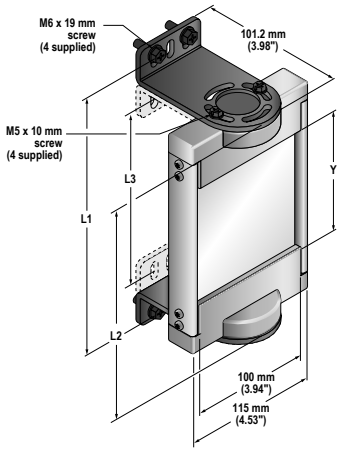


| SSM Models | Light Curtain Series | | | | | |
|---|---|---|---|---|---|---|
| | SLS | S4B | LP | LS | Type 2 | SGS |
| **SSM-100** | | | | | | |
| **SSM-200** | 150 | | | | 150 | |
| **SSM-375** | 300 | 300 | 270 | 280 | 300 | |
| **SSM-475** | | | 410 | 350/420 | | |
| **SSM-550** | 450 | 450 | | 490 | 450 | 2–500 |
| **SSM-675** | 600 | 600 | 550 | 560/630 | 600 | |
| **SSM-825** | 750 | 750 | 690 | 700/770 | 750 | |
| **SSM-875** | | | 830 | 840 | | 3–400 |
| **SSM-975** | 900 | 900 | | 910 | 900 | 4–300 |
| **SSM-1100** | 1050 | 1050 | 970 | 980/1050 | 1050 | |
| **SSM-1175** | | | 1110 | 1120 | | |
| **SSM-1275** | 1200 | 1200 | | 1190 | 1200 | 4–400 |
| **SSM-1400** | 1350 | 1350 | 1250 | 1260/1330 | 1350 | |
| **SSM-1475** | | | 1390 | 1400 | | |
| **SSM-1550** | 1500 | 1500 | | 1470 | 1500 | |
| **SSM-1675** | | | 1530 | 1540/1610 | | |
| **SSM-1750** | 1650 | 1650 | 1670 | 1680 | | |
| **SSM-1900** | 1800 | 1800 | 1810 | 1750/1820 | | |

# 9.9 Accessory Mounting Brackets

See "Bracket Dimensions" on page 13 for standard brackets. Contact the factory for more information. Order one USMB- or USCMB- bracket per sensor, two per pair.

[6] The mounting brackets may be inverted from the positions shown at left (flanges pointing “inward” instead of “outward,” as shown). When this is done, dimension L1 decreases by 58 mm (2.3 inches).


© Banner Engineering Corp. All rights reserved.
www.bannerengineering.com

**USMB-8**
- Mounting plate for 90° sensor direction
- Low profile
- Black anodized aluminum
- Uses two M4 screws (user supplied) for through-hole mounting
- One kit is required per emitter or receiver

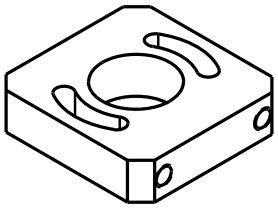

**EZA-MBK-2**
- Adapter bracket for mounting SSM series mirror to MSA series stands

**Hole center spacing:** A = 63.9, B = 19.9, A to B = 22.0
**Hole size:** A = ø 8.3, B = ø 4.8

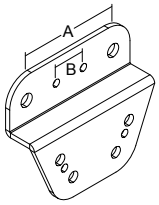


# 9.10 Alignment Aids

| Model | Description | |
|---|---|---|
| **LAT-1-LS** | Self-contained visible-beam laser tool for aligning any EZ-SCREEN Type 2 emitter/receiver pair. Includes retroreflective target material and mounting clip. | 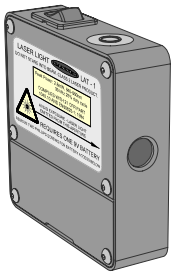 |
| **LSA-LAT-2** | Replacement adaptor (clip) hardware for EZ-SCREEN Type 2 models | |
| **LSA-LAT-1** | Clip-on retroreflective LAT target | |
| **BRT-THG-2-100** | 2 inch retroreflective tape, 100 ft | |
| **BT-1** | Beam Tracker | |


© Banner Engineering Corp. All rights reserved.
www.bannerengineering.com

Chapter Contents

10.1 Clean Components with Mild Detergent ..... 63
10.2 Warranty Service ..... 63
10.3 EZS Type 2 Replacement Parts ..... 63
10.4 Disposal ..... 63
10.5 Manufacturing Date ..... 63
10.6 Documentation ..... 64
10.7 Contact Us ..... 64
10.8 Banner Engineering Corp Limited Warranty ..... 64

# Chapter 10 Product Support and Maintenance

## 10.1 Clean Components with Mild Detergent

Components are best cleaned using mild detergent or window cleaner and a soft cloth. Avoid cleaners containing alcohol, as they may damage the acrylic lens covers.

## 10.2 Warranty Service

Contact Banner Engineering for troubleshooting of this device. **Do not attempt any repairs to this Banner device; it contains no field-replaceable parts or components.** If the device, device part, or device component is determined to be defective by a Banner Applications Engineer, they will advise you of Banner's RMA (Return Merchandise Authorization) procedure.

> **IMPORTANT:** If instructed to return the device, pack it with care. Damage that occurs in return shipping is not covered by warranty.

## 10.3 EZS Type 2 Replacement Parts

| Model Number | Description | |
|---|---|---|
| **MGA-KSO-1** | Keyed reset switch | |
| **MGA-K-1** | Replacement key | |
| **STP-14** | 30 mm (1.2 in) test piece | |
| **USMB-10** | Standard end bracket kit with hardware (includes 2 end brackets and hardware to mount to MSA Series stands. | |
| **USCMB-4** | Center bracket kit (includes bracket(s) and hardware to mount to MSA Series stands | One bracket, for 600–900 mm (23.6–35.4 in) long sensors |
| **USCMB-5** | | Two brackets, for 1050–1350 mm (41.3–53.1 in) long sensors |
| **USCMB-6** | | Three brackets, for 1500 mm (59.1 in) long sensors |

## 10.4 Disposal

Devices that are no longer in use should be disposed of according to the applicable national and local regulations.

## 10.5 Manufacturing Date

Every EZ-SCREEN Type 2 produced is marked with a code that defines the week and year of manufacture and manufacturing location. The code format (U.S. Standard format) is: **YYWWL**

- YY = Year of manufacture, 2 digits
- WW = Week of manufacture, 2 digits
- L = Banner-specific code, 1 digit

**Example**: 2309H = 2023, Week 9.


© Banner Engineering Corp. All rights reserved.
www.bannerengineering.com

## 10.6 Documentation

| Part Number | Description |
|---|---|
| 122452 | EZ-SCREEN Type 2 System Instruction Manual |
| 122450 | Checkout Procedure Card (Daily) |
| 122451 | Checkout Procedure Card (Semi-Annual) |

## 10.7 Contact Us

Banner Engineering Corp. headquarters is located at: 9714 Tenth Avenue North | Plymouth, MN 55441, USA | Phone: + 1 888 373 6767

For worldwide locations and local representatives, visit www.bannerengineering.com.

## 10.8 Banner Engineering Corp Limited Warranty

Banner Engineering Corp. warrants its products to be free from defects in material and workmanship for one year following the date of shipment. Banner Engineering Corp. will repair or replace, free of charge, any product of its manufacture which, at the time it is returned to the factory, is found to have been defective during the warranty period. This warranty does not cover damage or liability for misuse, abuse, or the improper application or installation of the Banner product.

**THIS LIMITED WARRANTY IS EXCLUSIVE AND IN LIEU OF ALL OTHER WARRANTIES WHETHER EXPRESS OR IMPLIED (INCLUDING, WITHOUT LIMITATION, ANY WARRANTY OF MERCHANTABILITY OR FITNESS FOR A PARTICULAR PURPOSE), AND WHETHER ARISING UNDER COURSE OF PERFORMANCE, COURSE OF DEALING OR TRADE USAGE.**

This Warranty is exclusive and limited to repair or, at the discretion of Banner Engineering Corp., replacement. **IN NO EVENT SHALL BANNER ENGINEERING CORP. BE LIABLE TO BUYER OR ANY OTHER PERSON OR ENTITY FOR ANY EXTRA COSTS, EXPENSES, LOSSES, LOSS OF PROFITS, OR ANY INCIDENTAL, CONSEQUENTIAL OR SPECIAL DAMAGES RESULTING FROM ANY PRODUCT DEFECT OR FROM THE USE OR INABILITY TO USE THE PRODUCT, WHETHER ARISING IN CONTRACT OR WARRANTY, STATUTE, TORT, STRICT LIABILITY, NEGLIGENCE, OR OTHERWISE.**

Banner Engineering Corp. reserves the right to change, modify or improve the design of the product without assuming any obligations or liabilities relating to any product previously manufactured by Banner Engineering Corp. Any misuse, abuse, or improper application or installation of this product or use of the product for personal protection applications when the product is identified as not intended for such purposes will void the product warranty. Any modifications to this product without prior express approval by Banner Engineering Corp will void the product warranties. All specifications published in this document are subject to change; Banner reserves the right to modify product specifications or update documentation at any time. Specifications and product information in English supersede that which is provided in any other language. For the most recent version of any documentation, refer to: www.bannerengineering.com.

For patent information, see www.bannerengineering.com/patents.


© Banner Engineering Corp. All rights reserved.
www.bannerengineering.com

# Index


## A

applications
  inappropriate 11
  suitable 11
automatic start 16
adjacent reflective surfaces 24
accessories
  safety controller 59

## C

checkout
  initial 35
  schedule of 50
  commissioning 50
control reliability 15
corsets
  routing 33
calculating safety distance 19
corner mirrors 25

## D

dual-channel control 41
distance
  minimum 19

## E

emitter
  power/fault indicator 48
  orientation 26
electrical noise 54
external device monitoring (EDM) 16
electrical connections 34, 40
emitter reset 53

## F

FSD 41
final switching devices 41
final switching device (FSD) 8

## H

hazards
  reducing 22

## I

indicators
  emitter power/fault 48
  receiver 48
  receiver 48
inappropriate applications 11
initial power-up 36
installation
  mechanical 19
  electrical 33

## L

LEDs
  emitter 48
  receiver 48
latch output 16, 16

## M

minimum distance 19
mirrors
  optical alignment 38
machine primary control elements (MPCEs) 8
manual start 16
multiple systems 27

## N

noise
  optical 54
  electrical 54

## O

optical noise 54
optical alignment with mirrors 38
output signal switching device (OSSD) 8
orientation 26, 27

## P

protective stop circuit 41

## R

routing corsets 33
reset procedure 47
reset switch location 47, 23
receiver indicators 48, 48
receiver reset 53
reset 53, 53
reflective surfaces 24
receiver
  orientation 26



© Banner Engineering Corp. All rights reserved.
www.bannerengineering.com

## S

status indicators 48, 18
safety stop circuit 41
single-channel control 42
system reset 53, 53
system response time 9
suitable applications 11
sensor swapability 16
safety distance 19
supplemental safeguarding 22
safety controller 59

## T

troubleshooting
  lockout conditions 53
trip output 16, 16


© Banner Engineering Corp. All rights reserved.
www.bannerengineering.com

# Glossary

### ANSI

The American National Standards Institute (ANSI) is an association of industry representatives that develops technical standards (including safety standards). These standards comprise a consensus from a variety of industries on good practice and design. ANSI standards relevant to the application of safety products include the ANSI B11 Series, and ANSI/RIA R15.06.

### auto start/restart (trip) condition

An auto start/restart condition is when the safety outputs of a safety light curtain system turn off after an object completely blocks a beam and re-energize when the object is removed from the defined area.

### automatic reset

An automatic reset is the safety input device control operation setting where the assigned safety output automatically turns on when all of its associated input devices are in the Run state. No manual reset operation is required for the safety output to turn on when controlled only by safety input devices configured for automatic reset. When automatic reset is selected, the input device may be said to be configured to run in auto start/restart mode.

### blocked condition

A block condition occurs when an opaque object of sufficient size blocks/interrupts one or more light curtain beams. When a blocked condition occurs, OSSD1 and OSSD2 outputs simultaneously turn off within the system response time.

### control reliability

Control reliability is a method of ensuring the performance integrity of a control system or device. Control circuits are designed and constructed so that a single failure or fault within the system does not prevent the normal stopping action from being applied to the machine when required, or does not create unintended machine action, but does prevent initiation of successive machine action until the failure is corrected.

### defined area

The defined area is the "screen of light" generated by a safety light curtain system that is defined by the height and the safety distance (minimum distance) of the system.

### Designated Person

A Designated Person is a person or persons identified and designated in writing, by the employer, as being appropriately trained and qualified to perform a specified checkout procedure.

### dual-channel

A dual-channel device or configuration has redundant signal lines for each safety input or safety output.

### emitter

light curtain The light curtain's emitter is the light-emitting component of a safety light curtain system, consisting of a row of synchronized modulated LEDs. The emitter, together with the receiver (placed opposite), creates a "screen of light" called the defined area.

### external device monitoring

External device monitoring (EDM) is a means by which a safety device (such as a safety light curtain) actively monitors the state (or status) of external devices that may be controlled by the safety device. A lockout of the safety device will result if an unsafe state is detected in the external device. External device(s) may include, but are not limited to: MPCEs, captive contact relays/contactors, and safety modules.


© Banner Engineering Corp. All rights reserved.
www.bannerengineering.com

### failure mode and effects analysis

Failure mode and effects analysis (FMEA) is a testing procedure by which potential failure modes in a system are analyzed to determine their results or effects on the system. Component failure modes that produce either no effect or a Lockout condition are permitted; failures that cause an unsafe condition (a failure to danger) are not. Banner safety products are extensively FMEA tested.

### final switching device

A final switching device (FSD) is the component of the machine's safety-related control system that interrupts the circuit to the machine primary control element (MPCE) when the output signal switching device (OSSD) goes to the OFF-state.

### guarded machine

A guarded machine is the machine whose point of operation is guarded by the safety system.

### hard (fixed) guard

Hard (fixed) guards are screens, bars, or other mechanical barriers affixed to the frame of the machine intended to prevent entry by personnel into the hazardous area(s) of a machine, while allowing the point of operation to be viewed. The maximum size of the openings is determined by the applicable standard, such as Table O-10 of OSHA 29CFR1910.217, also called a "fixed barrier guard."

### hazard point

A hazard point is the closest reachable point of the hazardous area.

### hazardous area

The hazardous area is an area that poses an immediate or impending physical hazard.

### key reset (manual reset)

A key reset is a key-operated switch used to reset a safety light curtain system to Run mode following a lockout condition, or to enable machine operation following a manual start/restart (latch) condition. Key reset also refers to the act of using the key-operated switch.

### lockout condition

A lockout condition is a safety light curtain condition that is automatically attained in response to certain failure signals. When a lockout condition occurs, the safety light curtain's safety outputs turn off; the failure must be corrected and a manual reset is required to return the system to run mode.

### machine primary control element

A machine primary control element (MPCE) is an electrically powered element, external to the safety system, that directly controls the machine's normal operating motion in such a way that the element is last (in time) to operate when the machine motion is either initiated or arrested.

### machine response time

The machine response time is the time between the activation of a machine-stopping device and the instant when the dangerous parts of the machine reach a safe state by being brought to rest.

### manual reset

A manual reset is the safety input device control operation setting where the assigned safety output turns on only after a manual reset is performed and if the other associated input devices are in their run state. When manual reset is selected, the input device may be said to be configured to run in manual start/restart (latch) mode; meaning that the controlled output has latched to the off state and requires a manual reset to turn back on. This reset is sometimes called a manual latch reset.

### manual start/restart (latch)

Manual start/restart (latch) is when the safety outputs of a safety light curtain system turn off when an object completely blocks a beam. In a manual start/restart condition, the safety outputs stay off when the object is removed from the defined area. To re-energize the outputs, perform a proper manual reset.


© Banner Engineering Corp. All rights reserved.

### output signal switching device

The output signal switching devices (OSSD) are the safety outputs that are used to initiate a stop signal.

### pass-through hazard

A pass-through hazard is associated with applications where personnel may pass through a safeguard (which issues a stop command to remove the hazard), and then continues into the guarded area, such as in perimeter guarding. Subsequently, their presence is no longer detected, and the related danger becomes the unexpected start or restart of the machine while personnel are within the guarded area.

### point-of-operation guarding

Point-of-operation guarding are safeguards, such as hard guards or safety light curtains, that are designed to protect personnel from hazardous machine motion when close to the machine’s point of operation.

### Qualified Person

A Qualified Person is a person who, by possession of a recognized degree or certificate of professional training, or who, by extensive knowledge, training and experience, has successfully demonstrated the ability to solve problems relating to the subject matter and work.

### receiver

light curtains The receiver is the light-receiving component of a safety light curtain system and consists of a row of synchronized phototransistors. The receiver, together with the emitter (placed opposite), creates a "screen of light" called the defined area.

### reset

A reset refers to the use of a manually operated switch to restore the safety outputs to the ON state from a lockout or a manual start/restart (latch) condition.

### safety distance

The safety distance is the minimum distance required to allow the machine’s hazardous motion to stop completely before a hand (or other object) can reach the nearest hazard point. The safety distance is measured from the midpoint of the defined area to the nearest hazard point. Factors that influence minimum separation distance include the machine stop time, the light curtain system response time, and the light curtain minimum object detection size.

### single-channel

Single-channel refers to having only one signal line for a safety input or safety output.

### stop signal

The stop signal is the input signal monitored by the controller that, when detected, causes one or more safety outputs to turn off. In this manual, either the input device or device signal is said to be in the stop state.

### supplemental guarding

Supplemental guarding is additional safeguarding device(s) or hard guarding, used to prevent a person from reaching over, under, through or around the primary safeguard or otherwise accessing the guarded hazard.

### test piece

A test piece is an opaque object of sufficient size used to block a light beam to test the operation of a safety light curtain system. When inserted into the defined area and placed in front of a beam, the test piece causes the outputs to de-energize.


© Banner Engineering Corp. All rights reserved.

LinkedIn

X (formerly Twitter)

Facebook




© 2025. All rights reserved.
www.bannerengineering.com