Features

Registration Mark Sensor with Three-Color Light Source



- Ultra-fast 10 kHz switching frequency
- Sensor automatically selects red, green, or blue LED during TEACH to optimize application contrast
- Outstanding color contrast sensitivity; detects 16 levels of gray scale
- Smart gain-control algorithm to maximize performance in low-contrast or high-gloss applications
- Easy to set, automatic *Expert*-style TEACH options include Static and Dynamic programming, plus manual adjustment for fine-tuning
- Easy-to-read 8-segment light bar indicator for TEACH and signal strength readout, plus indicators for continuous readout of output status and setup
- Fixed-convergent sensing at 10 mm ±3 mm (0.39 in ±0.12 in); rectangular sensing image measures 1.2 mm x 3.8 mm (0.05 in x 0.15 in) at 10 mm (0.39 in) from the lens
- Models are available with either parallel or perpendicular sensing images
- Rugged zinc alloy die-cast housing with a high-quality acrylic lens suitable for food processing applications
- Easy selection of Light/Dark Operate (LO/DO), 30 ms pulse stretcher (OFF-delay), and 30 ms ON-delay, using the push buttons or a remote input wire

WARNING:

- **Do not use this device for personnel protection**
- Using this device for personnel protection could result in serious injury or death.
- This device does not include the self-checking redundant circuitry necessary to allow its use in personnel safety applications. A device failure or malfunction can cause either an energized (on) or de-energized (off) output condition.

Models

Models	Cable	Focus	Sensing Image Orientation
R58ECRGB1	5-wire 2 m (6.5 ft)	10 mm (0.39 in)	Parallel to sensor length 
R58ECRGB1Q8	5-pin M12 integral QD		
R58ECRGB1Q	5-pin M12 150 mm QD		
R58ECRGB2	5-wire 2 m (6.5 ft)		Perpendicular to sensor length 
R58ECRGB2Q8	5-pin M12 integral QD		
R58ECRGB2Q	5-pin M12 150 mm QD		

Models with a quick disconnect require a mating cordset.

The following models are no longer available for order but are still covered by the information in this document.

- R58ECRGB1 W/30 (9 m cable)
- R58ECRGB2 W/30 (9 m cable)

Original Instructions
12-Jun-26

© Banner Engineering Corp. All rights reserved.
www.bannerengineering.com

122928
p/n: 122928 Rev. F

ПРОМЭЛЕКТРОНИКА/ sales@prom-elec.com

Overview

R58E sensors offer maintenance-free, solid-state reliability for typical color contrasts found in product and material registration applications. Fast 50-microsecond sensing response produces excellent registration repeatability, even in ultra-high-speed applications. This fast response, coupled with the small 1.2 × 3.8 mm (0.05 in × 0.15 in) sensing image, allows the detection of small and inconspicuous registration marks.

Sensor Features

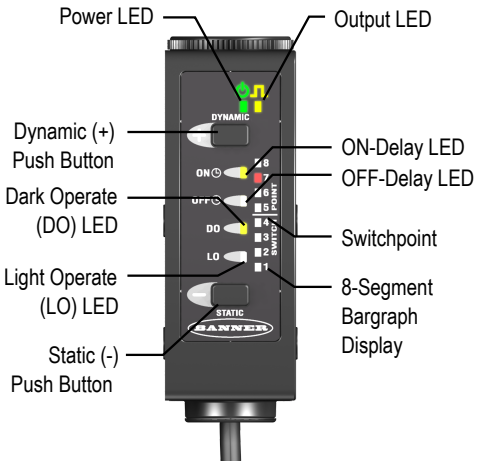

R58E sensors feature TEACH mode sensitivity adjustment by presenting two sensing conditions to the sensor. TEACH mode has two options: Static TEACH and Dynamic TEACH. Static TEACH is used to position the two sensing conditions individually. Dynamic TEACH provides a means for teaching a series of conditions on-the-fly; the R58E samples the sensing events and automatically sets the switchpoint between the lightest and darkest conditions. The sensor then determines which sensing condition is present for the shortest time and assigns the Output ON condition to that event (therefore, LO/DO selection is automatic). If necessary, the LO/DO setting can be reversed in Setup mode.

The sensor uses a tri-color LED during either teach process and automatically selects a red, green, or blue sensing beam, based on the contrast between the registration mark and its background. For applications where the user wishes to select the sensing beam color, individual colors may be enabled/disabled in Setup mode.

Sensitivity may be fine-tuned at any time by clicking the “+” or “-” buttons on the sensor. The eight-element barograph display clearly displays the relative received signal strength. The discrete bipolar (one NPN and one PNP) outputs may be configured in Setup mode to include a 30-millisecond ON-delay and/or OFF-delay, if required.

Configuration is accomplished either by using the push-buttons on the sensor or by supplying input pulses using the remote input. The buttons may be disabled using the remote input.

The construction of the R58E is extremely robust, with a die-cast metal housing, plastic optics, and IP67 leakproof design for harsh sensing environments.

Status Indicators

LED	Indicates
Power	On Green: Run mode Off: TEACH or Setup mode
Output	On Amber: Output is conducting, or TEACH Output ON condition Off: Output is not conducting, or TEACH Output OFF condition
Light Operate	On Green: Light Operate (LO) operation
Dark Operate	On Green: Dark Operate (DO) operation
OFF-Delay	On Green: 30 ms pulse stretcher (OFF-delay) is active Off: No OFF-delay
ON-Delay	On Green: 30 ms ON-delay is active Off: No ON-delay
8-Segment Bargraph Display	On Red: Run mode — Indicates signal strength with respect to the sensing threshold (switchpoint); higher segment number for higher sensing contrast TEACH mode — Indicates relative contrast Setup mode — Displays sensing beam LED color (see "Figure: LED Color Configuration Options" on page 7) Off: TEACH or Setup mode — Sensor configuration active

In light operate (LO) mode, the output is ON when the target returns the same or more light to the sensor and OFF when the sensor detects less light than the configured/taught target. In **opposed and retroreflective sensing modes**, light operate is active when the beam is unblocked. In **diffuse, fixed field, and adjustable field sensor modes**, light operate is active when the target is present.

In dark operate (DO) mode, the output is ON when the target returns less light to the sensor than the configured target and OFF when the sensor detects more light than the configured/taught target. In **opposed and retroreflective sensing modes**, dark operate is active when the beam is blocked. In **diffuse, fixed field, and adjustable field sensor modes**, dark operate is active when the target is absent.

© Banner Engineering Corp. All rights reserved.
www.bannerengineering.com

Installation

Install the Lens

The lens may be installed at either of two lens ports (see "Figure: Mounting Distance and Lens Positions" on page 3). The lens and the lens port cap are both threaded and may be exchanged by hand; no tools are required. The lens and cap both include an o-ring seal.

> **NOTE:** The lens port cap must be installed on the unused port for reliable operation. Fully seat the lens cap to ensure a liquid-tight seal.

Mounting Considerations

The R58E Expert Series Registration Mark Sensor includes a total of eight size M5 threaded holes used for mounting. These threaded holes are positioned to match the mounting hole patterns common to other registration mark sensors. The R58E includes four M5 x 0.8 x 6 mm stainless steel cap screws and a hex key wrench.

The R58E focus is 10 mm (0.39 in) from the lens surface. The R58E must be mounted within 3 mm (0.12 in) of this distance from the surface of the material for reliable sensing ("Figure: Mounting Distance and Lens Positions" on page 3).

Consider the following when mounting the R58E:

- When sensing a registration mark on a reflective (shiny) material, mount the R58E at an angle that places the lens centerline at approximately 15° off perpendicular to the material's surface ("Figure: Mounting for Transparent and Opaque Material" on page 3). This minimizes strong direct reflections (which tend to overwhelm the sensor), and allows the sensor to discern the relatively small optical contrast offered by differences in colors.
- Clear materials are poor reflectors of light. When sensing a mark printed on a clear material (for example, a clear poly web), position a reflective surface directly behind the clear material to return light to the R58E. The printed mark, regardless of its color, then becomes the dark condition, as it blocks the light from reaching the reflective surface. Most clear materials are also shiny; it is important to include a 15° skew angle when sensing clear materials ("Figure: Mounting for Transparent and Opaque Material" on page 3).
- Whenever possible, sense a web material at a location where it passes over a tension bar or roller, to minimize the adverse effects of web flutter or sag ("Figure: Mounting for Matte Material " on page 3).

Mounting Distance and Lens Positions

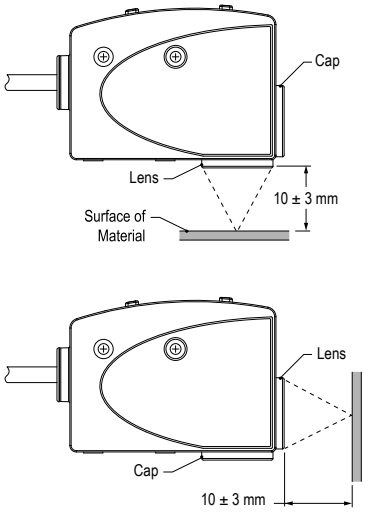

Mounting for Matte Material

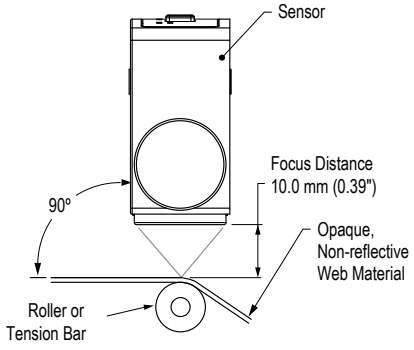

Mount the sensor perpendicular to non-reflective (matte) materials

Mounting for Transparent and Opaque Material

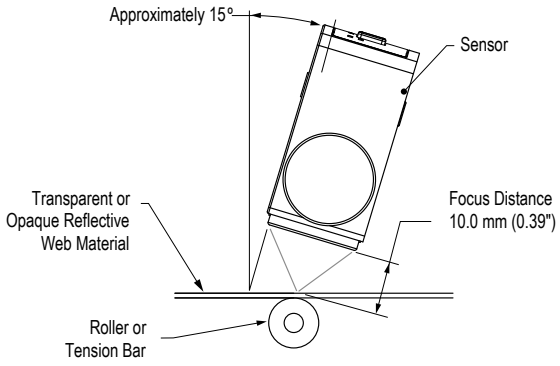

Mount the sensor at approximately 15 ° from perpendicular to transparent and opaque reflective materials

© Banner Engineering Corp. All rights reserved.
www.bannerengineering.com

Wiring Diagrams

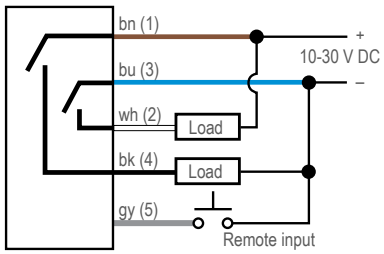

Key

1 = Brown
2 = White
3 = Blue
4 = Black
5 = Gray

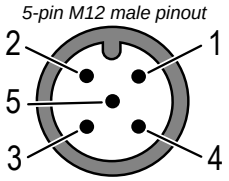

Sensor Configuration

The R58E is pre-set to power up in Run mode and to sense the most recently taught registration mark. Quickly optimize the sensitivity of the R58E using one of two available TEACH modes: Static TEACH or Dynamic TEACH.

Static TEACH: Both the Output ON and Output OFF conditions are presented, and sensitivity can be adjusted manually using the push buttons.

Dynamic TEACH: The registration mark is presented during actual sensing conditions, and the sensitivity can be adjusted manually using the push buttons.

Remote TEACH

Configure the sensor either using the push buttons, or using a remote switch. Remote configuration also may be used to enter Setup mode to set the ON- and OFF-delay, and to disable the push buttons to prevent unauthorized adjustment of the configuration settings. To access this feature, connect the gray wire of the sensor to 0 V dc, with a remote switch between the sensor and 0 V dc.

Follow the sequence of input pulses to configure the sensor (see the procedures in this document). The duration of each pulse (corresponding to a push button “click”), and the period between multiple pulses, are defined as: “T”: 0.04 seconds ≤ “T” ≤ 0.8 seconds.

Push Button Enable/Disable

In addition to its configuration function, the remote input may be used to disable the push buttons for security. Disabling the push buttons prevents unauthorized adjustment of the configuration settings. Connect the gray wire of the sensor as described in "R58E Wiring Diagrams" on page 4, and four-pulse to either enable or disable the push buttons. The duration of each button click or remote input pulse is defined as T, where T is: 0.04 s < T < 0.8 s.

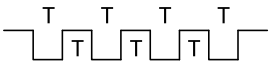

NOTE: Push buttons can be disabled/enabled from the remote line only.

Static TEACH

In Static TEACH mode, the sensor learns two sensing conditions after each is presented one time. The sensor automatically positions the switchpoint midway between the two conditions.

The sensor returns to Run mode if either TEACH condition is not registered within 60 seconds. The sensor reverts to the previous taught conditions.

Cancel TEACH mode by pressing and holding the Static push button for ≥ 2 seconds. The sensor reverts to the previous taught conditions (that is, exit without saving).

Static TEACH and Manual Adjust

Sensitivity may be adjusted at any time when the sensor is in Run mode by clicking the “+” and “-” buttons. Each click translates to 1/2 segment on the signal strength bargraph display. For best sensing reliability, both sensing conditions should register equally distant from the switchpoint on the signal strength bargraph display.

Static TEACH (Light Operate Shown)

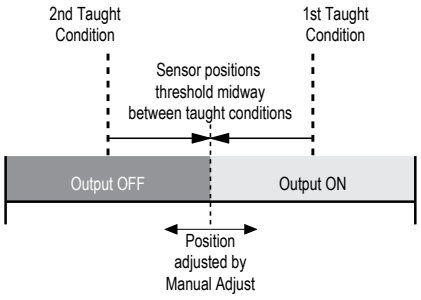

© Banner Engineering Corp. All rights reserved.
www.bannerengineering.com

1. Access TEACH mode.

Method	Action		Result
Push Button[1]	Press and hold **Static (-)** for > 2 seconds.		**LO and DO:** Alternately flash green **Output:** On amber (indicating ready to teach first sensing condition) **Bargraph display:** Turns off
Remote Input[2]	No action required; sensor is ready for the first sensing condition.		N/A

2. Teach the first sensing condition.

Method	Action		Result
Push Button	a. Present the first sensing condition. b. Click **Static (-)**.		**LO and DO:** Alternately flash green **Output:** Off (indicating ready to teach the second sensing condition) **Bargraph display:** Remains off
Remote Input	a. Present the first sensing condition. b. Single-pulse the remote input. c. Wait at least 8 seconds.		

3. Teach the second sensing condition.

Method	Action		Result
Push Button	a. Present the second sensing condition. b. Click **Static (-)**.		**Teach Accepted** ◦ The bargraph display flashes one segment for three seconds to indicate relative contrast (see "Contrast" on page 6) . ◦ The sensor enters Run mode. **Teach Not Accepted** ◦ Pairs of bargraph display segments flash for three seconds to indicate low contrast. ◦ The sensor returns to TEACH the first sensing condition.
Remote Input	a. Present the second sensing condition. b. Single-pulse the remote input.		

Dynamic TEACH

Dynamic TEACH is used to configure sensitivity during actual sensing conditions, when looking for a mark against its background condition.

The R58E takes multiple samples of the registration mark against its background material and automatically positions the threshold at the optimum level. The registration mark must be presented at least two times during Dynamic TEACH.

When Dynamic TEACH is used, the Output ON state is the shorter duration (smaller) event sensed, and LO/DO is set accordingly. To change the output state, change to either LO or DO in Setup mode, or pulse the remote line three times.

Dynamic TEACH (Light or Dark Operate, depending on the sensing condition shown)

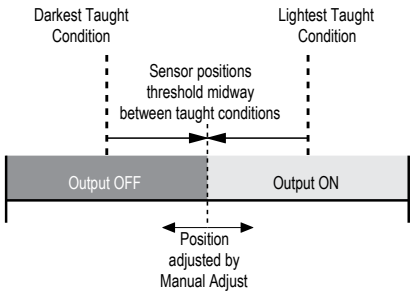

Maximum Feed Rate

To optimize performance and to ensure that all LED color and gain combinations are evaluated during Dynamic TEACH, the registration mark must encompass the 1.2 mm dimension of the 1.2 mm x 3.8 mm sensing image for at least 0.002 seconds. Determine the maximum feed rate using the following formula:

Maximum Feed Rate in mm/sec. = (registration mark width in mm – 1.2) / 0.002

Example with a 5 mm registration mark:

Maximum Feed Rate = (5 mm – 1.2) / 0.002 = 1900 mm/sec.

---

[1] 0.04 seconds ≤ “click” ≤ 0.8 seconds
[2] 0.04 seconds ≤ “T” ≤ 0.8 seconds

© Banner Engineering Corp. All rights reserved.
www.bannerengineering.com

NOTE: Registration marks narrower than the 1.2 mm sensing image width can be detected at feed rates less than 600 mm/sec, but the contrast is reduced due to averaging of the background and the registration mark.

Dynamic TEACH and Manual Adjust

Sensitivity may be adjusted at any time when the sensor is in Run mode by clicking the “+” and “-” buttons. Each click translates to 1/2 segment on the bargraph display. For best sensing reliability, the light and dark conditions should register equally distant from the switchpoint on the bargraph display.

Contrast

Bargraph Display Segment (following TEACH)	Relative Contrast/Recommendation
6 to 8	Excellent: Very stable operation.
4 to 5	Good: Minor sensing variables will not affect sensing reliability.
2 to 3	Low: Minor sensing variables may affect sensing reliability.
1	Poor: Consider an alternate sensing scheme.

NOTE: High contrast relates directly to sensing reliability; high-contrast sensing applications are most tolerant of sensing variables (for example, web flutter or variations in registration mark color and print density).

1. Access TEACH mode.

Method	Action		Result
Push Button[3]	Press and hold **Dynamic (+)** for > 2 seconds.		**LO and DO:** Alternately flash green **Output:** Off **Bargraph display:** Turns off
Remote Input[4]	Hold the remote line low for >2 seconds.		

2. Teach the sensing conditions.

Method	Action		Result
Push Button	a. Continue to press **Dynamic (+)**. b. Present the sensing conditions. Present registration marks at least twice.		**LO and DO:** Alternately flash green **Output:** Off **Bargraph display:** Remains off
Remote Input	a. Continue to hold the remote line low. b. Present the sensing conditions. Present registration marks at least twice.		

3. Return to Run mode.

Method	Action		Result
Push Button	Release **Dynamic (+)**.		**Teach Accepted** ◦ The bargraph display flashes one segment for three seconds to indicate relative contrast (see "Contrast" on page 6). ◦ The sensor enters Run mode. **Teach Not Accepted** ◦ Pairs of bargraph display segments flash in unison for three seconds to warn of unacceptably low contrast. ◦ The sensor returns to Run mode without changing settings.
Remote Input	Release the remote input/switch.		

Setup Mode

Use Setup mode to configure the discrete sensor output response for:

- Light or Dark Operate
- 30-millisecond pulse stretcher (OFF-delay), if required
- 30-millisecond ON-delay, if required

(3) 0.04 seconds ≤ “click” ≤ 0.8 seconds
(4) 0.04 seconds ≤ “T” ≤ 0.8 seconds

© Banner Engineering Corp. All rights reserved.
www.bannerengineering.com

Setup mode is also used to disable one or more sensing beam colors, to force the sensor to use a particular color. Access Setup mode only if the settings that result from TEACH mode configuration are not the settings required for the application or if a delay is required. The status LEDs indicate the output response configuration when the sensor is in Run mode, as shown.

LED Color Configuration Options

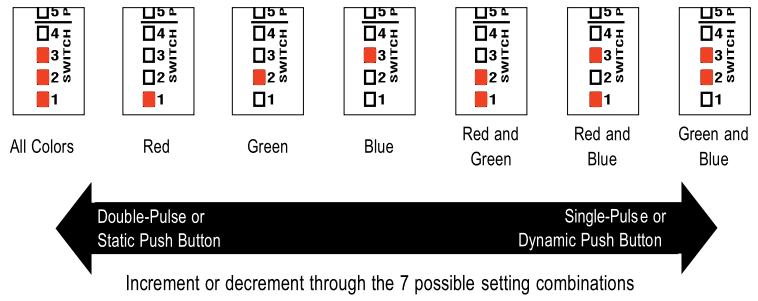

Output Response Configuration Options

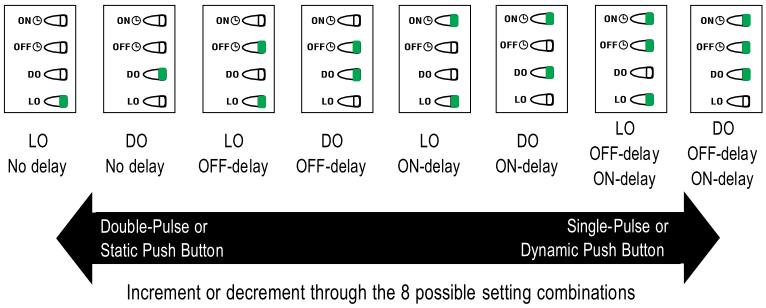

Change the output response settings or disable sensing beam color(s) as shown in "R58E Setup Configuration" on page 7.

NOTE: If Setup mode programming is interrupted and remains inactive for 60 seconds, the sensor returns to Run mode with the most recent settings (that is, exits and saves the current selection).

Setup Configuration

1. Enter Setup mode.

Method	Action		Result
Push Button[5]	Press and hold both **Static (-)** and **Dynamic (+)** for > 2 seconds.		The 8-segment display turns off. The sensor is in Setup mode.
Remote Input[6]	Double-pulse the remote input.		

2. Select the LO/DO and Delay settings.

Method	Action		Result
Push Button	a. Release the buttons. b. Click **Static (-)** or **Dynamic (+)** to toggle between choices: ◦ **Dynamic (+)**—increment ◦ **Static (-)**—decrement		a. The sensor is ready to select a new setting combination. b. Sensor steps between LO/DO and Delay setting combinations, as shown "Figure: Output Response Configuration Options" on page 7.
Remote Input	a. Wait > 8 seconds. b. Enter sequential pulses to toggle between choices: ◦ Single-pulse—increment ◦ Double-pulse—decrement	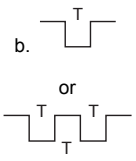	

[5] 0.04 seconds ≤ “click” ≤ 0.8 seconds
[6] 0.04 seconds ≤ “T” ≤ 0.8 seconds

© Banner Engineering Corp. All rights reserved.
www.bannerengineering.com

NOTE: There is a LO/DO settings shortcut using the remote input. From Run mode, triple-pulse the remote line. The sensor toggles between LO/DO settings on-the-fly, and continues in Run mode.

3. Enter the sensing beam color select mode from Setup mode.

Method	Action		Result
Push Button	From Setup mode, press and hold **Dynamic (+)** > 2 seconds.		The sensor displays the currently selected sensing beam color combinations, as shown "Figure: LED Color Configuration Options" on page 7. The visible sensing beam also provides indication of enabled sensing beam color(s).
Remote Input	From Setup mode, four pulse the remote input.	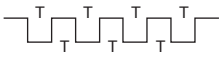	

4. Enable/Disable sensing beam colors.

Method	Action		Result
Push Button	Click **Static (-)** or **Dynamic (+)** to toggle between choices: ◦ **Dynamic (+)**—increment ◦ **Static (-)**—decrement		The sensor steps between the possible sensing beam color combinations, as shown in "Figure: LED Color Configuration Options" on page 7.[7] The visible sensing beam also provides indication of enabled sensing beam color(s).
Remote Input	Enter sequential pulses to toggle between choices: ◦ Single-pulse—increment ◦ Double-pulse—decrement	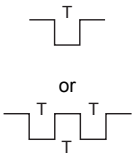	

5. Return to Run mode.

Method	Action		Result
Push Button	a. Press and hold **Static (-)** for > 2 seconds to return to Setup mode. b. Press and hold both push buttons > 2 seconds to return to Run mode OR wait > 60 seconds.		The sensor returns to Run mode with new settings. These steps return to Run mode from both Setup modes.
Remote Input	a. Four-pulse the remote line to return to Setup mode. b. Hold the remote line low > 2 seconds to return to Run mode OR wait >60 seconds.	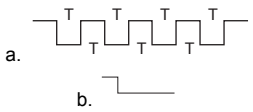	

Specifications

Supply Voltage and Current

10 V DC to 30 V DC (10% maximum ripple)

Supply current (exclusive of load current):

75 mA max at 10 V DC
35 mA at 30 V DC

Supply Protection Circuitry

Protected against reverse polarity and transient voltages

Output Configuration

Outputs are bipolar: one current sourcing (PNP) and one current sinking (NPN) open-collector transistor

Output Rating

100 mA maximum, each output

OFF-state leakage current: NPN < 200 microamps; PNP < 10 microamps (see Application Note 1)

NPN Saturation: < 1.6 V at 100 mA

PNP Saturation: < 3.0 V at 100 mA

Output Protection Circuitry

Protected against output short-circuit, continuous overload, and false pulse on power-up

Output Response Time

50 microseconds

NOTE: 1 second delay on power-up; output does not conduct during this time

Repeatability

15 microseconds

Tri-Color LED Sensing Image

Rectangular: 1.2 mm x 3.8 mm (0.05 in x 0.15 in) at 10 mm (0.39 in) from the face of the lens; image oriented either parallel or perpendicular to sensor length, depending on model

Red: 636 nm; **Green:** 525 nm; **Blue:** 472 nm

[7] If the new color setting has only one sensing beam color enabled, the sensor will switch to that color for sensing.
If the new color setting has multiple sensing beam colors enabled, the sensor will use the color that was active prior to configuration; following the next TEACH procedure, it will select the enabled sensing beam color that has the greatest contrast.

© Banner Engineering Corp. All rights reserved.
www.bannerengineering.com

Adjustments

Using push buttons ("+" Dynamic and "-" Static):

Manually adjust discrete output switchpoint using "+" or "-" buttons
Dynamic TEACH (teach on-the-fly) sensitivity adjustment
Static TEACH sensitivity adjustment
Light operate/Dark operate
OFF-delay/ON-delay
Sensing beam color enable/disable

Using Remote TEACH input (gray wire):

Dynamic TEACH (teach on-the-fly) sensitivity adjustment
Static TEACH sensitivity adjustment
Light operate/Dark operate
OFF-delay/ON-delay
Sensing beam color enable/disable
Disable push buttons for security

Indicators

8-segment Barograph display: Red signal strength indicator relative to taught signal level; higher segment number for higher sensing contrast

Light Operate: Green

Dark Operate: Green

OFF-Delay: Green

ON-Delay: Green

Output Conducting: Amber

Power/Run Mode: Green

Construction:

Housing: Zinc alloy die-cast and steel housing with black painted finish and o-ring sealed lens and lens port cap

Lens: Acrylic

Lens port cap and lens holder: ABS

Push-buttons: Thermoplastic elastomer

Labels: Polycarbonate

Environmental Rating

IP67

Connections

PVC-jacketed 5-conductor 2 m (6.5 ft) or 9 m (30 ft) cable with internal strain relief; integral 5-pin M12 QD fitting; or 150 mm (6 in) pigtail with 5-pin M12 QD fitting

Operating Conditions

Temperature: –10 °C to +55 °C (+14 °F to +131 °F)

Storage Temperature –20 °C to +80 °C (–4 °F to +176 °F)

90% at +50 °C maximum relative humidity (non-condensing)

Vibration and Mechanical Shock

All models meet IEC 60068-2-6 and IEC 60068-2-27 testing criteria

Application Notes

1. NPN OFF-state leakage current is < 200 µA for load impedances > 3kΩ or optically isolated loads. For load current of 100 mA, leakage is < 1% of load current.
2. Do not mount the sensor directly perpendicular to shiny surfaces; position it at approximately a 15° angle in relation to the sensing target (see "Mounting Considerations" on page 3).
3. Minimize web or product "flutter" whenever possible to maximize sensing reliability.

Required Overcurrent Protection

WARNING: Electrical connections must be made by qualified personnel in accordance with local and national electrical codes and regulations.

Overcurrent protection is required to be provided by end product application per the supplied table.

Overcurrent protection may be provided with external fusing or via Current Limiting, Class 2 Power Supply.

Supply wiring leads < 24 AWG shall not be spliced.

For additional product support, go to www.bannerengineering.com.

Supply Wiring (AWG)	Required Overcurrent Protection (A)	Supply Wiring (AWG)	Required Overcurrent Protection (A)
20	5.0	26	1.0
22	3.0	28	0.8
24	2.0	30	0.5

Certifications

Banner Engineering BV
Park Lane, Culliganlaan 2F bus 3
1831 Diegem, BELGIUM

Industrial Control Equipment

3TJJ

FCC Part 15 Class A for Unintentional Radiators

This equipment has been tested and found to comply with the limits for a Class A digital device, pursuant to Part 15 of the FCC Rules. These limits are designed to provide reasonable protection against harmful interference when the equipment is operated in a commercial environment. This equipment generates, uses, and can radiate radio frequency energy and, if not installed and used in accordance with the instruction manual, may cause harmful interference to radio communications. Operation of this equipment in a residential area is likely to cause harmful interference in which case the user will be required to correct the interference at his own expense.

(Part 15.21) Any changes or modifications not expressly approved by the party responsible for compliance could void the user's authority to operate this equipment.

Industry Canada ICES-003(A)

This device complies with CAN ICES-3 (A)/NMB-3(A). Operation is subject to the following two conditions: 1) This device may not cause harmful interference; and 2) This device must accept any interference received, including interference that may cause undesired operation.

Cet appareil est conforme à la norme NMB-3(A). Le fonctionnement est soumis aux deux conditions suivantes : (1) ce dispositif ne peut pas occasionner d'interférences, et (2) il doit tolérer toute interférence, y compris celles susceptibles de provoquer un fonctionnement non souhaité du dispositif.

© Banner Engineering Corp. All rights reserved.
www.bannerengineering.com

Dimensions

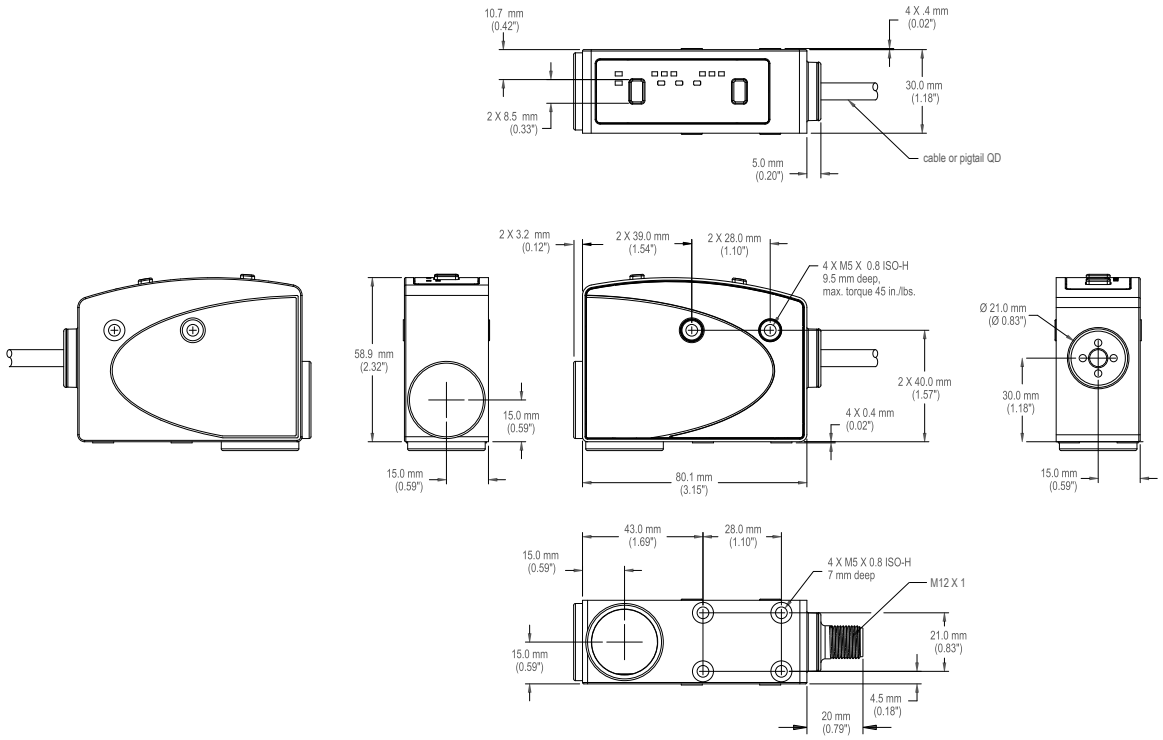

All measurements are listed in millimeters [inches], unless noted otherwise. The measurements provided are subject to change.

Accessories

Quick-Disconnect (QD) Cordsets

5-Pin Single-Ended M12 Female Shielded Cordsets				
Model	**Length**	**Style**	**Dimensions**	**Pinout (Female)**
MQDEC2-506	2 m (6.56 ft)	Straight	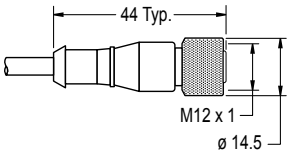	 1 = Brown 2 = White 3 = Blue 4 = Black 5 = Gray c UL us
MQDEC2-515	5 m (16.4 ft)			
MQDEC2-530	9 m (29.5 ft)			
MQDEC2-550	15 m (49.2 ft)			
MQDEC2-575	23 m (75.44 ft)			
MQDEC2-5100	30.5 m (100 ft)			
MQDEC2-506RA	2 m (6.56 ft)	Right-Angle	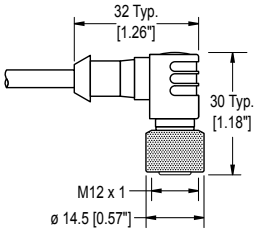	
MQDEC2-515RA	5 m (16.4 ft)			
MQDEC2-530RA	9 m (29.5 ft)			
MQDEC2-550RA	15 m (49.2 ft)			
MQDEC2-575RA	23 m (75.44 ft)			
MQDEC2-5100RA	31 m (101.68 ft)			

© Banner Engineering Corp. All rights reserved.
www.bannerengineering.com

Mounting Brackets

SMB55A
- 15° offset bracket
- 12-gauge stainless steel
- CAD Files: DXF, PDF, IGS, STP



SMB55F
- Flat-mount bracket
- 12-gauge stainless steel
- CAD Files: DXF, PDF, IGS, STP



SMB55RA
- Right-angle bracket
- 12-gauge stainless steel
- CAD Files: DXF, PDF, IGS, STP



SMB55S
- 15° offset bracket
- 12-gauge stainless steel
- CAD Files: DXF, PDF, IGS, STP



R58 Replacement Lens

UC-R55
- Replacement lens for R58A, R58B, and R58E



Banner Engineering Corp Limited Warranty

Banner Engineering Corp. warrants its products to be free from defects in material and workmanship for one year following the date of shipment. Banner Engineering Corp. will repair or replace, free of charge, any product of its manufacture which, at the time it is returned to the factory, is found to have been defective during the warranty period. This warranty does not cover damage or liability for misuse, abuse, or the improper application or installation of the Banner product.

THIS LIMITED WARRANTY IS EXCLUSIVE AND IN LIEU OF ALL OTHER WARRANTIES WHETHER EXPRESS OR IMPLIED (INCLUDING, WITHOUT LIMITATION, ANY WARRANTY OF MERCHANTABILITY OR FITNESS FOR A PARTICULAR PURPOSE), AND WHETHER ARISING UNDER COURSE OF PERFORMANCE, COURSE OF DEALING OR TRADE USAGE.

This Warranty is exclusive and limited to repair or, at the discretion of Banner Engineering Corp., replacement. **IN NO EVENT SHALL BANNER ENGINEERING CORP. BE LIABLE TO BUYER OR ANY OTHER PERSON OR ENTITY FOR ANY EXTRA COSTS, EXPENSES, LOSSES, LOSS OF PROFITS, OR ANY INCIDENTAL, CONSEQUENTIAL OR SPECIAL DAMAGES RESULTING FROM ANY PRODUCT DEFECT OR FROM THE USE OR INABILITY TO USE THE PRODUCT, WHETHER ARISING IN CONTRACT OR WARRANTY, STATUTE, TORT, STRICT LIABILITY, NEGLIGENCE, OR OTHERWISE.**

Banner Engineering Corp. reserves the right to change, modify or improve the design of the product without assuming any obligations or liabilities relating to any product previously manufactured by Banner Engineering Corp. Any misuse, abuse, or improper application or installation of this product or use of the product for personal protection applications when the product is identified as not intended for such purposes will void the product warranty. Any modifications to this product without prior express approval by Banner Engineering Corp will void the product warranties. All specifications published in this document are subject to change; Banner reserves the right to modify product specifications or update documentation at any time. Specifications and product information in English supersede that which is provided in any other language. For the most recent version of any documentation, refer to: www.bannerengineering.com.

For patent information, see www.bannerengineering.com/patents.

© Banner Engineering Corp. All rights reserved.
www.bannerengineering.com