TABLE OF LENGTHS				
P/N	MODEL NO.	"L1"(m)	"L2"(mm)	"L3"(mm)
808215	PKG4M-.15-PSG3M	0.15	NA	NA

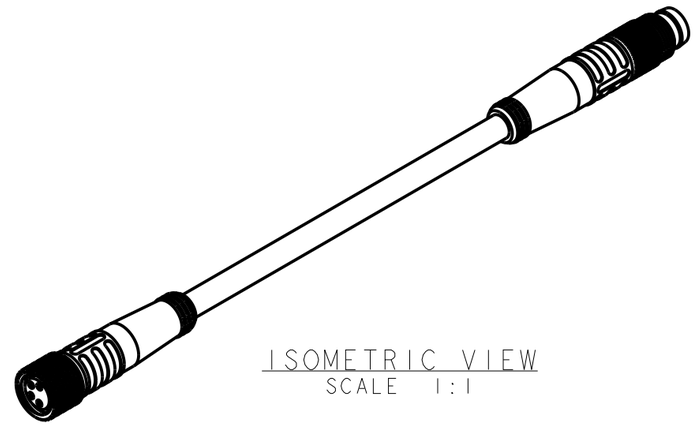

ISOMETRIC VIEW
SCALE 1:1

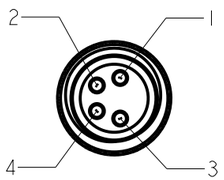

FEMALE POLES

1. BROWN
2. NC
3. BLUE
4. BLACK

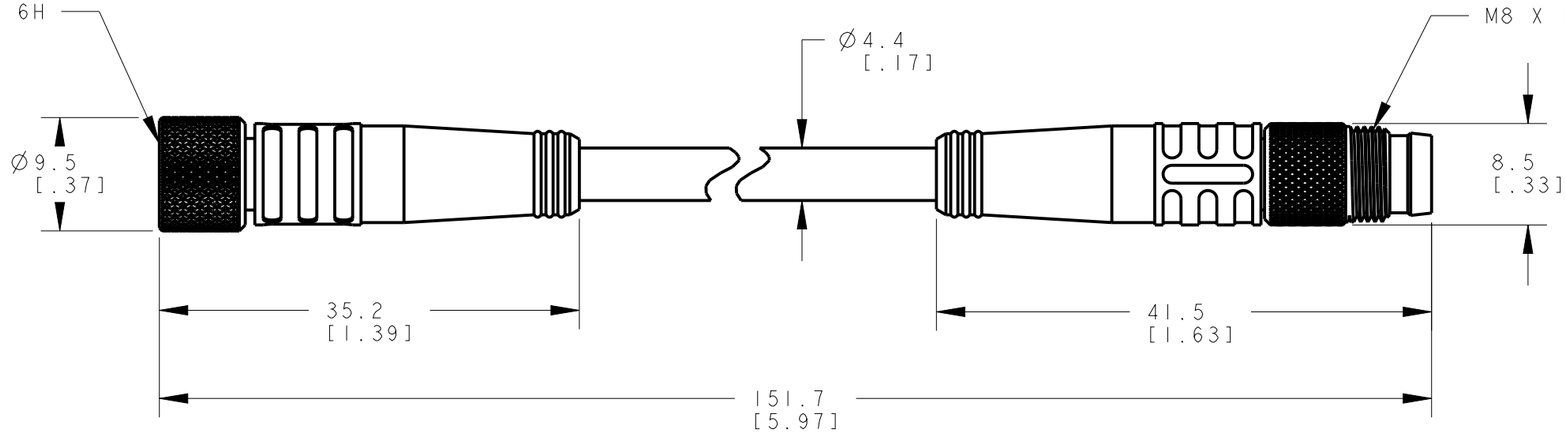

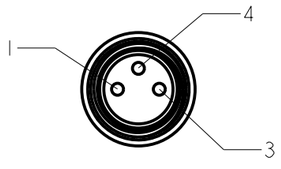

MALE POLES

1. BROWN
4. BLACK
3. BLUE

NOTES:
1. ALL DIMENSIONS ARE MILLIMETERS [INCHES] UNLESS OTHERWISE NOTED.
2. REFER TO "www.bannerengineering.com" FOR ADDITIONAL DATA AND SPECIFICATIONS.

This drawing is the property of BANNER ENGINEERING CORP. Any use or reproduction, in any form, without prior written permission of Banner is prohibited.
© 2015 Banner Engineering Corp.

THIRD ANGLE PROJECTION

BANNER ENGINEERING CORP.
www.bannerengineering.com

TITLE

PKG4M-XXX- PSG3M

SIZE	DRAWING NO.	REV.
B	214463	A
SCALE 2:1		SHEET 1 OF 1

CREO

ПРОМЭЛЕКТРОНИКА/ sales@prom-elec.com