QS18 Clear Object Detection Series Sensor Product Manual

Original Instructions
p/n: 195634 Rev. E
02-Jun-26
© Banner Engineering Corp. All rights reserved. www.bannerengineering.com

ПРОМЭЛЕКТРОНИКА/ sales@prom-elec.com

Contents

Chapter 1 Features 3
Models 3
Specifications 4
FCC Part 15 Class A for Unintentional Radiators 4
Industry Canada ICES-003(A) 4
Dimensions 5
Performance Curves 5

Chapter 2 Overview 6
Installing and Mounting the Sensor for Low Contrast Applications 6
Wiring Diagrams 7

Chapter 3 Sensor Sensitivity Adjustment 8
Sensor Sensitivity Adjustment for Transparent Object Detection 8
Sensor Sensitivity Adjustment for Opaque Object Detection 8

Chapter 4 Accessories 9
Cordsets 9
Retroreflectors 10
Brackets 11

Chapter 5 Product Support and Maintenance 13
Clean Sensor with Compressed Air Then Isopropyl Alcohol 13
Repairs and Translations (No Field-Replaceable Parts) 13
Contact Us 15
Banner Engineering Corp Limited Warranty 15

© Banner Engineering Corp. All rights reserved. www.bannerengineering.com

Chapter Contents

Models 3
Specifications 4

Chapter 1 Features

Cost-effective coaxial optics clear object sensor

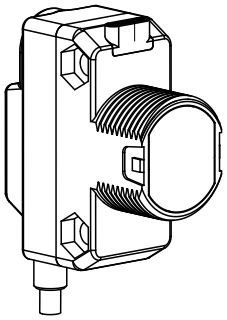

- Reliably detects clear, translucent, or opaque objects — including PET, glass containers, and transparent films
- Coaxial optics enable reliable detection of targets to the face of the sensor with no dead zone
- Simple setup and adjustment with a single-turn sensitivity adjuster
- Signal strength indicator aids in adjusting sensor sensitivity and monitoring performance
- Fast response speed with low jitter for high-speed bottling and packaging applications
- Bright, visible red light spot for easy alignment
- Convenient mounting options available for 18 mm barrel or side mount
- Bright indicator LEDs show operating status from 360°
- IP67 rated ABS housing
- Dedicated PNP or NPN output depending on model

WARNING:

- **Do not use this device for personnel protection**
- Using this device for personnel protection could result in serious injury or death.
- This device does not include the self-checking redundant circuitry necessary to allow its use in personnel safety applications. A device failure or malfunction can cause either an energized (on) or de-energized (off) output condition.

Models

Models	Mode	Range	Output
QS18VN6XLP	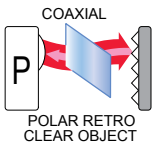	0 to 2 m (0 to 6.5 ft) on BRT-60X40C 0 to 2.5 m (0 to 8.1 ft) on BRT-51X51BM 0 to 3.0 m (0 to 9.8 ft) on BRT-92X92C	NPN
QS18VP6XLP			PNP

Integral 2 m (6.5 ft) unterminated cable models are listed.

- To order the 4-pin M12 integral quick disconnect model, add the suffix "Q8" to the model number. For example, QS18VN6XLPQ8.
- To order the 150 mm (6 in) PVC cable model with a 4-pin M12 quick disconnect, add the suffix "Q5" to the model number. For example, QS18VN6XLPQ5.
- To order the 4-pin M8 integral quick disconnect model, add the suffix "Q7" to the model number. For example, QS18VN6XLPQ7.
- To order the 150 mm (6 in) PVC cable model with a 4-pin M8 quick disconnect, add the suffix "Q" to the model number. For example, QS18VN6XLPQ.
- Models with a quick disconnect require a mating cordset.

The following models are no longer available for order but are still covered by the information in this document.

- QS18VN6XLP W/30 (9 m cable)
- QS18VP6XLP W/30 (9 m cable)

© Banner Engineering Corp. All rights reserved.
www.bannerengineering.com

Specifications

Supply Voltage
10 V to 30 V DC (10% maximum ripple) within specified limits

Supply Current (Exclusive of Load Current)
< 25 mA

Repeatability
100 µs

Supply Protection Circuitry
Protected against reverse polarity and transient voltages

Output Protection Circuitry
Protected against false pulse on power-up and continuous overload or short-circuit

Output Configuration
Current sourcing (PNP) or current sinking (NPN), depending on model

Rating: 100 mA maximum

OFF-State leakage current: < 50 µA at 30 V

ON-state saturation voltage: < 1.5 V at 10 mA; < 3 V 100 mA

Output Response Time
Note: Momentary delay on power-up; output does not conduct during this time

400 µs ON/OFF

Emitter LED
Visible red, 625 nm

Indicators
Two LEDs (1 green, 1 amber)

Green solid: Indicates power is applied and the sensor is ready

Green flashing: Indicates the sensor is operating near the switch point

Amber solid: Indicates output conducting

Mounting Torque
Barrel mount: 18 mm mounting nut, 20 lbf·in (2.3 N·m)

Side mount: Two M3 screws, 5 lbf·in (0.6 N·m)

Construction
ABS housing, PMMA window

Connections
PVC-jacketed 4-conductor 2 m (6.5 ft) or 9 m (30 ft) unterminated cable, or 4-pin M12 or 4-pin M8 quick-disconnect, either integral or 150 mm (6 in) cabled, are available. Quick disconnect cordsets are ordered separately.

Operating Conditions
Temperature: –40 °C to +70 °C (–40 °F to +158 °F)

Humidity: 95% at +50 °C maximum relative humidity (non-condensing)

Environmental
IP67; NEMA 6

Adjustments
Single-turn sensitivity adjustment

Application Notes
Reflectors with micro-prism geometry, such as the BRT-51X51BM, are recommended for demanding transparent object detection applications.

Retroreflective tape is not recommended for transparent object detection applications.

Certifications

Banner Engineering BV
Park Lane, Culliganlaan 2F bus 3
1831 Diegem, BELGIUM

Turck Banner LTD Blenheim House
Blenheim Court
Wickford, Essex SS11 8YT
GREAT BRITAIN

Required Overcurrent Protection

WARNING: Electrical connections must be made by qualified personnel in accordance with local and national electrical codes and regulations.

Overcurrent protection is required to be provided by end product application per the supplied table.

Overcurrent protection may be provided with external fusing or via Current Limiting, Class 2 Power Supply.

Supply wiring leads < 24 AWG shall not be spliced.

For additional product support, go to www.bannerengineering.com.

Supply Wiring (AWG)	Required Overcurrent Protection (A)	Supply Wiring (AWG)	Required Overcurrent Protection (A)
20	5.0	26	1.0
22	3.0	28	0.8
24	2.0	30	0.5

FCC Part 15 Class A for Unintentional Radiators

This equipment has been tested and found to comply with the limits for a Class A digital device, pursuant to Part 15 of the FCC Rules. These limits are designed to provide reasonable protection against harmful interference when the equipment is operated in a commercial environment. This equipment generates, uses, and can radiate radio frequency energy and, if not installed and used in accordance with the instruction manual, may cause harmful interference to radio communications. Operation of this equipment in a residential area is likely to cause harmful interference in which case the user will be required to correct the interference at his own expense.

(Part 15.21) Any changes or modifications not expressly approved by the party responsible for compliance could void the user's authority to operate this equipment.

Industry Canada ICES-003(A)

This device complies with CAN ICES-3 (A)/NMB-3(A). Operation is subject to the following two conditions: 1) This device may not cause harmful interference; and 2) This device must accept any interference received, including interference that may cause undesired operation.

Cet appareil est conforme à la norme NMB-3(A). Le fonctionnement est soumis aux deux conditions suivantes : (1) ce dispositif ne peut pas occasionner d'interférences, et (2) il doit tolérer toute interférence, y compris celles susceptibles de provoquer un fonctionnement non souhaité du dispositif.

© Banner Engineering Corp. All rights reserved.

Dimensions

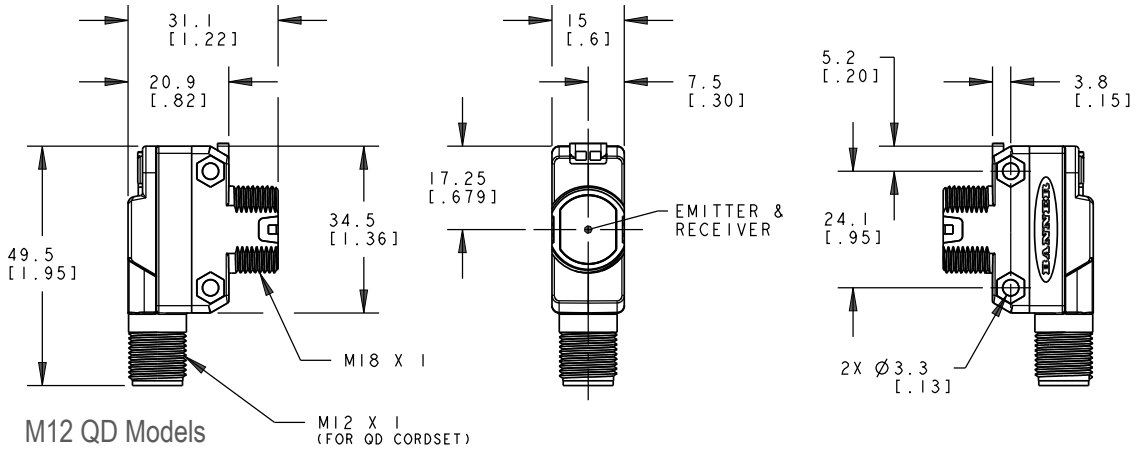

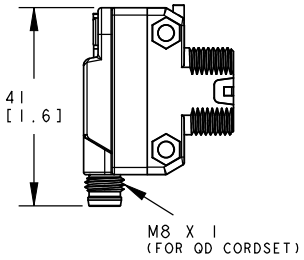

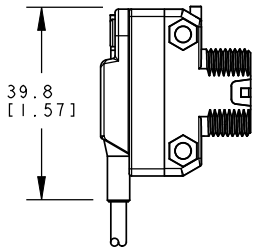

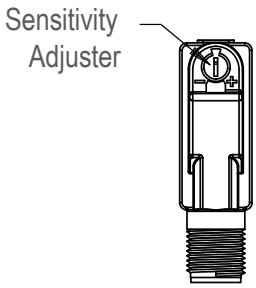

Performance Curves

Spot size vs. distance

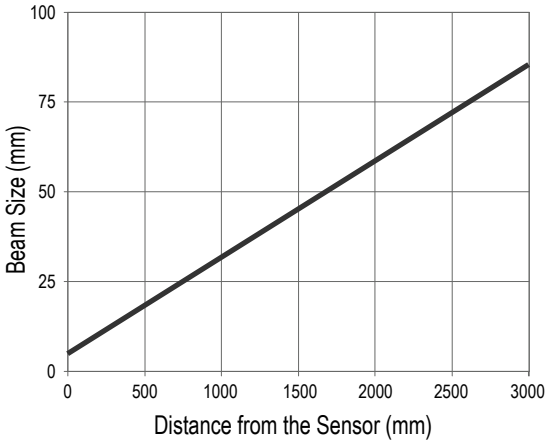

Excess gain

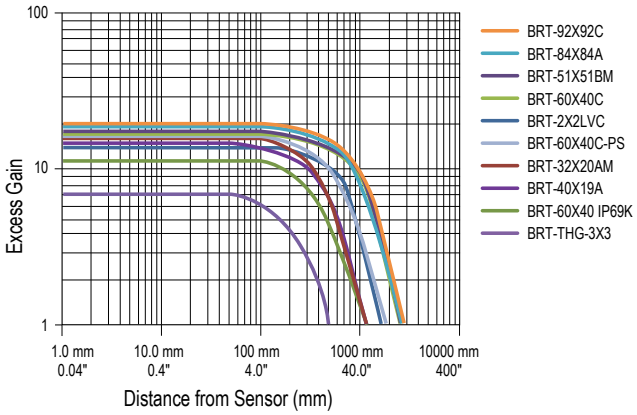

© Banner Engineering Corp. All rights reserved.
www.bannerengineering.com

Chapter Contents

Installing and Mounting the Sensor for Low Contrast Applications 6
Wiring Diagrams 7

Chapter 2 Overview

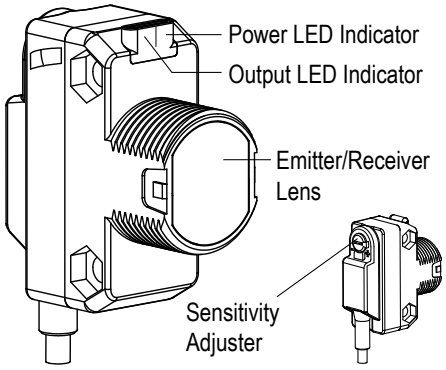

The Banner QS18 sensor is a high-performance clear object detection sensor. The polarized coaxial optical design ensures reliable detection of transparent, translucent, and opaque targets at any distance between the sensor and the reflector. Low contrast sensing applications include PET bottles, glass containers, and transparent films. The sensor can also be used to detect optical surfaces such as LCD panels with built-in polarizing films, solar panels, and semiconductor wafers.

Sensor Condition	Green LED	Amber LED
Output OFF (black wire)	ON	OFF
Output ON (black wire)	ON	ON
Notification — Signal strength is near the switch point and indicates a marginal sensing condition	Flashing at 5 Hz	Can be ON or OFF
Power ON	ON	—

Installing and Mounting the Sensor for Low Contrast Applications

Reliable transparent object detection depends on the sensor always detecting the object as "dark state" and the reflector as the "light state". Using a recommended reflector, and proper orientation of the sensor to the reflector, is key to good clear object detection. Optimize the reliable detection of transparent and clear objects by applying the following steps when mounting the sensor and selecting a retroreflective target.

1. If a bracket is needed, mount the sensor onto the bracket.
2. Mount the sensor (or the sensor and the bracket) to the equipment at the desired location. Do not tighten at this time.
3. Align the sensor's light spot to the middle of the retroreflector.
4. Mount the retroreflector perpendicular to the sensor optical axis (± 5°).
5. Tighten the screws to secure the sensor (or the sensor and the bracket) to the aligned position.

Mounting Considerations for Opaque Objects with Mirror-Like Surfaces—To minimize the potential for reflections from mirror-like objects affecting the sensor, it is best to side-mount the sensor.

© Banner Engineering Corp. All rights reserved.
www.bannerengineering.com

Wiring Diagrams

NPN

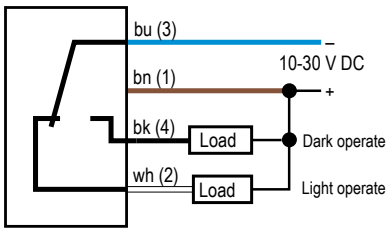

1. Brown
2. White
3. Blue
4. Black

PNP

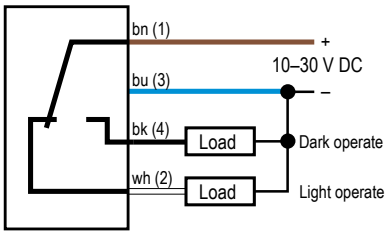

1. Brown
2. White
3. Blue
4. Black

4-pin M12 Male

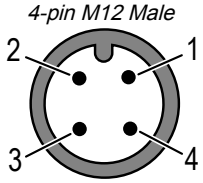

4-pin M8 Male

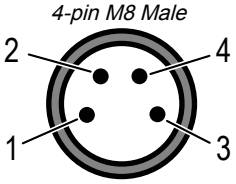

In dark operate (DO) mode, the output is ON when the target returns less light to the sensor than the configured target and OFF when the sensor detects more light than the configured/taught target.

In light operate (LO) mode, the output is ON when the target returns the same or more light to the sensor and OFF when the sensor detects less light than the configured/taught target.

In **retroreflective** sensing modes, light operate is active when the beam is unblocked and dark operate is active when the beam is blocked.

© Banner Engineering Corp. All rights reserved.
www.bannerengineering.com

Chapter Contents

Sensor Sensitivity Adjustment for Transparent Object Detection 8
Sensor Sensitivity Adjustment for Opaque Object Detection 8

Chapter 3 Sensor Sensitivity Adjustment

After the sensor and retroreflector have been properly installed, the sensor is ready to be adjusted to ensure detection of the desired object. Sensor sensitivity is adjusted with the single turn adjuster.

Sensor Sensitivity Adjustment for Transparent Object Detection

To adjust the sensor sensitivity to detect transparent objects, follow these steps:

1. Ensure there is nothing obstructing the optical path between the sensor and retroreflector.
2. Turn the sensitivity adjuster counterclockwise to the adjuster stop position.
3. Slowly rotate the sensitivity adjuster clockwise until the green LED starts flashing and the amber LED turns off.
4. Continue to turn the sensitivity adjuster clockwise until the green LED stops flashing.
5. At this point, the sensor is set to detect low-contrast glass and plastic containers.
6. Verify the sensor can now reliably detect the transparent target.

This level of adjustment should work for most transparent object detection applications. For more demanding applications, the sensor can be adjusted closer to the switch point.

Sensor Sensitivity Adjustment for Opaque Object Detection

To adjust the sensor sensitivity to detect objects that are completely opaque, follow these steps:

1. Ensure there is nothing obstructing the optical path between the sensor and retroreflector.
2. Turn the sensitivity adjuster clockwise to the adjuster stop position. The amber LED should be off.
3. Place the opaque object between the sensor and the reflector.
4. Turn the sensitivity adjuster counterclockwise until the amber LED turns on and the green LED is on solid.
5. Verify the sensor can reliably detect the opaque object.

If the sensor cannot reliably detect the object, use the procedure specified above for transparent object detection.

© Banner Engineering Corp. All rights reserved.
www.bannerengineering.com

Chapter Contents

Cordsets 9
Retroreflectors 10
Brackets 11

Chapter 4 Accessories

Cordsets

Use the M12 cordsets with the QS18 models with an M12 quick disconnect connector. Use the M8 cordsets with the QS18 models with an M8 QD.

4-pin Single-Ended M12 Female Cordsets (datasheet p/n 235937)				
Model	**Length**	**Dimensions (mm)**	**Pinout (Female)**	
BC-M12F4-22-1	1 m (3.28 ft)	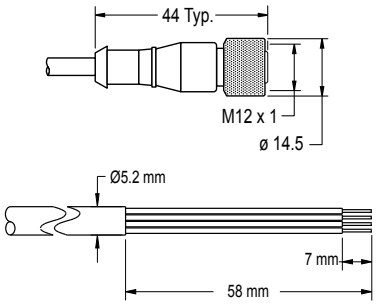	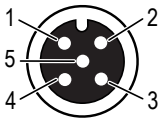	1 = Brown 2 = White 3 = Blue 4 = Black 5 = Unused c UL us LISTED
BC-M12F4-22-2	2 m (6.56 ft)			
BC-M12F4-22-5	5 m (16.4 ft)			
BC-M12F4-22-8	8 m (26.25 ft)			
BC-M12F4-22-10	10 m (30.81 ft)			
BC-M12F4-22-15	15 m (49.2 ft)			
BC-M12F4-22-20	20 m (65.61 ft)			
BC-M12F4-22-25	25 m (82.02 ft)			
BC-M12F4-22-30	30 m (98.42 ft)			

4-pin Single-Ended M12 Female Right-Angle Cordsets (datasheet p/n 235937)				
Model	**Length**	**Dimensions (mm)**	**Pinout (Female)**	
BC-M12F4A-22-1	1 m (3.28 ft)	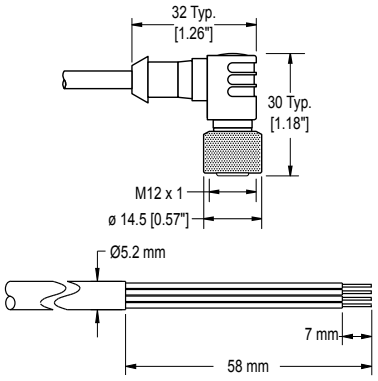	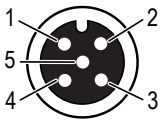	1 = Brown 2 = White 3 = Blue 4 = Black 5 = Unused c UL us LISTED
BC-M12F4A-22-2	2 m (6.56 ft)			
BC-M12F4A-22-5	5 m (16.4 ft)			
BC-M12F4A-22-8	8 m (26.25 ft)			
BC-M12F4A-22-10	10 m (30.81 ft)			
BC-M12F4A-22-15	15 m (49.2 ft)			

© Banner Engineering Corp. All rights reserved.
www.bannerengineering.com

4-pin Single-Ended M8 Female Cordsets (datasheet p/n 236623)				
Model	**Length**	**Dimensions (mm)**	**Pinout (Female)**	
BC-M8F4-24-0.5	0.5 m (1.64 ft)	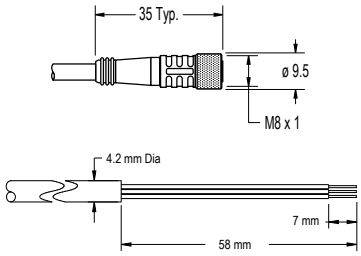	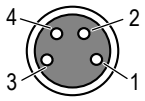	1 = Brown 2 = White 3 = Blue 4 = Black
BC-M8F4-24-1	1 m (3.28 ft)			
BC-M8F4-24-2	2 m (6.56 ft)			
BC-M8F4-24-5	5 m (16.4 ft)			
BC-M8F4-24-8	8 m (26.25 ft)			
BC-M8F4-24-10	10 m (30.81 ft)			

Retroreflectors

BRT-51X51BM

- Square, acrylic target
- Reflectivity Factor: 1.5
- Temperature: –20 °C to +50 °C (–4 °F to +122 °F)
- Micro-prism geometry
- Optional brackets are available
- Reflector size: 51 mm × 51 mm
- Approximate size: 51 mm × 61 mm × 6.2 mm
- Two 4.6 mm diameter slots for mounting
- CAD Files: DXF, PDF, IGS, STP



BRT-60X40C and **BRT-60X40CM** (Microprism)

- Rectangular, acrylic target
- Reflectivity Factor: 1.4
- Temperature: –20 °C to +60 °C (–4 °F to +140 °F)
- Optional brackets are available
- Approximate size: 40 mm × 60 mm
- **BRT-60X40C** CAD Files: DXF, PDF, IGS, STP
- **BRT-60X40CM** CAD Files: DXF, PDF, IGS, STP



BRT-92X92C

- Square, acrylic target
- Reflectivity Factor: 3.0
- Temperature: –20 °C to +60 °C (–4 °F to +140 °F)
- Optional brackets are available
- Reflector size: 92 mm × 92 mm
- Approximate size: 100 mm × 100 mm × 9 mm
- Two 3.5 mm diameter mounting holes
- CAD Files: DXF, PDF, IGS, STP



© Banner Engineering Corp. All rights reserved.
www.bannerengineering.com

BRT-40X19A

- Rectangular, acrylic target
- Reflectivity Factor: 1.3
- Temperature: –20 °C to +60 °C (–4 °F to +140 °F)
- Reflector size: 18 mm × 40 mm
- Approximate size: 18 mm × 60 mm × 7.3 mm
- Two 4 mm diameter mounting holes, 50 mm centers
- CAD Files: DXF, PDF, IGS, STP

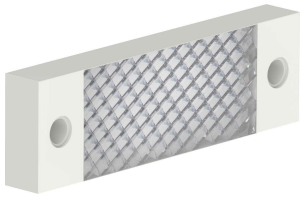

BRT-60X40IP69K

- Rectangular, acrylic target (color is amber)
- Reflectivity Factor: 0.7
- Temperature: –20 °C to +140 °C (–4 °F to +284 °F)
- Chemically resistant
- IP69K washdown rated
- Optional brackets are available
- Approximate size: 40 mm × 60 mm
- CAD Files: DXF, PDF, IGS, STP



BRT-60X40C-PS

- Rectangular, polystyrene target
- Reflectivity Factor: 1.1
- Temperature: –20 °C to +60 °C (–4 °F to +140 °F)
- Optional brackets are available
- Chemically compatible with hydrogen peroxide
- Yellow back
- Approximate size: 40 mm × 60 mm



2-inch retroreflective tape, 2.5 m (100 in)

Model	Reflectivity Factor	Maximum Temperature	Size
BRT-THG-2-100	0.7	+60 °C (+140 °F)	50 mm (2 in) wide, 2.5 m (100 in) long

Brackets

SMB18A

- Right-angle mounting bracket with a curved slot for versatile orientation
- 12-ga. stainless steel
- 18 mm sensor mounting hole
- Clearance for M4 (#8) hardware
- CAD Files: DXF, PDF, IGS, STP

Hole center spacing: A to B = 24.2
Hole size: A = ø 4.6, B = 17.0 × 4.6, C = ø 18.5

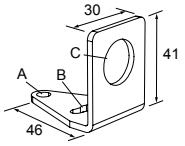

SMBQS18Y

- Die-cast bracket for 18 mm holes
- Includes metal hex nut and lock washer
- Allows ± 8° for cabled sensors
- CAD Files: DXF, PDF, IGS, STP

Hole size: A = ø 15.3

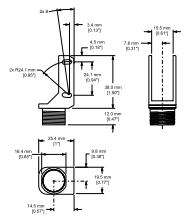

Continued on page 12

© Banner Engineering Corp. All rights reserved.
www.bannerengineering.com

Continued from page 11

SMBQ4X..

- Swivel bracket with tilt and pan movement for precision adjustment
- Easy sensor mounting to extruded rail T-slots
- Metric and inch size bolts are available
- Side mounting of some sensors with the 3 mm screws included with the sensor
- SMBQ4XFA CAD Files: DXF, PDF, IGS, STP
- SMBQ4XFAM10 CAD Files: DXF, PDF, IGS, STP

B = 7 × M3 × 0.5
Bolt thread (A): 3/8 - 16 × 2¼ in for SMBQ4XFA; M10 - 1.5 × 50 for SMBQ4XFAM10; n/a; no bolt included. Mounts directly to 12 mm (½ in) rods for SMBQ4XFMA1

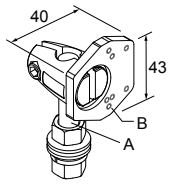

SMB18AFA..

- Protective, swivel bracket with tilt and pan movement for precision adjustment
- Easy sensor mounting to extruded rail T-slots
- Metric and inch size bolts available
- Mounting hole for 18 mm sensors

Hole size: B = ø 18.1

Bolt Thread (A):

SMB18AFA = 3/8 - 16 × 2 in
CAD Files: DXF, PDF, IGS, STP
SMB18AFAM10 = M10 - 1.5 × 50
CAD Files: IGS, STP

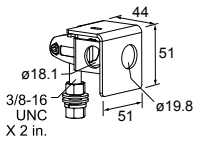

SMB312S

- Stainless steel 2-axis, side-mount bracket
- CAD Files: DXF, PDF, IGS, STP

A = 4.3 × 7.5, B = diam. 3, C = 3 × 15.3

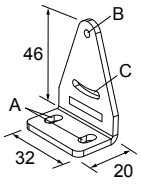

© Banner Engineering Corp. All rights reserved.
www.bannerengineering.com

Chapter Contents

Clean Sensor with Compressed Air Then Isopropyl Alcohol 13
Repairs and Translations (No Field-Replaceable Parts) 13
Contact Us 15
Banner Engineering Corp Limited Warranty 15

Chapter 5 Product Support and Maintenance

Clean Sensor with Compressed Air Then Isopropyl Alcohol

Handle the sensor with care during installation and operation. Sensor windows soiled by fingerprints, dust, water, oil, etc. create stray light that may degrade the peak performance of the sensor.

Blow dust from the sensor using filtered, compressed air. If the sensor is still dirty, gently wipe the sensor with a dry optical cloth. If the dry optical cloth does not remove all residue, use 70% isopropyl alcohol on a clean optical cloth, then dry with a clean dry optical cloth and blow with filtered, compressed air. Do not use any other chemicals for cleaning.

Repairs and Translations (No Field-Replaceable Parts)

English

Contact Banner Engineering for troubleshooting of this device. **Do not attempt any repairs to this Banner device; it contains no field-replaceable parts or components.** If the device, device part, or device component is determined to be defective by a Banner Applications Engineer, they will advise you of Banner's RMA (Return Merchandise Authorization) procedure.

```
IMPORTANT: If instructed to return the device, pack it with care. Damage that occurs in return shipping is not covered by warranty.
```

Obtain assistance with product repairs by contacting your local Banner Engineering Corp distributor or by calling Banner directly at (763) 544-3164. Access literature translated into your native language on the Banner website at www.bannerengineering.com or contact Banner directly at (763) 544-3164.

Deutsch

Wenden Sie sich zur Fehlerbehebung dieses Geräts an Banner Engineering. **Versuchen Sie nicht, Reparaturen an diesem Banner-Gerät vorzunehmen. Das Gerät enthält keine am Einsatzort auszuwechselnden Teile oder Komponenten.** Wenn ein Banner-Anwendungstechniker zu dem Schluss kommt, dass dieses Gerät, ein Teil oder eine Komponente davon defekt ist, erhalten Sie von dem Techniker Erläuterungen zu Banners RMA-Verfahren (Return Merchandise Authorization) für die Warenrückgabe.

```
WICHTIG: Wenn Sie der Techniker anweist, das Gerät zurückzusenden, verpacken Sie es bitte sorgfältig. Transportschäden bei der Rücksendung werden von der Garantie nicht abgedeckt.
```

Unterstützung bei Produktreparaturen erhalten Sie von Ihrem örtlichen Banner Engineering Corp Händler oder direkt von Banner unter Tel. (763) 544-3164. Die in Ihre Muttersprache übersetzte Literatur finden Sie auf der Banner-Website unter www.bannerengineering.com oder kontaktieren Sie Banner direkt unter Tel. (763) 544-3164.

Français

Pour plus d'informations sur le dépannage du produit, contactez Banner Engineering. **Ne tentez pas de réparer ce dispositif Banner. Il ne contient aucun composant ou pièce qui puisse être remplacé sur place.** Si un ingénieur de Banner conclut que le dispositif ou l'une de ses pièces ou composants est défectueux, il vous informera de la procédure à suivre pour le retour des produits (RMA).

```
Important : Si vous devez retourner le dispositif, emballez-le avec soin. Les dégâts occasionnés pendant le transport de retour ne sont pas couverts par la garantie.
```

Pour vous aider lors de la réparation de produits, contactez votre distributeur Banner local our appelez directement Banner au (763) 544-3164. La documentation traduite dans votre langue est disponible sur le site internet de Banner www.bannerengineering.com ou contactez directement Banner au (763) 544-3164.

© Banner Engineering Corp. All rights reserved.
www.bannerengineering.com

Italiano

Per le procedure di individuazione e riparazione dei guasti di questo dispositivo, contattare Banner Engineering. **Non tentare di riparare questo dispositivo Banner, in quanto non contiene parti o componenti sostituibili dall'utente.** Se il dispositivo, una parte del dispositivo o un componente del dispositivo viene riscontrato difettoso da un tecnico Banner, il nostro personale vi comunicherà la procedura da seguire per ottenere l'autorizzazione al reso.

Importante: Se si ricevono istruzioni di rispedire il dispositivo al produttore, imballarlo con cura. I danni dovuti al trasporto non sono coperti dalla garanzia.

Per assistenza nelle riparazioni dei prodotti, contattare il distributore locale Banner Engineering Corp o contattare direttamente Banner al numero (763) 544-3164. È possibile accedere alla documentazione tradotta nella propria lingua madre sul sito Web Banner all'indirizzo www.bannerengineering.com o contattare direttamente Banner al numero (763) 544-3164.

Español

Comuníquese con Banner Engineering para solucionar de problemas de este dispositivo. **No intente ninguna reparación a este dispositivo de Banner, contiene piezas o componente que no se pueden cambiar en terreno.** Si algún ingeniero de aplicaciones de Banner determina que el dispositivo, alguna de las piezas o alguno de los componentes del dispositivo está defectuoso, le informará el procedimiento de autorización de devolución de mercancía (RMA, por sus siglas en inglés) de Banner.

Importante: Si se le solicita devolver el dispositivo, empáquelo con cuidado. Puede haber daños durante el envío de devolución que no estén cubiertos por la garantía.

Para reparaciones de productos, por favor contacte a su distribuidor local de Banner Engineering o llame a Banner directamente al 00 1 (763) 544-3164. Vea la literatura traducida en su idioma en el sitio web Banner en www.bannerengineering.com o comuníquese con Banner directamente al 00 1 (763) 544-3164.

中国人

如需对本装置进行故障排查，请联系邦纳。**请勿尝试自行维修该邦纳装置；本装置不包含任何可在现场更换的部件或组件。** 若经邦纳应用工程师确认设备、设备部件或组件存在缺陷，他们将告知您邦纳退货授权 (RMA) 流程。

重要注意事项： 如被要求退回装置，请妥善包装后寄回。退货运输过程中发生的损坏不在保修范围内。

请联系当地的 Banner Engineering Corp 经销商或直接致电 Banner +1 (763) 544-3164，以获得产品维修帮助。请访问邦纳网站 www.bannerengineering.com 或直接拨打 +1 (763) 544-3164 联系邦纳，获取翻译成您母语的资料。

한국인

이 장치의 문제를 해결하려면 Banner Engineering에 문의하십시오. **이 Banner 장치에는 현장에서 교체할 수 있는 부품 또는 구성품이 없으므로 수리를 시도하지 마십시오.** Banner 애플리케이션 엔지니어가 장치, 장치 부품 또는 장치 구성품에 결함이 있는 것으로 판정하면, Banner의 RMA(제품 반송 승인)절차에 대해 안내해 드립니다.

중요: 제품을 반송하도록 안내 받으셨다면 잘 포장해주십시오. 반송 도중에 발생한 손상은 보증 서비스가 적용되지 않습니다.

제품 수리에 대한 지원은 지역 Banner Engineering Corp 대리점에 문의하거나 Banner에 직접 (763) 544-3164로 문의하실 수 있습니다. 사용자의 모국어로 번역된 자료는 Banner 웹사이트 www.bannerengineering.com에서 액세스하거나 Banner에 직접 (763) 544-3164로 문의하실 수 있습니다.

日本語

この装置のトラブルシューティングについては、バナーエンジニアリングにお問い合わせください。**このバナー装置には、現場では交換できない部品またはコンポーネントが含まれているため、修理を試みてはいけません。** バナーのアプリケーションエンジニアが装置、装置の部品、または装置のコンポーネントに欠陥があると判断した場合、バナーのRMA（返品承認）手続きについてお知らせします。

重要 ： 返品を指示された場合は、装置を丁寧に梱包してください。返品時に発生した破損は保証の対象外となります。

製品の修理については、最寄りのBanner Engineering Corp代理店にお問い合わせいただくか、米国+1 (763) 544-3164まで直接お電話でお問い合わせください。バナーのウェブサイト（www.bannerengineering.com）でお客様の言語に翻訳された資料にアクセスするか、米国+1 (763) 544-3164まで直接お電話でお問い合わせください。

© Banner Engineering Corp. All rights reserved.

čeština

Pro řešení problémů se zařízením kontaktujte společnost Banner Engineering. **Neprovádějte žádné opravy zařízení Banner. Neobsahují žádné komponenty nebo části, které by byly vyměnitelné.** Pokud je zařízení, jeho část nebo díl označen technikem společnosti Banner jako poškozený, bude Vám doporučeno vyplnit reklamační RMA protokol.

```
Důležité: Pokud byl vydán požadavek na vrácení zařízení, pečlivě ho zabalte. Poškození vzniklé
při dopravě není považováno za záruční opravu.
```

Pokud produkt potřebuje opravu, vyžádejte si pomoc od místního distributora společnosti Banner Engineering Corp nebo přímo na telefonním čísle (763) 544-3164. Dokumentaci přeloženou do vašeho jazyka si vyhledejte na webových stránkách společnosti Banner na adrese www.bannerengineering.com nebo se obraťte přímo na společnost Banner na telefonním čísle (763) 544-3164.

Polski

W celu rozwiązania problemów z urządzeniem należy skontaktować się z działem technicznym firmy Banner Engineering. **Pod żadnym pozorem nie próbuj naprawiać tego urządzenia firmy Banner; nie zawiera ono części ani elementów, które można wymieniać samodzielnie.** Jeśli urządzenie, jego część lub element zostaną uznane za wadliwe przez inżyniera technicznego Banner, poinformuje on użytkownika o firmowej procedurze zwrotu towaru (RMA) firmy Banner.

```
Ważne: Jeśli urządzenie ma zostać zwrócone, należy je starannie zapakować. Uszkodzenia powstałe
podczas odsyłki nie są objęte gwarancją.
```

Aby uzyskać pomoc w zakresie naprawy produktu, należy skontaktować się z lokalnym dystrybutorem Banner Engineering Corp lub zadzwonić bezpośrednio do firmy Banner pod numer (763) 544-3164. Dostęp do literatury przetłumaczonej na swój język ojczysty można uzyskać na stronie internetowej firmy Banner pod adresem www.bannerengineering.com lub kontaktując się bezpośrednio z firmą Banner pod numerem (763) 544-3164.

Português

Entre em contato com a Engenharia da Banner para a solução de problemas deste dispositivo. **Não tente fazer nenhum reparo neste dispositivo Banner; ele não contém peças ou componentes substituíveis em campo.** Se um técnico de aplicações da Banner determinar que o dispositivo, peça ou componente do dispositivo está com defeito, ele o informará sobre o procedimento de RMA (Autorização de Devolução de Mercadoria) da Banner.

```
Importante: Se for instruído a devolver o dispositivo, embale-o com cuidado. Os danos ocorridos
no transporte de devolução não são cobertos pela garantia.
```

Obtenha assistência para reparos do produto entrando em contato com o distribuidor local da Banner Engineering Corp ou ligando diretamente para a Banner no telefone (763) 544-3164. Acesse a literatura traduzida para seu idioma nativo no site da Banner em www.bannerengineering.com ou entre em contato diretamente com a Banner pelo telefone (763) 544-3164.

Türkçe

Bu cihazda sorun giderme işlemleri için Banner Engineering ile iletişime geçin. **Bu Banner cihazını onarmaya çalışmayın; cihaz sahada değiştirilebilir parça veya bileşen içermez.** Bir Banner Uygulama Mühendisi tarafından cihazın, cihazın bir parçasının veya bir cihaz bileşeninin kusurlu olduğu tespit edilirse, Banner RMA (İade Mal Yetkilendirme) prosedürü hakkında bilgilendirilirsiniz.

```
ÖNEMLİ: İade etmeniz istenirse, cihazı dikkatli bir şekilde paketleyin. İade nakliyesinde
meydana gelecek hasarlar garanti kapsamında değildir.
```

Yerel Banner Engineering Corp distribütörünüzle iletişime geçerek veya doğrudan (763) 544-3164 numaralı telefondan Banner'ı arayarak ürün onarımlarıyla ilgili yardım alın. Ana dilinize çevrilmiş dokümanlara www.bannerengineering.com adresindeki Banner web sitesinden erişebilir veya (763) 544-3164 numaralı telefondan doğrudan Banner ile iletişime geçebilirsiniz.

Contact Us

Banner Engineering Corp. | 9714 Tenth Avenue North | Plymouth, MN 55441, USA | Phone: + 1 888 373 6767

For worldwide locations and local representatives, visit www.bannerengineering.com.

Banner Engineering Corp Limited Warranty

Banner Engineering Corp. warrants its products to be free from defects in material and workmanship for one year following the date of shipment. Banner Engineering Corp. will repair or replace, free of charge, any product of its manufacture which, at the time it is returned to the factory, is found to have been defective during the warranty period. This warranty does not cover damage or liability for misuse, abuse, or the improper application or installation of the Banner product.

THIS LIMITED WARRANTY IS EXCLUSIVE AND IN LIEU OF ALL OTHER WARRANTIES WHETHER EXPRESS OR IMPLIED (INCLUDING, WITHOUT LIMITATION, ANY WARRANTY OF MERCHANTABILITY OR FITNESS FOR A PARTICULAR PURPOSE), AND WHETHER ARISING UNDER COURSE OF PERFORMANCE, COURSE OF DEALING OR TRADE USAGE.

© Banner Engineering Corp. All rights reserved.
www.bannerengineering.com

This Warranty is exclusive and limited to repair or, at the discretion of Banner Engineering Corp., replacement. **IN NO EVENT SHALL BANNER ENGINEERING CORP. BE LIABLE TO BUYER OR ANY OTHER PERSON OR ENTITY FOR ANY EXTRA COSTS, EXPENSES, LOSSES, LOSS OF PROFITS, OR ANY INCIDENTAL, CONSEQUENTIAL OR SPECIAL DAMAGES RESULTING FROM ANY PRODUCT DEFECT OR FROM THE USE OR INABILITY TO USE THE PRODUCT, WHETHER ARISING IN CONTRACT OR WARRANTY, STATUTE, TORT, STRICT LIABILITY, NEGLIGENCE, OR OTHERWISE.**

Banner Engineering Corp. reserves the right to change, modify or improve the design of the product without assuming any obligations or liabilities relating to any product previously manufactured by Banner Engineering Corp. Any misuse, abuse, or improper application or installation of this product or use of the product for personal protection applications when the product is identified as not intended for such purposes will void the product warranty. Any modifications to this product without prior express approval by Banner Engineering Corp will void the product warranties. All specifications published in this document are subject to change; Banner reserves the right to modify product specifications or update documentation at any time. Specifications and product information in English supersede that which is provided in any other language. For the most recent version of any documentation, refer to: www.bannerengineering.com.

For patent information, see www.bannerengineering.com/patents.

© Banner Engineering Corp. All rights reserved.

LinkedIn

X

Facebook

Instagram



© 2026. All rights reserved.