Features

Sure Cross® K70 Wireless Touch Button combines the best of Banner's popular Touch Button family with its reliable, field-proven, Sure Cross wireless architecture.



- Available in 900 MHz and 2.4 GHz ISM radio frequencies
- Up to three colors in one device
- Rugged, water-resistant IP65 housing with UV-stabilized material
- Bright, uniform indicator segments appear gray when off to eliminate false indications from ambient light
- Excellent immunity to false triggering by water spray, detergents, oils, and other foreign materials
- Ergonomically designed to eliminate hand, wrist, and arm stresses associated with repeated switch operation; requires no physical force to operate

IMPORTANT: Please download the complete K70 Wireless Touch Button technical documentation, available in multiple languages, from www.bannerengineering.com for details on the proper use, applications, Warnings, and installation instructions of this device.

IMPORTANT: Por favor descargue desde www.bannerengineering.com toda la documentación técnica de los K70 Wireless Touch Button, disponibles en múltiples idiomas, para detalles del uso adecuado, aplicaciones, advertencias, y las instrucciones de instalación de estos dispositivos.

IMPORTANT: Veuillez télécharger la documentation technique complète des K70 Wireless Touch Button sur notre site www.bannerengineering.com pour les détails sur leur utilisation correcte, les applications, les notes de sécurité et les instructions de montage.

Models

Housing	Radio Band	Activation Method	Color/Position 1	Color/Position 2	Color/Position 3	Connection
K70	**DXN2**	**T2**	**G**	**R**	**Y**	**Q**
K70	DXN2 = Node 2.4 GHz DXN9 = Node 900 MHz	T2 = Touch	G = Green	R = Red	Y = Yellow	Q = Integral 5-pin M12 male quick-disconnect connector Models with a quick-disconnect connector require a mating cordset

Example model number: **K70DXN9T2GRYQ**

The following models are no longer available for order but are still covered by the information in this document.

Housing	Radio Band	Activation Method	Color/Position 1	Color/Position 2	Color/Position 3	Connection
K70	**DXN2**	**T2**	**G**	**R**	**Y**	**Q**
K70	DXN2 = Node 2.4 GHz DXN9 = Node 900 MHz	T2 = Touch	Blank = None G = Green Y = Yellow R = Red B = Blue W = White			Blank = 2 m (6.5 ft) unterminated 5-wire PVC-jacketed cable Q = Integral 5-pin M12 male quick-disconnect connector QP = 150 mm (6 in) PVC-jacketed cable with a 5-pin M12 male quick-disconnect connector Models with a quick-disconnect connector require a mating cordset

Example model number: **K70DXN9T2GRBQP**

Original Instructions
04-May-26

© Banner Engineering Corp. All rights reserved.
www.bannerengineering.com

189843
p/n: 189843 Rev. I

ПРОМЭЛЕКТРОНИКА/ sales@prom-elec.com

Configuration Instructions

Set the Radio Module DIP Switches

Before applying power to the device, set the radio module's DIP switches. After changing DIP switch positions, cycle power to the device for the changes to take effect.

DIP Switch 1: Radio Transmit Power—The 900 MHz radios have a high output option that will transmit at 500 mW (27 dBm). The low output option transmits at 250 mW (24 dBm). The 250 mW mode reduces the radio's range but improves the battery life in short-range applications. For 2.4 GHz models, this DIP switch is disabled. The transmit power for 2.4 GHz is fixed at about 65 mW EIRP (18 dBm).

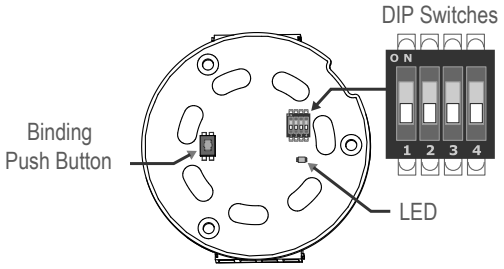

DIP Switch 1	900 MHz Models	2.4 GHz Models
OFF (default)	500 mW (27 dBm) Operation	Disabled
ON	250 mW (24 dBm) Operation	

DIP Switch 2: Touch Button Behavior—Use DIP Switch 2 to set the latching or momentary behavior of the touch button.

DIP Switch 2	900 MHz and 2.4 GHz Models
OFF (default)	Latching—Output toggles between activated and non-activated on successive touches
ON	Momentary—Remains activated while touch is present

DIP Switches 3 and 4: Indicator Mapping—DIP switches 3 and 4 map the activation of the touch button to the one of the indicator light colors/positions to give visual feedback when the touch output is active.

DIP Switches		Touch Button to Indicator Mapping
3	4	
OFF (default)	OFF (default)	Mapped to Color / Position 1
OFF	ON	Mapped to Color / Position 2
ON	OFF	Mapped to Color / Position 3
ON	ON	Mapping disabled

Assembling the K70

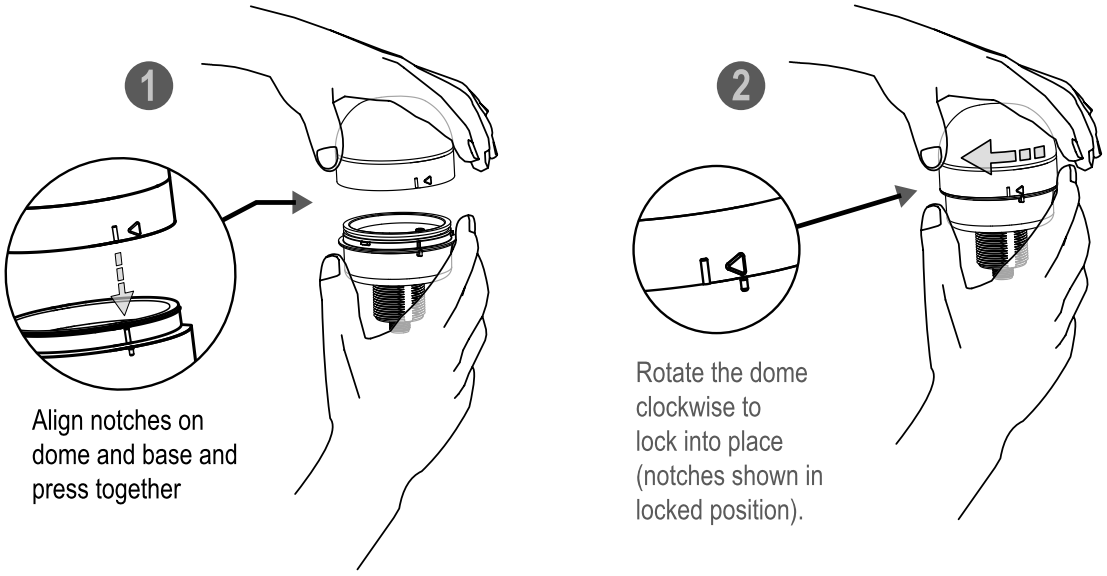

© Banner Engineering Corp. All rights reserved.
www.bannerengineering.com

Wiring Diagrams

Wiring diagram

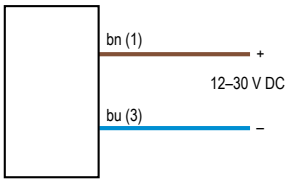

5-pin M12 Male Quick Disconnect Pinout

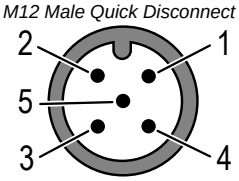

Key:
1 = Brown
3 = Blue

Bind the K70 to the Gateway and Assign the Node Address

Before beginning the binding procedure, apply power to all the devices.

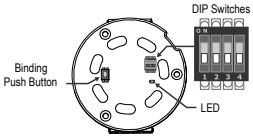

1. Enter binding mode.
   - For housed Gateways, triple-click button 2.
   - For board-level Gateway modules, triple-click the button.
   - For DXMs, under the **ISM Radio** menu, use the down arrow button to highlight the **Binding** menu. Click **ENTER**.

   On the board modules, the green/red LED flashes. On the housed models, both LEDs flash red.
2. Assign the K70 a Node address using the Gateway's rotary dials or the DXM's arrow keys.
   - On a Gateway: Use the left rotary dial for the left digit and the right rotary dial for the right digit. For example, to assign your K70 to Node 01, set the left dial to 0 and the right dial to 1.
   - On the DXM: Use the arrow keys to select the Node ID, then press **ENTER**. The display shows **Binding**.

   Valid Node addresses are 01 through 47.
3. Access the circuit board in the radio module of the K70.
4. Enter binding mode on the K70 by triple-clicking the binding button.
   The bicolor LED flashes alternately while it searches for a Gateway in binding mode. After the K70 is bound, the LED is red and green for four seconds (looks amber), then it flashes four times (looks amber). The K70 automatically exits binding mode, cycles power, and enters Run mode.
5. For DXMs, click **BACK** to exit binding for that specific Node address.
6. Label the Node with the assigned address for future references.
   This makes it easier to identify the physical Node location within a multi-Node network.
7. Reassemble the components back onto the base.
8. Repeat steps 2 through 5 for as many K70 Wireless Touch Buttons as are needed for your network.
9. After binding all K70s, exit binding mode on the Gateway.
   - For housed Gateways, double-click button 2.
   - For board-level Gateway modules, double-click the button.
   - For DXM models, click **BACK** until you return to the main menu.

LED Behavior for the One LED Nodes

Nodes do not sample inputs until they are communicating with the Gateway. The radios and antennas must be a minimum distance apart to function properly.

Recommended minimum distances are:

900 MHz radio transmitting at ≤ 250 mW: 6 feet
900 MHz radios transmitting at ≥ 500 mW: 15 feet
2.4 GHz radios transmitting at 65 mW: 1 foot

LED (Bi-color)	Node Status
Flashing green	Radio link okay
Green and red flashing alternately	In Binding mode
Both colors are solid for 4 seconds, then flash 4 times; looks amber	Binding mode is complete
Flashing red, once every 3 seconds	Radio link error
Flashing red, once every second	Device error

© Banner Engineering Corp. All rights reserved.
www.bannerengineering.com

DX80 Performance Configuration Software

The configuration software offers an easy way to link I/O points in your wireless network, view I/O register values, and set system communication parameters when a host system is not part of the wireless network. The software runs on any computer with the Windows Vista, Windows 7, Windows 8, or Windows 10 operating system.

Device Configuration screen

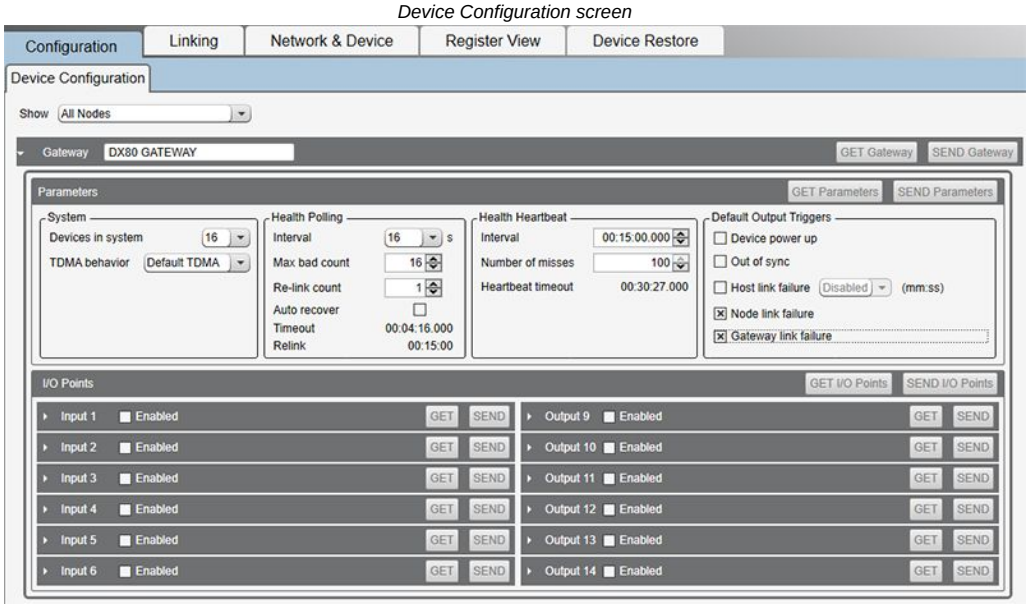

Use a USB to RS-485 adapter cable to connect a standalone DX80 Gateway to the computer. For DXM Controllers with an internal DX80 radio, connect a computer to the DXM Controller using the supplied USB or Ethernet connection. Download the most recent revisions of the configuration software from Banner Engineering's website: https://www.bannerengineering.com/us/en/products/wireless-sensor-networks/reference-library/software.html.

The USB to RS-485 adapter cable is not required for the DXM Controller. For standalone DX80 Gateway devices use:

- USB to RS-485 adapter cable model **BWA-UCT-900** for 1 Watt radios
- USB to RS-485 adapter cable model **BWA-HW-006** for all other radios

Creating Flash Patterns

Use the DX80 Performance Configuration Software to create the flash pattern.

To create a flash pattern:

1. Enable the appropriate output if it is not yet enabled.
2. Click **GET** to download the input/output current configuration from the device to the configuration software. This automatically populates the Output configuration settings specific to the Node type.
3. For this example, configure output 9 is enabled and configured as discrete output 1 (color 1 for this K70 light). Different models may use distinct output types and I/O configuration values.
4. Define the flash pattern by selecting the appropriate checkboxes in the **Flash Pattern** section. In this example, the light will flash twice a second.
5. Click **SEND** to upload the configuration to the device.

© Banner Engineering Corp. All rights reserved.
www.bannerengineering.com

Defining a flash pattern for discrete output 1

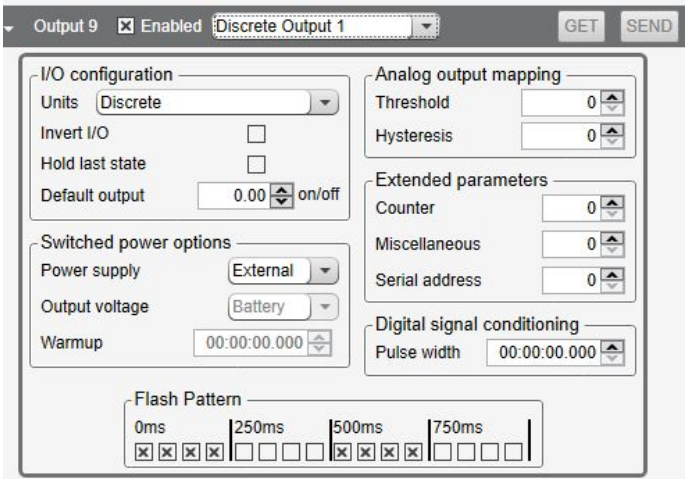

Latch/Toggle for Host Systems or Scripting

For most models, use the DIP switches to set latch and toggle modes. Not all models have a DIP switch setting for Latch mode. If your model does not have those DIP switch settings, use the DX80 Performance Configuration Software to enable latch or toggle inputs.

1. Set the DIP switch to allow the DX80 Performance Configuration Software to configure the device and ignore the DIP switch settings.
2. Connect the Gateway to the computer with the software installed and launch the software.
    a. Click **Device › Connection Settings**.
    b. Select appropriate connection type (**Serial** or **TCP**).
    c. Select the correct COMM port or enter the IP Address and click **Connect**.
3. Go to **Configuration › Device Configuration**.
4. For the Node you are configuring, click **GET Node** to load all of that Node's parameter settings.
5. Click on the arrow next to the Node to expand the list of that Node's inputs and outputs.
6. For the specific input, click on the arrow next to the input number to expand those parameters.
7. Under the **Serial options** section, select **Latch** or **Toggle** or **None** (momentary) in the **Sync Counter**'s drop-down list.
8. Click **SEND Node** to send the changes to that Node's parameters to the network.

Latch

After an input is activated (set to 1) with a button press or using the messages, the input remains at 1 until cleared or alternated by writing to I/O 15. Latching prevents a successive button press from setting the input to 0.

Toggle

The input toggles between 0 and 1 with successive button pushes or touches. Write to I/O 15 to clear the toggle or to alternate the current state of the toggle.

To change the latch/toggle register value using a host system, write the following to the Node's I/O point 15:

Latch/toggle register values

	Write this decimal value	
For I/O point	To clear the register value	To alternate the state of the latch/toggle register value
1	5377	5505
2	5378	5506
3	5380	5508
4	5384	5512
5	5392	5520
6	5408	5536
All Points	5439	5567

IMPORTANT: DO NOT write these values to I/O 15 if the device is used in momentary mode.

© Banner Engineering Corp. All rights reserved.
www.bannerengineering.com

K70 Wireless Touch Button Modbus Registers

I/O	Modbus Holding Register		I/O Type	I/O Range		Holding Register Representation (Dec.)		Color #
	Gateway	Any Node		Min.	Max.	Min.	Max.	
1	1	1 + (Node# × 16)	Touch Input 1	0	1	0	1	
7	7	7 + (Node# × 16)	Reserved					
8	8	8 + (Node# × 16)	Device Message					
9	9	9 + (Node# × 16)	Discrete OUT 9	0	1	0	1	Color 1
10	10	10 + (Node# × 16)	Discrete OUT 10	0	1	0	1	Color 2
11	11	11 + (Node# × 16)	Discrete OUT 11	0	1	0	1	Color 3
15	15	15 + (Node# × 16)	Control Message					
16	16	16 + (Node# × 16)	Reserved					

Use the DX80 Performance Configuration Software to define unique synchronous flash patterns for the lights.

K70 Wireless Touch Button Specifications

Supply Voltage

12 to 30 V DC (Outside the USA: 12 V DC to 24 V DC, ± 10%) [(1)]

900 MHz Consumption: Maximum current draw is < 40 mA and typical current draw is < 30 mA at 24 V DC. (2.4 GHz consumption is less.)

Supply Current

< 220 mA maximum current at 12 V DC

< 110 mA maximum current at 30 V DC

Supply Protection Circuitry

Protected against transient voltages

Construction

Polycarbonate

Connections

Integral 5-pin M12 male quick-disconnect connector; 150 mm (6 in) PVC-jacketed cable with a 5-pin M12 male quick-disconnect connector; or a 2 m (6.5 ft) unterminated 5-wire PVC-jacketed cable depending on the model ordered

Operating Conditions

–40 °C to +50 °C (–40 °F to +122 °F)

95% at +50 °C maximum relative humidity (non-condensing)

Environmental Rating

IP65

Vibration and Mechanical Shock

Vibration: 10 Hz to 55 Hz, 0.5 mm peak-to-peak amplitude per IEC 60068-2-6

Shock: 15G 11 ms duration, half sine wave per IEC 60068-2-27

Indicator Response Time

Off Response: 150 µs (maximum) at 12 to 30 V DC

On Response: 180 ms (maximum) at 12 V DC; 50 ms (maximum) at 30 V DC

Indicators

1 to 3 colors depending on model: Green, Red, Yellow, Blue, and White

LEDs are independently selected

[(1)] For European applications, power this device from a Limited Power Source as defined in EN 60950-1.

Radio Range

A 2 dB antenna ships with this device.

Transmit power and range are subject to many factors, including antenna gain, installation methods, characteristics of the application, and environmental conditions.

Please refer to the following documents for installation instructions and high-gain antenna options.

Installing Your Sure Cross® Radios (151514)
Conducting a Site Survey (133602)
Sure Cross® Antenna Basics (132113)

900 MHz Compliance (SX7023EXT Radio Module)

Radio module is indicated by the product label marking

Contains FCC ID: UE3SX7023EXT

Contains IC: 7044A-SX7023EXT

2.4 GHz Compliance (SX243 Radio Module)

Radio module is indicated by the product label marking

Contains FCC ID: UE3SX243

Radio Equipment Directive (RED) 2014/53/EU

Contains IC: 7044A-SX243

Antenna Separation Distance

900 MHz radios transmitting at ≥ 500 mW: 4.57 m (15 ft) with the supplied antenna

2.4 GHz radios transmitting at 65 mW: 0.3 m (1 ft) with the supplied antenna

Radiated Immunity HF

10 V/m (EN 61000-4-3)

Spread Spectrum Technology

FHSS (Frequency Hopping Spread Spectrum)

Link Timeout (Performance)

Gateway: Configurable via User Configuration Software

Node: Defined by Gateway

© Banner Engineering Corp. All rights reserved.
www.bannerengineering.com

Certifications

CE/UKCA approval only applies to 2.4 GHz models

Banner Engineering BV
Park Lane, Culliganlaan 2F bus 3
1831 Diegem, BELGIUM

03737-22-04042

Required Overcurrent Protection

WARNING: Electrical connections must be made by qualified personnel in accordance with local and national electrical codes and regulations.

Overcurrent protection is required to be provided by end product application per the supplied table.

Overcurrent protection may be provided with external fusing or via Current Limiting, Class 2 Power Supply.

Supply wiring leads < 24 AWG shall not be spliced.

For additional product support, go to www.bannerengineering.com.

Supply Wiring (AWG)	Required Overcurrent Protection (A)	Supply Wiring (AWG)	Required Overcurrent Protection (A)
20	5.0	26	1.0
22	3.0	28	0.8
24	2.0	30	0.5

FCC Part 15 Class A for Intentional Radiators

This equipment has been tested and found to comply with the limits for a Class A digital device, pursuant to Part 15 of the FCC Rules. These limits are designed to provide reasonable protection against harmful interference when the equipment is operated in a commercial environment. This equipment generates, uses, and can radiate radio frequency energy and, if not installed and used in accordance with the instruction manual, may cause harmful interference to radio communications. Operation of this equipment in a residential area is likely to cause harmful interference in which case the user will be required to correct the interference at his own expense.

(Part 15.21) Any changes or modifications not expressly approved by the party responsible for compliance could void the user's authority to operate this equipment.

Industry Canada Statement for Intentional Radiators

This device contains licence-exempt transmitters(s)/receiver(s) that comply with Innovation, Science and Economic Development Canada's licence-exempt RSS(s). Operation is subject to the following two conditions:

1. This device may not cause interference.
2. This device must accept any interference, including interference that may cause undesired operation of the device.

Cet appareil contient des émetteurs/récepteurs exemptés de licence conformes à la norme Innovation, Sciences, et Développement économique Canada. L'exploitation est autorisée aux deux conditions suivantes:

1. L'appareil ne doit pas produire de brouillage.
2. L'utilisateur de l'appareil doit accepter tout brouillage radioélectrique subi, même si le brouillage est susceptible d'en compromettre le fonctionnement.

ANATEL

Este equipamento não tem direito à proteção contra interferência prejudicial e não pode causar interferência em sistemas devidamente autorizados. Para maiores informações, consulte o site da ANATEL www.gov.br/anatel/pt-br/

K70 Dimensions

All measurements are listed in millimeters [inches], unless noted otherwise. The measurements provided are subject to change.

© Banner Engineering Corp. All rights reserved.
www.bannerengineering.com

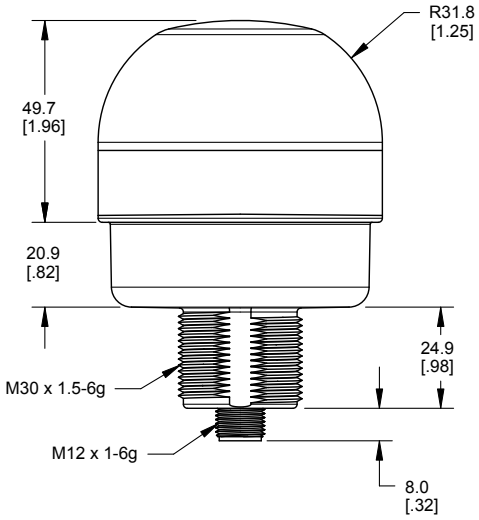

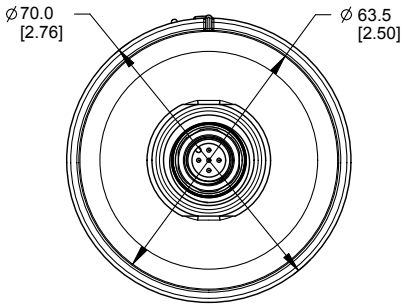

Accessories

Cordsets

All measurements are listed in millimeters [inches], unless noted otherwise. The measurements provided are subject to change.

5-Pin Single-Ended M12 Female Cordsets				
Model	**Length**	**Style**	**Dimensions**	**Pinout (Female)**
MQDC1-501.5	0.5 m (1.5 ft)	Straight	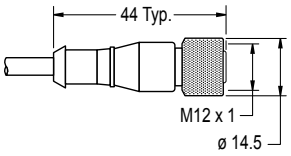	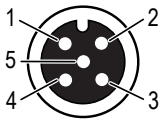
MQDC1-503	0.9 m (2.9 ft)			
MQDC1-506	2 m (6.5 ft)			
MQDC1-515	5 m (16.4 ft)			
MQDC1-530	9 m (29.5 ft)			
MQDC1-560	18 m (59 ft)			
MQDC1-5100	31 m (101.7 ft)			
MQDC1-506RA	2 m (6.5 ft)	Right-Angle	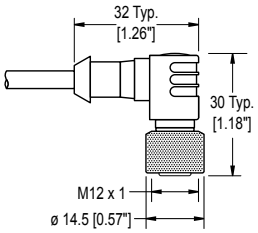	1 = Brown 2 = White 3 = Blue 4 = Black 5 = Gray
MQDC1-515RA	5 m (16.4 ft)			
MQDC1-530RA	9 m (29.5 ft)			
MQDC1-560RA	19 m (62.3 ft)			

Brackets

All measurements are listed in millimeters, unless noted otherwise. The measurements provided are subject to change.

LMB30LP

- Low profile
- 30 mm mounting hole
- 300 series stainless steel
- CAD Files: DXF, PDF, IGS, STP

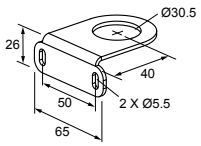

© Banner Engineering Corp. All rights reserved.
www.bannerengineering.com

SMB30A

- Right-angle bracket with curved slot for versatile orientation
- Clearance for M6 (¼ in) hardware
- Mounting hole for 30 mm sensor
- 12-gauge stainless steel
- CAD Files: DXF, PDF, IGS, STP

Hole center spacing: A to B=40
Hole size: A=ø 6.3, B= 27.1 × 6.3, C=ø 30.5

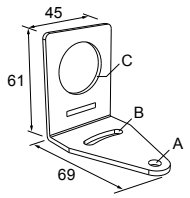

SMB30MM

- 12-gauge stainless steel bracket with curved mounting slots for versatile orientation
- Clearance for M6 (¼ in) hardware
- Mounting hole for 30 mm sensor
- CAD Files: DXF, PDF, IGS, STP

Hole center spacing: A=51, A to B=25.4
Hole size: A=42.6 × 7, B=ø 6.4, C=ø 30.1

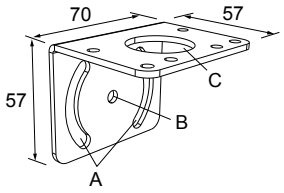

SMBAMS30P

- Flat SMBAMS series bracket
- 30 mm hole for mounting sensors
- Articulation slots for 90°+ rotation
- 12-gauge 300 series stainless steel
- CAD Files: DXF, PDF, IGS, STP

Hole center spacing: A=26.0, A to B=13.0
Hole size: A=26.8 × 7.0, B=ø 6.5, C=ø 31.0

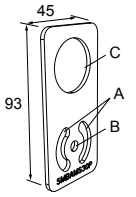

SSA-MBK-EEC1

- Single 30 mm hole
- 8 gauge steel, black finish (powder coat)
- Front surface for customer-applied labels
- CAD Files: DXF, PDF, IGS, STP

Hole size: A = ø 7 , B = ø 30

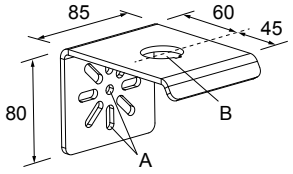

Banner Engineering Corp Limited Warranty

Banner Engineering Corp. warrants its products to be free from defects in material and workmanship for one year following the date of shipment. Banner Engineering Corp. will repair or replace, free of charge, any product of its manufacture which, at the time it is returned to the factory, is found to have been defective during the warranty period. This warranty does not cover damage or liability for misuse, abuse, or the improper application or installation of the Banner product.

THIS LIMITED WARRANTY IS EXCLUSIVE AND IN LIEU OF ALL OTHER WARRANTIES WHETHER EXPRESS OR IMPLIED (INCLUDING, WITHOUT LIMITATION, ANY WARRANTY OF MERCHANTABILITY OR FITNESS FOR A PARTICULAR PURPOSE), AND WHETHER ARISING UNDER COURSE OF PERFORMANCE, COURSE OF DEALING OR TRADE USAGE.

This Warranty is exclusive and limited to repair or, at the discretion of Banner Engineering Corp., replacement. **IN NO EVENT SHALL BANNER ENGINEERING CORP. BE LIABLE TO BUYER OR ANY OTHER PERSON OR ENTITY FOR ANY EXTRA COSTS, EXPENSES, LOSSES, LOSS OF PROFITS, OR ANY INCIDENTAL, CONSEQUENTIAL OR SPECIAL DAMAGES RESULTING FROM ANY PRODUCT DEFECT OR FROM THE USE OR INABILITY TO USE THE PRODUCT, WHETHER ARISING IN CONTRACT OR WARRANTY, STATUTE, TORT, STRICT LIABILITY, NEGLIGENCE, OR OTHERWISE.**

Banner Engineering Corp. reserves the right to change, modify or improve the design of the product without assuming any obligations or liabilities relating to any product previously manufactured by Banner Engineering Corp. Any misuse, abuse, or improper application or installation of this product or use of the product for personal protection applications when the product is identified as not intended for such purposes will void the product warranty. Any modifications to this product without prior express approval by Banner Engineering Corp will void the product warranties. All specifications published in this document are subject to change; Banner reserves the right to modify product specifications or update documentation at any time. Specifications and product information in English supersede that which is provided in any other language. For the most recent version of any documentation, refer to: www.bannerengineering.com.

For patent information, see www.bannerengineering.com/patents.

Notas Adicionales (con Antena)

Información México: La operación de este equipo está sujeta a las siguientes dos condiciones: 1) es posible que este equipo o dispositivo no cause interferencia perjudicial y 2) este equipo debe aceptar cualquier interferencia, incluyendo la que pueda causar su operación no deseada.

Banner es una marca registrada de Banner Engineering Corp. y podrán ser utilizadas de manera indistinta para referirse al fabricante. "Este equipo ha sido diseñado para operar con las antenas tipo Omnidireccional para una ganancia máxima de antena de 6 dBd y Yagi para una ganancia máxima de antena 10 dBd que en seguida se enlistan. También se incluyen aquellas con aprobación ATEX tipo Omnidireccional siempre que no excedan una ganancia máxima de antena de 6dBd. El uso con este equipo de antenas no incluidas en esta lista o que tengan una ganancia mayor que 6 dBd en tipo omnidireccional y 10 dBd en tipo Yagi, quedan prohibidas. La impedancia requerida de la antena es de 50 ohms."

Approved Antennas

BWA-9O2-C--Antena, Omni 902-928 MHz, 2 dBd, junta de caucho, RP-SMA Macho
BWA-9O5-C--Antena, Omni 902-928 MHz, 5 dBd, junta de caucho, RP-SMA Macho
BWA-9O6-A--Antena, Omni 902-928 MHz, 6 dBd, fibra de vidrio, 1800mm, N Hembra
BWA-9Y10-A--Antena, Yagi, 900 MHz, 10 dBd, N Hembra

Mexican Importer

Banner Engineering de Mèxico, S. de R.L. de C.V. | David Alfaro Siqueiros 103 Piso 2 Valle oriente | San Pedro Garza Garcia Nuevo Leòn, C. P. 66269

© Banner Engineering Corp. All rights reserved.
www.bannerengineering.com

81 8363.2714

© Banner Engineering Corp. All rights reserved.
www.bannerengineering.com