EZ-SCREEN AC Interface Box

Original Instructions
p/n: 120321 Rev. G
January 17, 2024
© Banner Engineering Corp. All rights reserved.

ПРОМЭЛЕКТРОНИКА/ sales@prom-elec.com

Contents

Chapter 1 EZAC Features

EZAC Models 3
EZAC Overview 4
EZAC Indicators 4

Chapter 2 EZAC Configuration 5

Chapter 3 Installation Instructions

EZAC Mechanical Installation 7
EZAC Electrical Installation 7
EZAC Connection to the Guarded Machine 7
EZAC Wiring Diagrams Introduction 10

Chapter 4 Checkout Procedures

EZAC Initial Checkout Procedure 19
EZAC Periodic Checkout Procedure 20

Chapter 5 EZAC Specifications

EZAC Dimensions 22

Chapter 6 Accessories

EZ-SCREEN Safety Light Screen Receiver and Emitter Cordsets 23
Splitter Cables (for Q8 emitters and receivers) 23
Double-Ended Cables (for Q8 emitters and receivers) 24
Single-Ended Cables (for separate SLSE..Q8 emitter connection) 24
Double-Ended Cables (for SLSE..Q5 emitter with TEST connection) 25
Single-Ended Cables (for SLSE..Q5 emitter connection) 25
EZAC Power and Input/Output Cordsets 25
Power Cordsets 25
Input/Output Cordsets 26

Chapter 7 Product Support and Maintenance

Repairs 27
EZAC Replacement Parts 27
Banner Engineering Corp Limited Warranty 28

Chapter Contents

EZAC Models 3
EZAC Overview 4

Chapter 1 EZAC Features

EZAC Series for use with Type 4 Emitters and Receivers

Emitter only models	*Emitter/receiver models*	
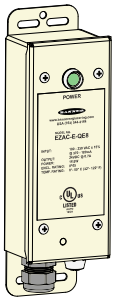	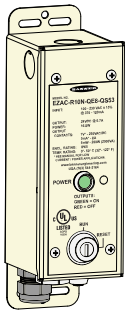	• AC power supply for use with EZ-SCREEN Safety Light Screen sensors. Models EZAC-R.. interface with up to three receivers or two cascaded emitter/receiver pairs; models EZAC-E.. power up to four emitters • Supplies +24 V DC power at 0.7 amps (16.8 W maximum power) • Accepts input voltages from 100 to 250 V AC (50 to 60 Hz) • Models available with external device monitoring (EDM)—see Models table Key reset switch on EZAC-R.. models (Receiver/ Pair models) • Replaceable relay module with 8 Amp / 250 V AC/DC safety output contacts (models EZAC-R.. only) • IP65 metal housing • Mounts directly onto sensor housing (hardware included) • Emitter models available for 8-pin (no Test input available) emitter connections • Easy QD receiver and emitter hookup • Easy QD or hard-wired power and output/EDM connections (depending on model)

EZAC Models

Emitter/Receiver Models	Outputs	EDM	Emitter/Receiver Connection	AC Power Connection	Output and EDM Connections
EZAC-R9-QE8	3 N.O.	Selectable 1- or 2-Channel or no EDM	8-Pin M12 QD	Hard-wired	Hard-wired
EZAC-R11-QE8	2 N.O., 1 N.C.				
EZAC-R15A-QE8-QS83	1 N.O. + 1 SPDT (Form C)	1-Channel		3-pin 7/8 in-16UNF QD	8-pin 7/8 in-16UNF QD
EZAC-R8N-QE8-QS53	1 N.O., 1 N.C.	Power Monitoring		3-pin 7/8 in-16UNF QD	5-pin 7/8 in-16UNF QD
EZAC-R10N-QE8-QS53	2 N.O.				

Emitter-Only Models,	For Emitter Models	Emitter Connection	AC Power Connection
EZAC-E-QE8 (obsolete)	SLSE..-..Q8 (without Test input)	8-Pin M12 QD	Hard-wired
EZAC-E-QE5 (obsolete)	SLSE..-..Q5 (with Test input)	5-Pin M12 QD	
EZAC-E-QE8-QS3	SLSE..-..Q8 (without Test input)	8-Pin M12 QD	3-Pin 7/8 in-16UNF QD
EZAC-E-QE5-QS5 (obsolete)	SLSE..-..Q5 (with Test input)	5-Pin M12 QD	5-Pin 7/8 in-16UNF QD

Models noted as obsolete are no longer available for order but are still covered by the information in this document.

© Banner Engineering Corp. All rights reserved.

EZAC Overview

WARNING:

- **Not a stand-alone point-of-operation guarding device**
- This Banner Engineering Corp. device is not a stand-alone point-of-operation guarding device, as defined by OSHA regulations. Failure to install point-of-operation guards on hazardous machinery can result in a dangerous condition that could lead to serious injury or death.
- Install point-of-operation guarding devices, such as safety light curtains and/or hard guards, to protect personnel from hazardous machinery.

The EZ-SCREEN AC Interface Box (EZAC Series) is powered by 100 to 250 V AC. EZAC-R.. models can supply one EZ-SCREEN receiver, a single emitter-receiver pair, or two cascaded emitter-receiver pairs. Emitter-only models (EZAC-E..) can supply up to four cascaded emitters, and have no output circuitry.

The integrated interface module, located on a replaceable PC-board, converts the EZ-SCREEN receiver OSSD output signals into isolated redundant output channels with an 8 amp / 250 V AC/DC switching capacity for AC or DC safety circuits. The outputs of the interface module follow the action of the EZ-SCREEN OSSD outputs, with a 10 millisecond response time in turning OFF, and approximately 10 millisecond delay in turning ON. All models feature external device monitoring (EDM) in the form of 1-Ch, 2-Ch or power monitoring.

All models have one 8-pin M12 QD to connect to the EZ-SCREEN receiver or emitter. Other connections are dependent on model. Hookups, therefore, are also model-dependent; see "EZAC Wiring Diagrams Introduction" on page 10. See "Accessories" on page 23 for cabling options.

EZAC Indicators

A bicolor LED indicates the output contact status of internal relays K1 and K2. (Emitter-only models have a green Power on/off indicator.)

LED Status	Power	K1 and K2	N.O. Output	N.C. Output	Light Screen
Green	On	Energized	Closed	Open	Clear and reset
Red	On	De-energized	Open	Closed	Blocked, latched, or locked out
OFF	No AC power	De-energized	Open	Closed	Off

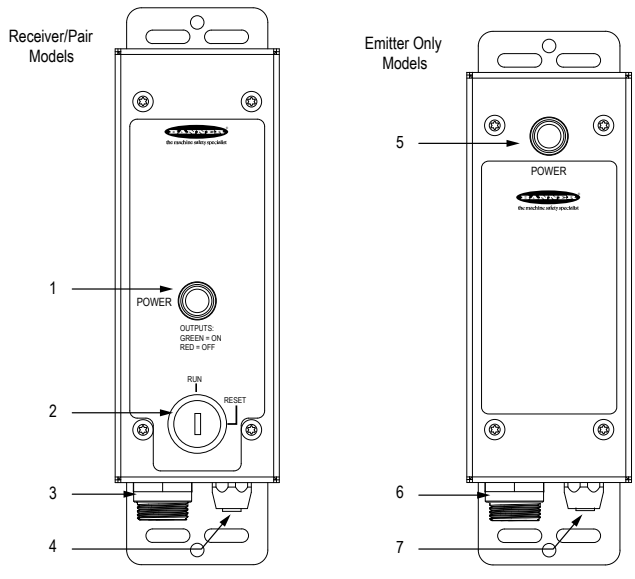

1. Green/Red LED Status Indicator
2. Keyed Reset Switch
3. QD or Cable Ports (x2)
4. Receiver/Emitter Connections
5. Green LED Power Indicator (only)
6. QD or Cable Port
7. Emitter Connections

© Banner Engineering Corp. All rights reserved.

Chapter Contents

Chapter 2 EZAC Configuration

Models EZAC-R9-QE8 and EZAC-R11-QE8 can be configured for 1-Channel, 2-Channel, or No EDM. The EDM slide switch setting must match the EZ-SCREEN receiver's DIP switch setting. For example, if the slide switch is set for "EDM 1-CH," then "E1" must be selected on the EZ-SCREEN receiver.

Models EZAC-R8N-QE8-QS53, EZAC-R10N-QE8-QS53, and EZAC-R15A-QE8-QS53 are preconfigured. However, the EZ-SCREEN receiver's DIP switch setting must still match the EZAC Interface EDM setting:

EZAC-R8N-QE8-QS53 – No EDM; EZ-SCREEN configuration – E2 (default)
EZAC-R10N-QE8-QS53 – No EDM; EZ-SCREEN configuration – E2 (default)
EZAC-R15A-QE8-QS53 – 1-Channel EDM; EZ-SCREEN configuration – E1

See the EZ-SCREEN manual (p/n 112852) for additional information.

Inside cover – EZAC-E.. hard-wired models

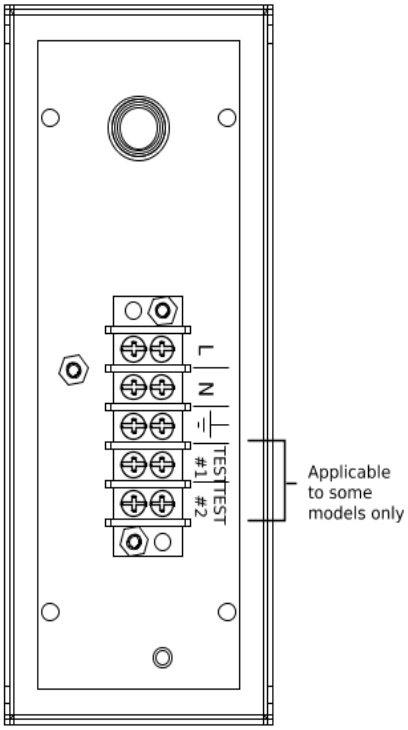

Internal board layout -- EZAC-R models

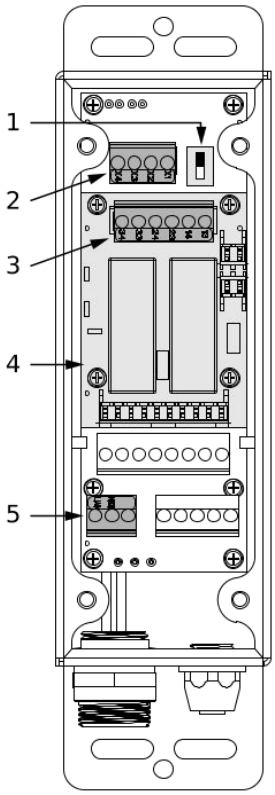

1. EDM Switch
2. External Device Monitoring
3. Outputs
4. Relay Module
5. Power

© Banner Engineering Corp. All rights reserved.

Blank page

Chapter Contents

EZAC Mechanical Installation 7
EZAC Electrical Installation 7

Chapter 3 Installation Instructions

EZAC Mechanical Installation

Mount the module in a convenient location that is free from heavy impulse force and high-amplitude vibration. The module and any auxiliary Reset switches must be located outside the guarded area, where the switch operator has a full unobstructed view of the entire guarded area and any associated hazards as the reset is performed. The module and any auxiliary reset switch(es) must not be reachable from within the guarded area and must be protected (through the use of rings or guards, for example) against unauthorized or inadvertent operation. Refer *Dimensions* for dimensions and mounting hole locations.

The module is designed for mounting directly to the emitter or receiver housing, if desired. The module meets IEC IP65 standards; an additional enclosure or cabinet is not required.

EZAC Electrical Installation

WARNING:

- **Electrical Shock Hazard**
- **Failure to follow these instructions could result in serious injury or death.**
- Electrical shock hazard exists when the EZ-SCREEN AC Interface Box has power applied to it and the box cover is open. Use extreme caution to avoid electrical shock during installation or servicing, or when the box cover is open to change the switch configuration or replace the relay board module.
- Always disconnect all power from the box and the guarded machine before making any connections, replacing any component, or before opening the enclosure housing of the box.

The connection for a particular box is dependent on the model. For models with EDM, this should be configured before the initial checkout and use of the light screen. EDM is configured via a combination of the electrical hookup and a sliding switch inside the box (depending on model).

All EZAC-R.. models have one 8-pin M12 QD to connect to the EZ-SCREEN receiver and/or emitter. QD models have one 3-pin 7/8 in-16UNF QD for power and ground input, plus a 7/8 in-16UNFI/O connector (either 8-pin or 5-pin, depending on model) to connect to the safety outputs and monitoring contacts (i.e., EDM). Non-QD (hard-wired) models have two holes with 1/2-inch NPT threads to accommodate conduit fitting or cable gland and hard-wire cables (two cable glands and one hole plug included with box).

EZAC-E.. models have one (8-pin) M12 QD to connect to the emitter, plus a 3-pin 7/8 in-16UNF connector for power and ground. Hard-wired emitter models have one hole and one cable gland.

EZAC Connection to the Guarded Machine

The wiring diagrams in "EZAC Wiring Diagrams Introduction" on page 10 show a generic connection of two safety output channels of the models EZAC-R.. AC Interface box to machine primary control elements MPCE1 and MPCE2. A machine primary control element is an electrically powered device, external to the box, which stops the machinery being controlled by immediately removing electrical power from the machine and (when necessary) by applying braking to dangerous motion.

CAUTION:

- **Incomplete installation information**
- Many installation considerations necessary to properly apply these devices are not covered by this document.
- Refer to the appropriate device installation instructions to ensure the safe application of the device.

© Banner Engineering Corp. All rights reserved.

WARNING:

- Not for Use as a Stand-Alone Safety Module
- Failure to properly connect the EZAC box to a control-reliable Primary Safety Device could result in serious injury or death.
- The EZAC box does not have the circuitry required to perform a self-check. A single fault inside the unit or in external devices (like switches or E-stop buttons) can go undetected and create an unsafe condition.
- DO NOT connect E-stop switches, 2-hand control switches, safety interlock switches, or similar devices directly to this interface module.
- Always connect pins 2 and 3 of the receiver/emitter M12/Euro-style QD connection to the monitoring input of the Primary Safeguarding Device that controls it.

WARNING:

- **Risk of electric shock**
- Use extreme caution to avoid electrical shock. Serious injury or death could result.
- Always disconnect power from the safety system (for example, device, module, interfacing, etc.), guarded machine, and/or the machine being controlled before making any connections or replacing any component. Lockout/tagout procedures might be required. Refer to OSHA 29CFR1910.147, ANSI Z244-1, or the applicable standard for controlling hazardous energy.
- Make no more connections to the device or system than are described in this manual. Electrical installation and wiring must be made by a Qualified Person[1] and must comply with the applicable electrical standards and wiring codes, such as the NEC (National Electrical Code), NFPA 79, or IEC 60204-1, and all applicable local standards and codes.

CAUTION: Ensure Proper Monitoring—The primary safeguarding system must be capable of external device monitoring of the EZAC-R.. models, and employ a Normally Open Reset contact. Thus, the EZ-SCREEN AC Interface Box is not intended to be used with EZSCREEN Type 2 (model numbers LS2..).

[1] A person who, by possession of a recognized degree or certificate of professional training, or who, by extensive knowledge, training and experience, has successfully demonstrated the ability to solve problems relating to the subject matter and work.

© Banner Engineering Corp. All rights reserved.

Emitter and Receiver Models: Connection to EZ-SCREEN

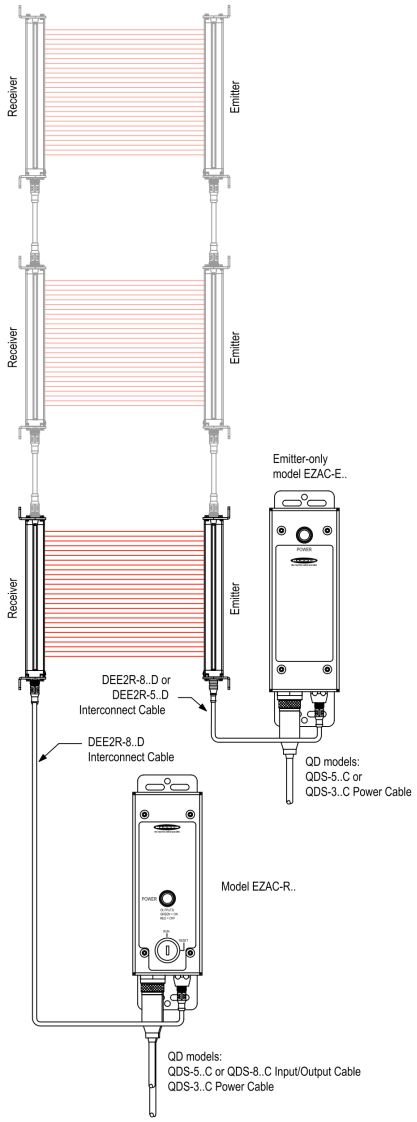

8-pin Receiver and Emitter Connections

Pin	Color	Receiver Function	Emitter Function
1	Brown	+24 V DC	+24 V DC
2	Orange/Black	EDM #2	No connection (n.c.)
3	Orange	EDM #1	No connection (n.c.)
4	White	OSSD #2	No connection (n.c.)
5	Black	OSSD #1	No connection (n.c.)
6	Blue	0 V DC	0 V DC
7	Green/Yellow	GND/PE	GND/PE
8	Violet	Reset	No connection (n.c.)

© Banner Engineering Corp. All rights reserved.

Emitter-only Models: Connection to EZ-SCREEN

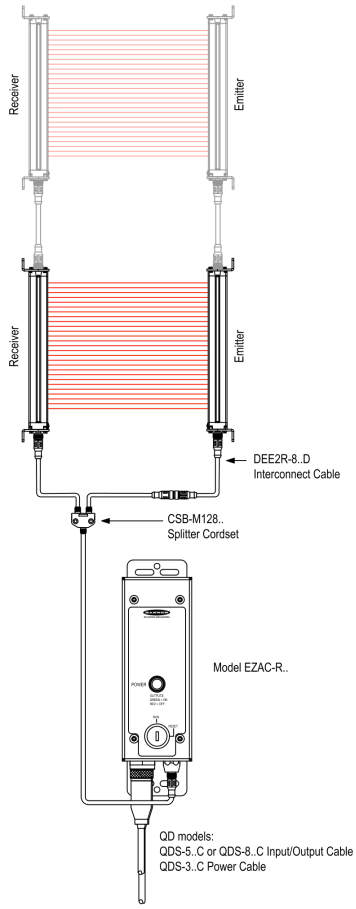

5-pin Emitter-Only Connection

Pin	Color	Function
1	Brown	+24 V DC
2	White	Test #2
3	Blue	0 V DC
4	Black	Test #1
5	Green/Yellow	GND/PE

EZAC Wiring Diagrams Introduction

WARNING:

- **Risk of electric shock**
- Use extreme caution to avoid electrical shock. Serious injury or death could result.
- Always disconnect power from the safety system (for example, device, module, interfacing, etc.), guarded machine, and/or the machine being controlled before making any connections or replacing any component. Lockout/tagout procedures might be required. Refer to OSHA 29CFR1910.147, ANSI Z244-1, or the applicable standard for controlling hazardous energy.
- Make no more connections to the device or system than are described in this manual. Electrical installation and wiring must be made by a Qualified Person[(1)] and must comply with the applicable electrical standards and wiring codes, such as the NEC (National Electrical Code), NFPA 79, or IEC 60204-1, and all applicable local standards and codes.

WARNING:

- **Live Voltage**
- **Failure to follow these instructions could result in serious injury or death.**
- Even when EZAC box power is OFF, dangerous voltage could be present via voltage connected to outputs.
- Properly terminate pin 8 of the output connector (N.C. Aux output) if it is not used.

[(1)] A person who, by possession of a recognized degree or certificate of professional training, or who, by extensive knowledge, training and experience, has successfully demonstrated the ability to solve problems relating to the subject matter and work.

© Banner Engineering Corp. All rights reserved.

WARNING:

- **Properly install arc or transient suppressors**
- Failure to follow these instructions could result in serious injury or death.
- Install any suppressors as shown across the coils of the machine primary control elements. Do not install suppressors directly across the output contacts of the safety or interface module. In such a configuration, it is possible for suppressors to fail as a short circuit.

Wiring for Models EZAC-R9-QE8 and EZAC-R11-QE8

- Model EZAC-R9-QE8: Three N.O. relay contacts
- Model EZAC-R11-QE8: Two N.O. and one N.C. relay contact
- Selectable 1-channel or 2-channel EDM, or no EDM
- Hard-wired I/O, power and ground
- 8-pin QD sensor connection

EDM Monitoring Configuration — Models EZAC-R9-QE8 and EZAC-R11-QE8 can monitor external normally closed, forced-guided monitoring contacts. The factory default setting is “2-channel monitoring.” Jumpers are supplied to configure 1-channel EDM or No EDM.

	Selector Switch	Terminals X1–X2	Terminals X3–X4	EZ-SCREEN Receiver
No Monitoring	2-Ch.	Jumper	Jumper	E2 (default)
1-Channel Monitoring	1-Ch.	External N.C. Contacts	Jumper	E1
2-Channel Monitoring (default)	2-Ch.	MPCE1 External N.C. Contact	MPCE2 External N.C. Contact	E2 (default)

© Banner Engineering Corp. All rights reserved.

Wiring—model EZAC-R9-QE8

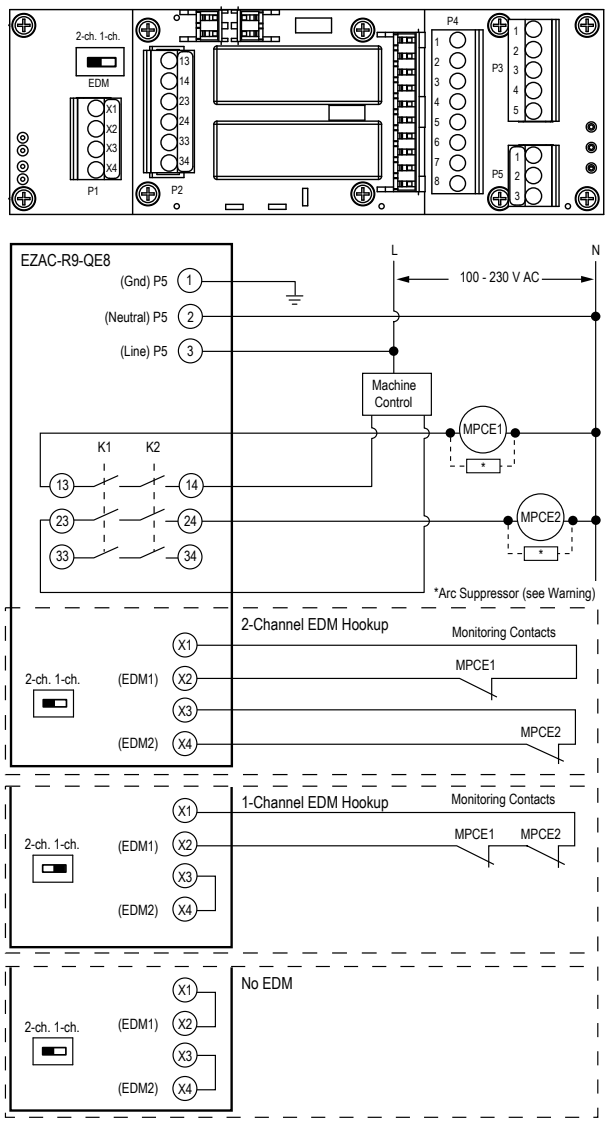

Wiring—model EZAC-R11-QE8

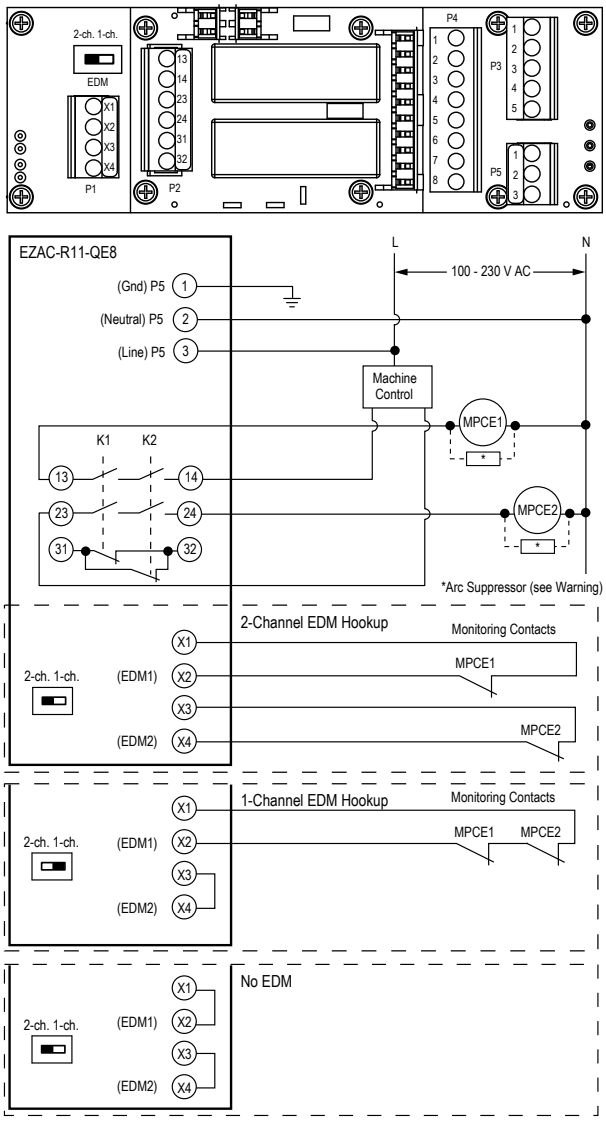

Wiring for Model EZAC-R15A-QE8-QS83

- One N.O. and one SPDT (Form C) relay contact
- 1-Channel EDM (EZ-SCREEN must be configured for E1)
- QD: 8-pin 7/8 in-16UNF for I/O, and a 3-pin 7/8 in-16UNF for power and ground

EDM Monitoring Configuration— Model EZAC-R15A-QE8-QS83 is factory-set for 1-channel monitoring of external normally closed, forced-guided monitoring contacts.

© Banner Engineering Corp. All rights reserved.

Wiring—model EZAC-R15A-QE8-QS83

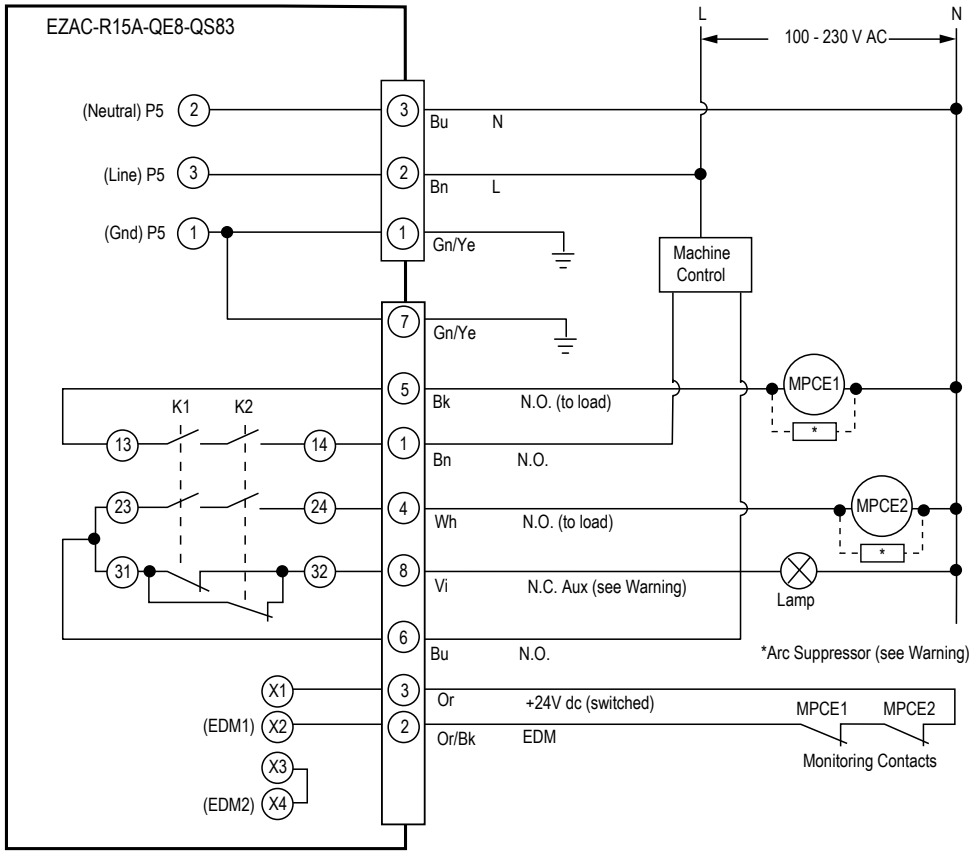

3-pin 7/8 in-16UNF power connector male face view (mating cordset: QDS-3..C)

Pinout	Pin	Color	Function
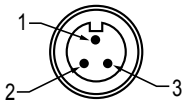	1	Green/yellow	Gnd/PE
	2	Brown	Line
	3	Blue	Neutral

8-pin 7/8 in-16UNF output connector male face view (mating cable: QDS-8..C)

Pinout	Pin	Color	Function
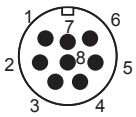	1	Brown	N.O.
	2	Orange/black	+24 V DC (EDM)
	3	Orange	EDM
	4	White	N.O. (to load)
	5	Black	N.O. (to load)
	6	Blue	Common
	7	Green/yellow	Gnd/PE
	8	Violet	N.C. Aux.

Wiring for Model EZAC-R8N-QE8-QS53

- One N.O. and one N.C. relay contact
- Power monitoring (EZ-SCREEN must be configured for E2)

© Banner Engineering Corp. All rights reserved.

- QD: 5-pin 7/8 in-16UNF for I/O and a 3-pin 7/8 in-16UNF for power and ground

Wiring—model EZAC-R8N-QE8-QS53

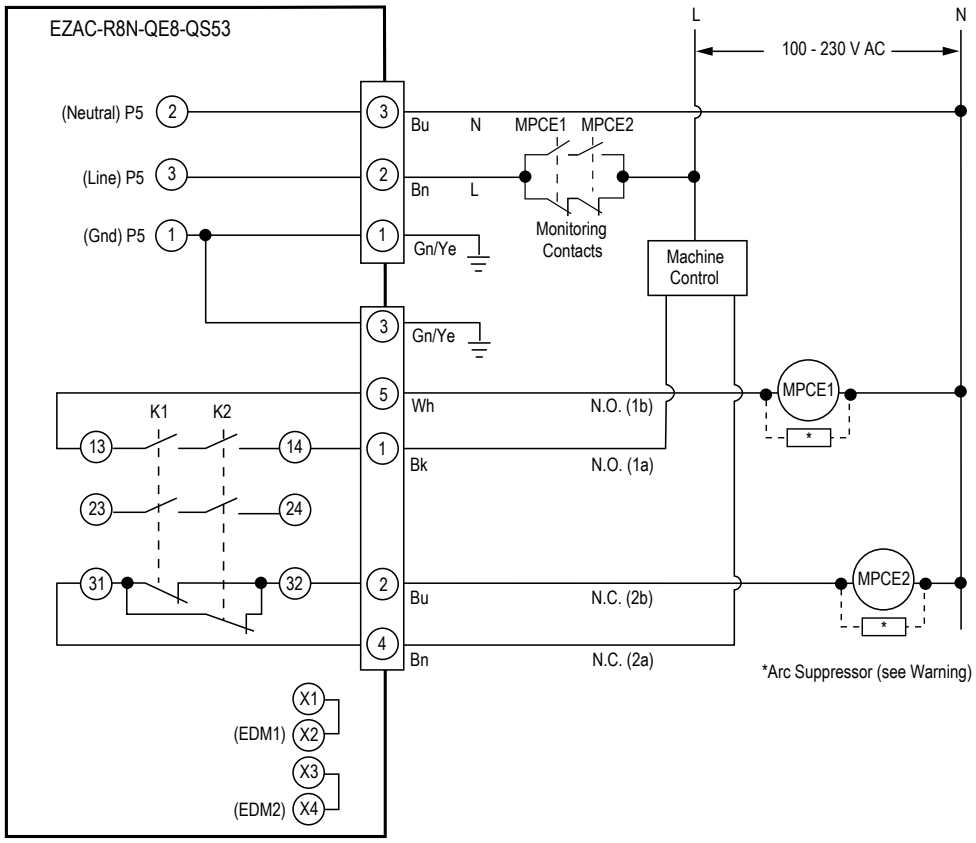

3-pin 7/8 in-16UNF power connector male face view (mating cordset: QDS-3..C)

Pinout	Pin	Color	Function
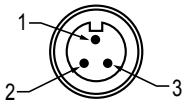	1	Green/yellow	Gnd/PE
	2	Brown	Line
	3	Blue	Neutral

5-pin 7/8 in-16UNF output connector male face view (mating cable: QDS-5..C)

Pinout	Pin	Color	Function
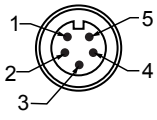	1	Black	N.O. (1a)
	2	Blue	N.C. (2a)
	3	Green/yellow	Gnd/PE
	4	Brown	N.C. (2b)
	5	White	N.O. (1b)

Wiring for Model EZAC-R10N-QE8-QS53

- Two N.O. relay contacts
- Power monitoring (EZ-SCREEN must be configured for E2)
- QD: 5-pin 7/8 in-16UNF for I/O, and a 3-pin 7/8 in-16UNF for power and ground

© Banner Engineering Corp. All rights reserved.

Wiring—model EZAC-R10N-QE8-QS53

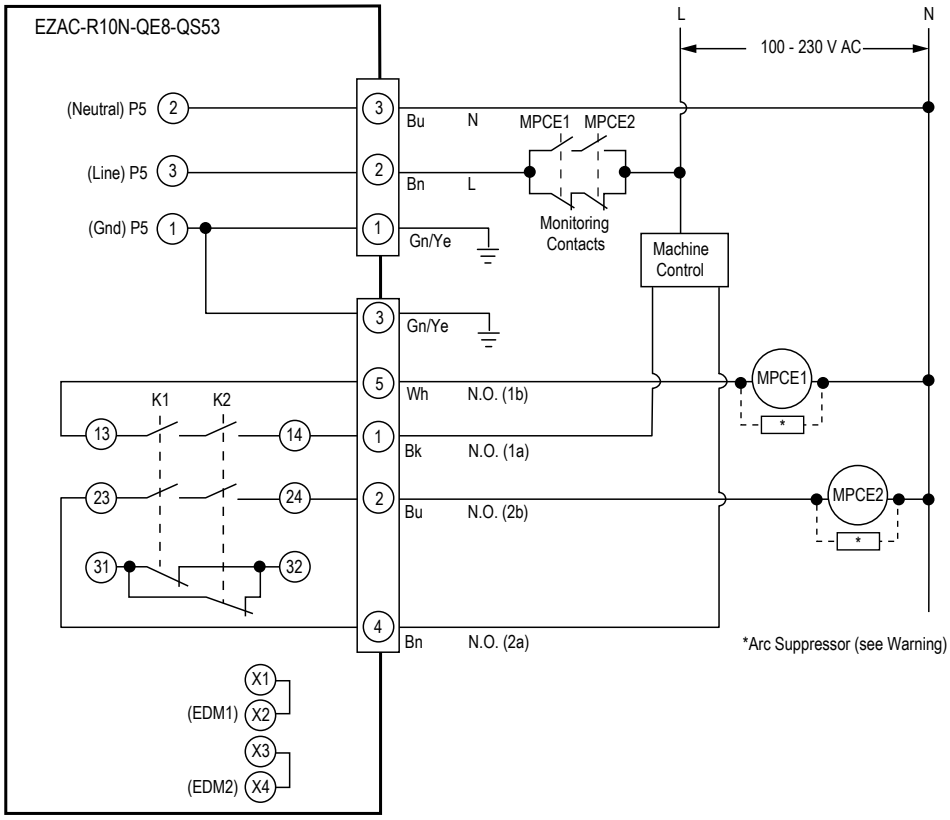

3-pin 7/8 in-16UNF power connector male face view (mating cable: QDS-3..C)

Pinout	Pin	Color	Function
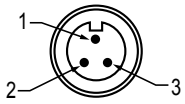	1	Green/yellow	Gnd/PE
	2	Brown	Line
	3	Blue	Neutral

5-pin 7/8 in-16UNF output connector male face view (mating cable: QDS-5..C)

Pinout	Pin	Color	Function
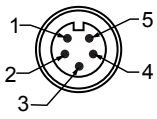	1	Black	N.O. (1a)
	2	Blue	N.C. (2a)
	3	Green/yellow	Gnd/PE
	4	Brown	N.C. (2b)
	5	White	N.O. (1b)

Wiring for Models EZAC-E-QE8 and EZAC-E-QE8-QS3

EZAC-E-QE8 is obsolete and no longer available for purchase. This information is shown to support existing installations.

- Power source for emitters only
- No Test input available
- 8-pin M12 connection to emitter, plus
  - Model EZAC-E-QE8: hard-wired power and ground inputs
  - Model EZAC-E-QE8-QS3: 3-pin 7/8 in-16UNF connector for power and ground inputs

© Banner Engineering Corp. All rights reserved.

Wiring—models EZAC-E-QE8 (Hard-wired)

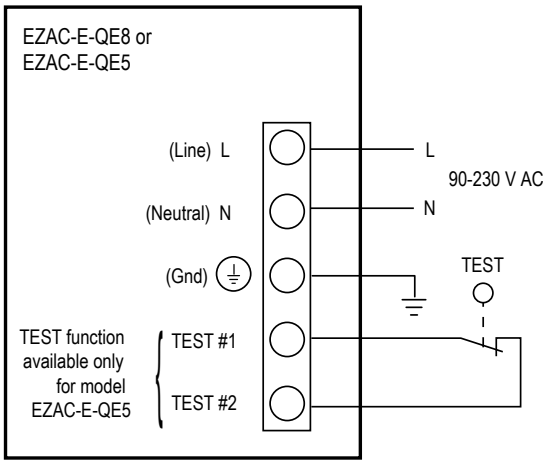

Terminal strip on box inside cover

Wiring—model EZAC-E-QE8-QS3 (3-pin Mini-style QD)

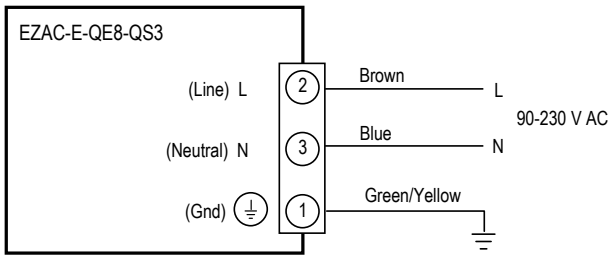

3-pin 7/8 in-16UNF power connector male face view (mating cable: QDS-3..C)

3-pin Pinout	Pin	Color	Function
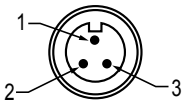	1	Green/Yellow	Gnd/PE
	2	Brown	Line
	3	Blue	Neutral

Wiring for Models EZAC-E-QE5 and EZAC-E-QE5-QS5

Both of these models are obsolete and no longer available for purchase. This information is shown to support existing installations.

- Power source for emitters only
- Test input available
- 5-pin M12 connection to emitter, plus
  - Model EZAC-E-QE5: hard-wired power, ground and test inputs
  - Model EZAC-E-QE5-QS5: 5-pin 7/8 in-16UNF connector for power, ground inputs, and test inputs

Wiring—models EZAC-E-QE5 (Hard-wired)

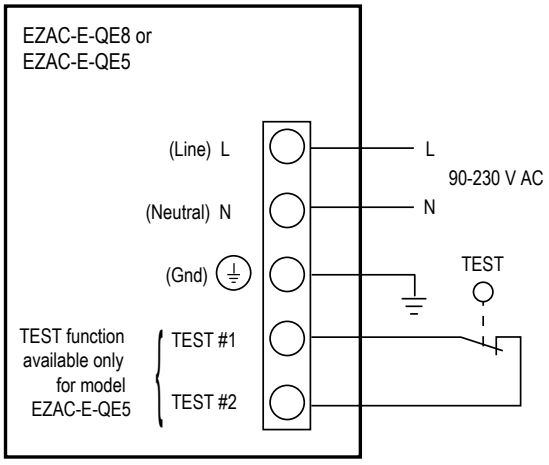

Terminal strip on box inside cover

Wiring—EZAC-E-QES-QS5 (5-pin 7/8 in-16UNF QD)

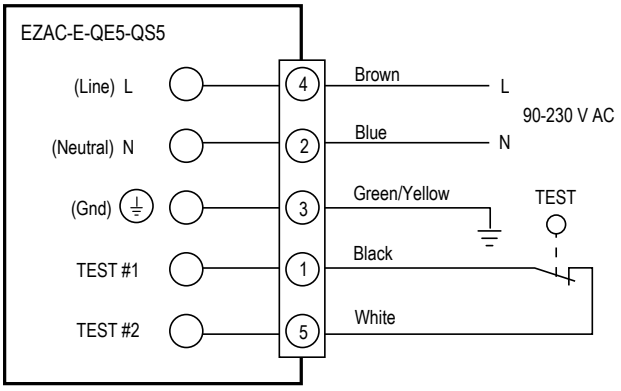

© Banner Engineering Corp. All rights reserved.

5-pin 7/8 in-16UNF Power Connector Male Face View (Mating Cable: QDS-5..C)

5-pin Male Pinout	Pin	Color	Function
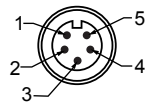	1	Black	TEST #1
	2	Blue	Neutral
	3	Green/Yellow	Gnd/PE
	4	Brown	Line
	5	White	TEST #2

© Banner Engineering Corp. All rights reserved.

Blank page

Chapter Contents

EZAC Initial Checkout Procedure 19
EZAC Periodic Checkout Procedure 20

Chapter 4 Checkout Procedures

Banner Engineering highly recommends performing the System checkouts as described. However, a qualified person (or team) should evaluate these generic recommendations considering their specific application and determine the appropriate frequency of checkouts. This will generally be determined by a risk assessment, such as the one contained in ANSI B11.0. The result of the risk assessment will drive the frequency and content of the periodic checkout procedures and must be followed.

CAUTION:

- **Disconnect power prior to checkout**
- Dangerous voltages might be present along the module wiring barriers whenever power to the machine control elements is on.
- Before performing the initial checkout procedure, disconnect all power from the machine to be controlled. Exercise extreme caution whenever machine control power is or might be present. Always disconnect power to the machine control elements before opening the enclosure housing of the module.

At installation or replacement and at machine set up, a Designated Person[(1)] must test each input device connected to the safety module for proper machine shutdown response. A Designated Person must check for proper operation, physical damage, mounting (looseness), and excessive environmental contamination. This must also take place on a periodic schedule determined by the user, based on the severity of the operating environment and the frequency of switching. Adjust, clean, repair, or replace components as needed when any parts or assemblies are damaged, broken, deformed, or badly worn; or if the electrical/mechanical specifications (for the environment and operating conditions) have been exceeded. **Always test the control system for proper functioning** under machine control conditions after performing maintenance, replacing the safety module, or replacing any component(s) of the safety circuit.

EZAC Initial Checkout Procedure

CAUTION:

- Disconnect Power Prior to Checkout
- Failure to follow these instructions could result in serious injury or death.
- Before performing the initial checkout, make certain all power is disconnected from the machine to be controlled. Dangerous voltages may be present along the box wiring barriers whenever power to the machine control elements is ON.
- Exercise extreme caution whenever machine control power is or may be present. Always disconnect power to the machine control elements before opening the box enclosure.

The EZ-SCREEN AC Interface box can be used safely only when its operation is controlled via an appropriate primary safeguarding device (such as the Banner EZ-SCREEN light screen) and connected to the interface according to the wiring diagrams.

1. Remove the power that controls (and is switched by) the machine primary control elements.
2. Verify that the AC Interface Box indicator LED is ON either Green or Red. Verify that the primary safety device controlled by the box is operating correctly, according to its product documentation and manufacturer's recommendations.
3. Confirm proper connection of the box to the controlled primary safety device according to the appropriate wiring diagram; see "EZAC Wiring Diagrams Introduction" on page 10.
4. Verify that all box output contacts follow exactly the operation of the safety output contacts of the controlled Primary Safety Device, when the primary safety device is operated according to its product documentation and manufacturer's recommendations.

(1) A Designated Person is identified in writing by the employer as being appropriately trained to perform a specified checkout procedure.

© Banner Engineering Corp. All rights reserved.

Refer to EZ-SCREEN or primary safeguarding device literature for full checkout procedures.

EZAC Periodic Checkout Procedure

Perform the Initial Checkout Procedure according to the intervals specified by the product documentation of the primary safety device controlling the interface module integrated within the EZAC box.

© Banner Engineering Corp. All rights reserved.

Chapter Contents

EZAC Dimensions 22

Chapter 5 EZAC Specifications

Input Voltage and Current

100–230 V AC ±15%

Input current: typical 0.37 A at 100 V AC in; 0.23 A at 200 V AC in

Inrush current: typical 15 A at 100 V AC in (5 ms maximum); 30 A at 200 V AC in (5 ms maximum)

Output Voltage and Current

24 V DC at 0.7 A (16.8 W)

SELV; capable of buffering 20 ms power interruptions

Input Channels

24 V DC ± 15%; 40 mA per channel (pin 4 and pin 5 in "EZAC Configuration" on page 5)

Supply Protection Circuitry

Protected against transient voltages

Output Response Time

10 ms (maximum)

Output High Current Rating (Models EZAC-R.. only)

If higher loads must be switched through one or more of the contacts, the minimum and maximum values of the contact(s) changes to:

Minimum:

- Voltage: 15 V AC/DC
- Current: 250 mA
- Power: 5 W (5 VA)

Maximum:

- Voltage: 250 V AC/DC
- Current: 8 A
- Power: 200 W (2000 VA)

Output Life (Models EZAC-R.. only)

Mechanical life: 50,000,000 operations

Electrical life: 100,000 operations (typical at 200 W [2000 VA] switched power, resistive load)

Status Indicators

Models EZAC-R.. : One bicolor (red/green) LED indicator on box cover indicates the power and output status of internal relays K1 and K2

Models EZAC-E.. : One green LED indicator on box cover indicates the power status (on when power is on).

Construction

Welded steel box with yellow polyester powder paint finish

Mounting

Box provides flanges for screw mounting; can be mounted directly to EZ-SCREEN receiver or emitter housing.

Output Configuration (Models EZAC-R.. only)

Each normally open output channel is a series connection of contacts from two forced-guided (positive-guided) relays, K1-K2. The normally closed contact is a parallel connection of contacts from K1-K2.

Contacts: AgNi, 5 µm gold-plated

Low Current Rating: **Caution:** The 5 µm gold-plated contacts allow the switching of low current/low voltage. In these low-power applications, multiple contacts can also be switched in series (that is, “dry switching”)
To preserve the gold plating on the contacts, the following maximum values should not be exceeded at any time:

Minimum:

- Voltage: 1 V AC/DC
- Current: 5 mA
- Power: 5 mW (5 mVA)

Maximum:

- Voltage: 60 V AC/DC
- Current: 300 mA
- Power: 7 W (7 VA)

Feedback Contact Rating (Y1-Y2, Y3-Y4):
Minimum:

- Voltage: 1 V AC/DC
- Current: 5 mA
- Power: 5 mW (5 mVA)

Maximum:

- Voltage: 60 V AC/DC
- Current: 300 mA
- Power: 7 W (7 VA)

NOTE: Transient suppression is recommended when switching inductive loads. Install suppressors across load. Never install suppressors across output contacts.

Environmental Rating

IP65

Vibration Resistance

10 to 50 Hz at 0.35 mm displacement per IEC 68-2-6

Operating Conditions

0 °C to +50 °C (+32 °F to +122 °F)

90% at +50 °C maximum relative humidity (non-condensing)

Application Notes

The box offers a field-replaceable relay module

Certifications

c UL us LISTED
E239562

© Banner Engineering Corp. All rights reserved.

EZAC Dimensions

Model EZAC-R.. EZ-SCREEN AC Interface Box

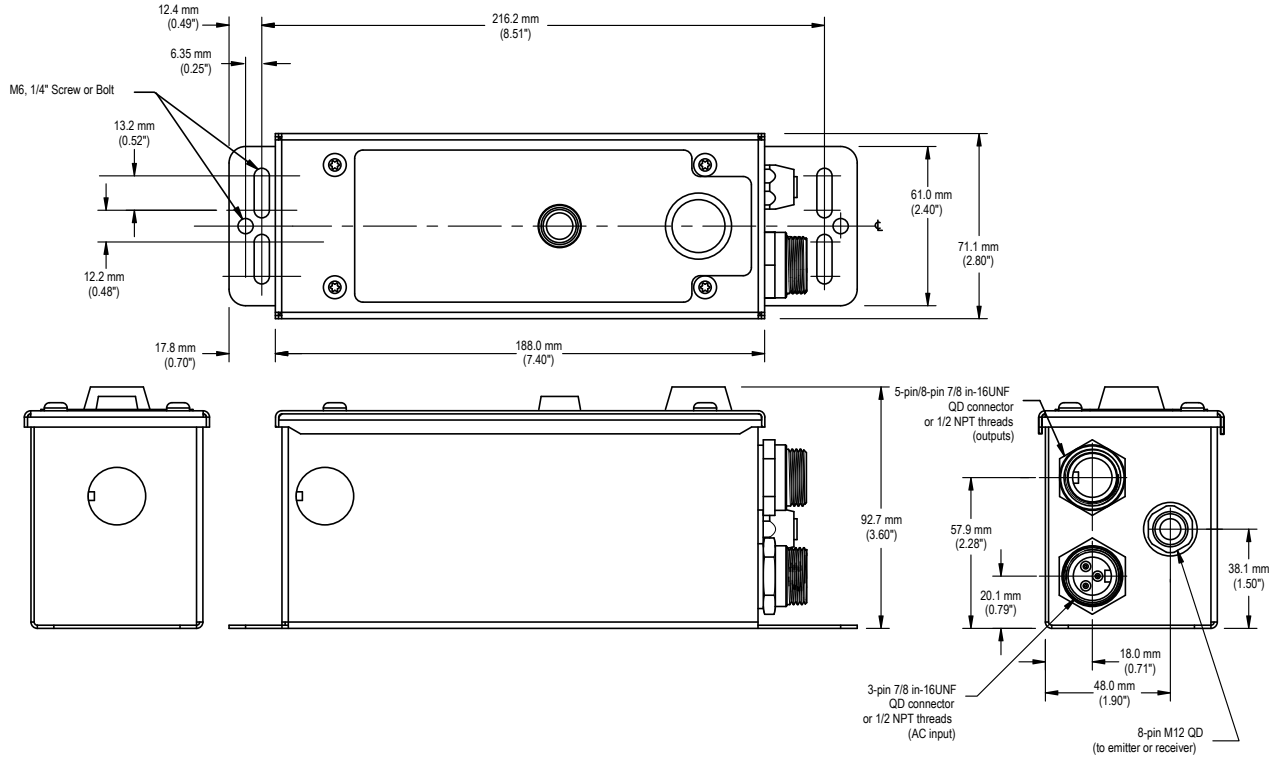

Model EZAC-E.. EZ-SCREEN AC Interface Box

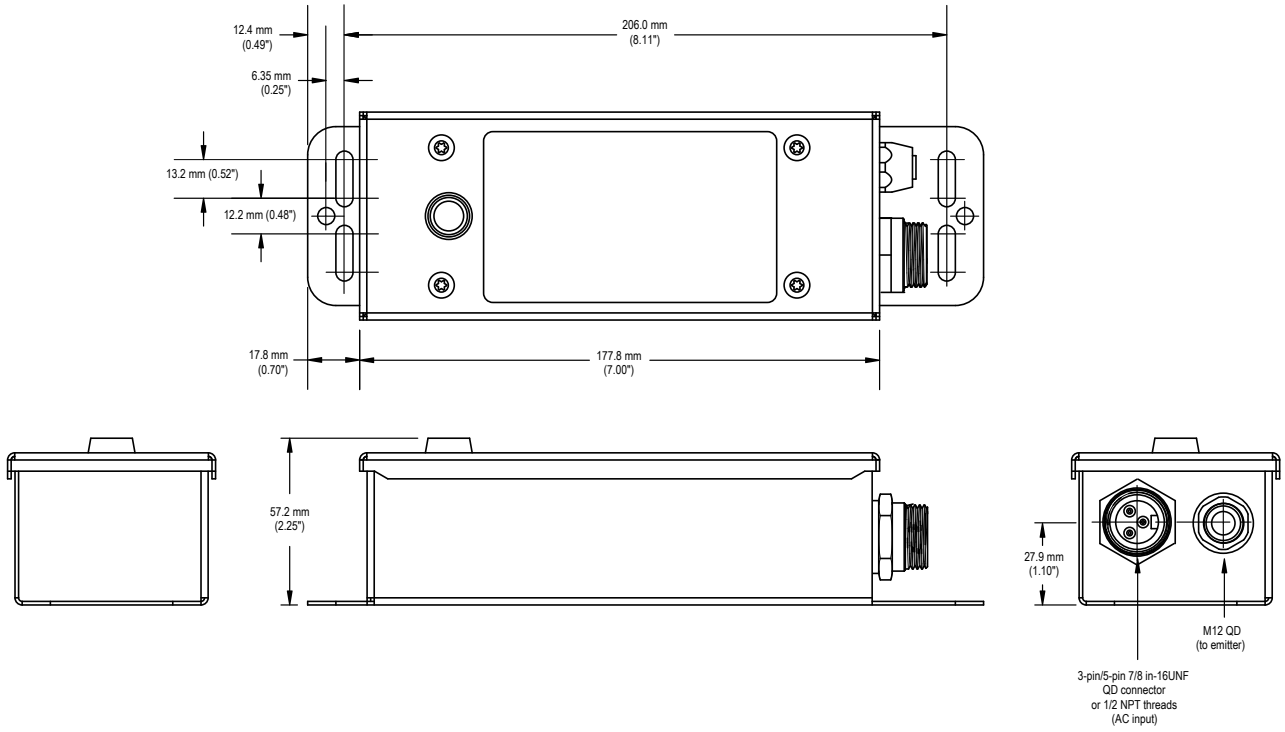

© Banner Engineering Corp. All rights reserved.

Chapter Contents

EZ-SCREEN Safety Light Screen Receiver and Emitter Cordsets 23
Splitter Cables (for Q8 emitters and receivers) 23
Double-Ended Cables (for Q8 emitters and receivers) 24
Single-Ended Cables (for separate SLSE..Q8 emitter connection) 24
Double-Ended Cables (for SLSE..Q5 emitter with TEST connection) 25
Single-Ended Cables (for SLSE..Q5 emitter connection) 25
EZAC Power and Input/Output Cordsets 25
Power Cordsets 25
Input/Output Cordsets 26

Chapter 6 Accessories

EZ-SCREEN Safety Light Screen Receiver and Emitter Cordsets

Splitter Cables (for Q8 emitters and receivers)

8-Pin Threaded M12 Splitter Cordsets—Flat Junction			
Model	**Trunk (Male)**	**Branches (Female)**	**Pinout**
CSB-M1280M1280	No trunk	No branches	Male 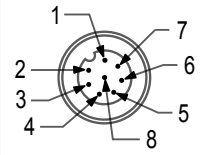 Female 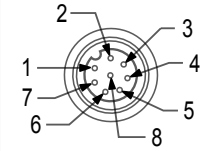 1 = Brown 2 = Or/Bk 3 = Orange 4 = White 5 = Black 6 = Blue 7 = Gn/Ye 8 = Violet
CSB-M1281M1281	0.3 m (1 ft)	2 x 0.3 m (1 ft)	
CSB-M1288M1281	2.44 m (8 ft)		
CSB-M12815M1281	4.57 m (15 ft)		
CSB-M12825M1281	7.62 m (25 ft)		
CSB-UNT825M1281	7.62 m (25 ft) Unterminated		
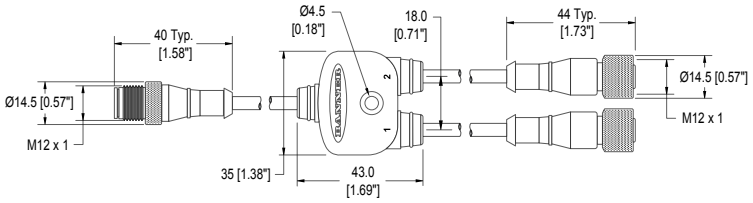			

© Banner Engineering Corp. All rights reserved.

Double-Ended Cables (for Q8 emitters and receivers)

8-Pin Threaded M12 Cordsets—Double Ended						
Model			Length	Style	Dimensions	DEE8-..D Pinout
8-pin/8-pin	8-pin/4-pin[1]	8-pin/5-pin[2]				
DEE2R-81D	**DEE8-41D**	**DEE8-51D**	0.3 m (1 ft)	Female Straight/ Male Straight	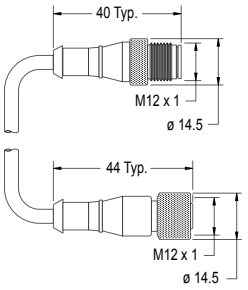	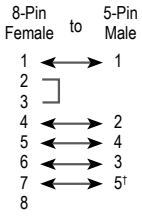
DEE2R-83D	-	-	0.91 m (3 ft)			
DEE2R-88D			2.44 m (8 ft)			
DEE2R-815D			4.57 m (15 ft)			
DEE2R-825D			7.62 m (25 ft)			
DEE2R-850D	-	-	15.24 m (50 ft)			
DEE2R-875D	-	-	22.86 m (75 ft)			
DEE2R-8100D	-	-	30.48 m (100 ft)			

Single-Ended Cables (for separate SLSE..Q8 emitter connection)

8-Pin Threaded M12 Cordsets—Single Ended					
Model	Length	Style	Dimensions	Pinout (Female)	
QDE-815D	4.57 m (15 ft)	Straight	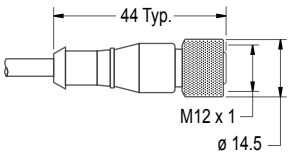	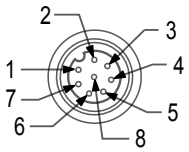	
QDE-825D	7.62 m (25 ft)				
QDE-850D	15.24 m (50 ft)				
QDE-875D	22.86 m (75 ft)				
QDE-8100D	30.48 m (100 ft)			1 = Brown 2 = Or/Bk 3 = Orange 4 = White	5 = Black 6 = Blue 7 = Gn/Ye 8 = Violet

[1] Use for a connection to safety BUS gateway/node, a “smart” self-monitored safety module, safety controller or safety PLC. DEE8-4..D do not have the pin 5 GND/chassis connection. GND/chassis connection should be made via the mounting hardware.

[2] Use for a connection to safety BUS gateway/node, a “smart” self-monitored safety module, safety controller or safety PLC.

© Banner Engineering Corp. All rights reserved.

Double-Ended Cables (for SLSE..Q5 emitter with TEST connection)

5-Pin Threaded M12 Cordsets—Double Ended					
Model	**Length**	**Style**	**Dimensions**	**Pinout (Male)**	**Pinout (Female)**
DEE2R-51D	0.3 m (1 ft)	Female Straight/Male Straight	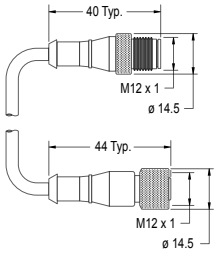	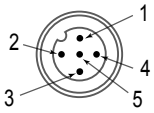	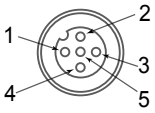
DEE2R-53D	0.91 m (3 ft)				
DEE2R-58D	2.44 m (8 ft)				
DEE2R-515D	4.57 m (15 ft)				
DEE2R-525D	7.62 m (25 ft)				
DEE2R-550D	15.2 m (50 ft)			1 = Brown 2 = White 3 = Blue	4 = Black 5 = Green/Yellow
DEE2R-575D	22.9 m (75 ft)				
DEE2R-5100D	30.5 m (100 ft)				

Single-Ended Cables (for SLSE..Q5 emitter connection)

5-Pin Threaded M12 Cordsets with Green/Yellow Ground Wire—Single Ended				
Model	**Length**	**Style**	**Dimensions**	**Pinout (Female)**
QDE-515D	4.57 m (15 ft)	Straight	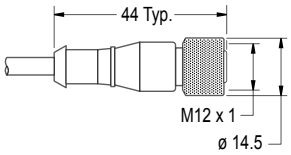	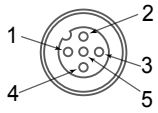 1 = Brown 2 = White 3 = Blue 4 = Black 5 = Green/Yellow
QDE-525D	7.62 m (25 ft)			
QDE-550D	15.2 m (49.9 ft)			
QDE-575D	22.9 m (75 ft)			
QDE-5100D	30.5 m (100 ft)			

EZAC Power and Input/Output Cordsets

Power Cordsets

3-pin 7/8-in Cordsets—Single Ended				
Model	**Length**	**Style**	**Dimensions**	**Pinout (Female)**
QDS-315C	4.75 m (15.58 ft)	Straight	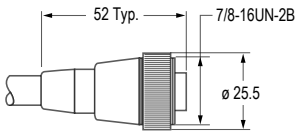	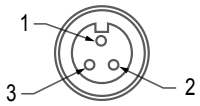 1 = Green/Yellow 2 = Brown 3 = Blue
QDS-325C	7.62 m (25.00 ft)			
QDS-350C	15.2 m (49.87 ft)			
QDS-375C	22.9 m (75.13 ft)			
QDS-3100C	30.5 m (100.06 ft)			

© Banner Engineering Corp. All rights reserved.

Input/Output Cordsets

5-Pin 7/8-in Cordsets with Green/Yellow Grounding Wire—Single Ended				
Model	**Length**	**Style**	**Dimensions**	**Pinout (Female)**
QDS-515C	4.75 m (15 ft)	Straight	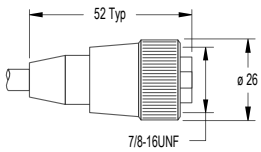	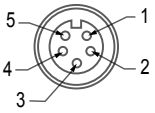 1 = Black 2 = Blue 3 = Green/Yellow 4 = Brown 5 = White
QDS-525C	7.62 m (25 ft)			
QDS-550C	15.2 m (50 ft)			

8-Pin 7/8-in Cordsets					
Model	**Length**	**Style**	**Dimensions**	**Pinout (Female)**	
QDS-815C	4.572 m (15 ft)	Straight	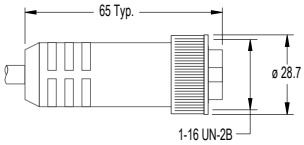		
QDS-825C	7.620 m (25 ft)				
QDS-850C	15.24 m (50 ft)				
QDS-875C	22.86 m (75 ft)			1 = Brown 2 = Or/Bk 3 = Orange 4 = White	5 = Black 6 = Blue 7 = Gn/Ye 8 = Violet

© Banner Engineering Corp. All rights reserved.

Chapter Contents

Repairs 27
EZAC Replacement Parts 27
Banner Engineering Corp Limited Warranty 28

Chapter 7 Product Support and Maintenance

Repairs

Do not attempt any repairs to this Banner device, other than replacing the component(s) listed in this document with original Banner replacement components.

See "EZAC Replacement Parts" on page 27 for a list of replaceable components.

Other than these components, this Banner device contains no field-replaceable components. For other problems, contact Banner Engineering for troubleshooting of this device. If the device is determined to be defective by a Banner Applications Engineer, they will advise you of Banner's RMA (Return Merchandise Authorization) procedure.

IMPORTANT: If instructed to return the device, pack it with care. Damage that occurs in return shipping is not covered by warranty.

WARNING:

- **Do not abuse the module after failure**—If an internal fault has occurred and the module will not reset, do not tap, strike, or otherwise attempt to correct the fault with a physical impact to the housing.
- Failure to follow these instructions could result in serious injury or death.
- An internal relay might have failed in such a manner that its replacement is required. If the module is not immediately replaced or repaired, multiple simultaneous failures might accumulate such that the safety function cannot be guaranteed.

EZAC Replacement Parts

Replacement relay modules are dependent on the AC Interface Box model.

EZAC Box Model Number	Replacement Output Relay Contact Module Model
EZAC-R9-QE8	EZAC-RM-1
EZAC-R10N-QE8-QS53	
EZAC-R11-QE8	EZAC-RM-2
EZAC-R15A-QE8-QS83	
EZAC-R8N-QE8-QS53	

Model	Description
MGA-K-1	Replacement key for key switch
EZAC-RM-1	Replacement relay board (3 normally open contacts)
EZAC-RM-2	Replacement relay board (2 normally open / 1 normally closed contact)

© Banner Engineering Corp. All rights reserved.

Banner Engineering Corp Limited Warranty

Banner Engineering Corp. warrants its products to be free from defects in material and workmanship for one year following the date of shipment. Banner Engineering Corp. will repair or replace, free of charge, any product of its manufacture which, at the time it is returned to the factory, is found to have been defective during the warranty period. This warranty does not cover damage or liability for misuse, abuse, or the improper application or installation of the Banner product.

THIS LIMITED WARRANTY IS EXCLUSIVE AND IN LIEU OF ALL OTHER WARRANTIES WHETHER EXPRESS OR IMPLIED (INCLUDING, WITHOUT LIMITATION, ANY WARRANTY OF MERCHANTABILITY OR FITNESS FOR A PARTICULAR PURPOSE), AND WHETHER ARISING UNDER COURSE OF PERFORMANCE, COURSE OF DEALING OR TRADE USAGE.

This Warranty is exclusive and limited to repair or, at the discretion of Banner Engineering Corp., replacement. **IN NO EVENT SHALL BANNER ENGINEERING CORP. BE LIABLE TO BUYER OR ANY OTHER PERSON OR ENTITY FOR ANY EXTRA COSTS, EXPENSES, LOSSES, LOSS OF PROFITS, OR ANY INCIDENTAL, CONSEQUENTIAL OR SPECIAL DAMAGES RESULTING FROM ANY PRODUCT DEFECT OR FROM THE USE OR INABILITY TO USE THE PRODUCT, WHETHER ARISING IN CONTRACT OR WARRANTY, STATUTE, TORT, STRICT LIABILITY, NEGLIGENCE, OR OTHERWISE.**

Banner Engineering Corp. reserves the right to change, modify or improve the design of the product without assuming any obligations or liabilities relating to any product previously manufactured by Banner Engineering Corp. Any misuse, abuse, or improper application or installation of this product or use of the product for personal protection applications when the product is identified as not intended for such purposes will void the product warranty. Any modifications to this product without prior express approval by Banner Engineering Corp will void the product warranties. All specifications published in this document are subject to change; Banner reserves the right to modify product specifications or update documentation at any time. Specifications and product information in English supersede that which is provided in any other language. For the most recent version of any documentation, refer to: www.bannerengineering.com.

For patent information, see www.bannerengineering.com/patents.

© Banner Engineering Corp. All rights reserved.

LinkedIn

Twitter

Facebook



© 2024. All rights reserved.
www.bannerengineering.com