SX5 Bracket Datasheet

SXA-MBK Bracket Models

Mount the laser scanner directly to a surface or use one of the brackets to mount (or protect) the laser scanner.

Model	Ref	Bracket Components	Qty
SXA-MBK-1 Pitch and Roll Adjustment Bracket	1	Pitch adjusting bracket, 4 mm (6 gauge) cold-rolled steel with a clear zinc chromate finish	1
	8	Roll adjusting bracket, 4 mm (6 gauge) cold-rolled steel with a clear zinc chromate finish	1
	6	Support bracket, 4 mm (6 gauge) cold-rolled steel with a clear zinc chromate finish; four M5x10 UNI 5933 SS screws	1
	9	M5 mounting SS screws	2
	7	M4x8 UNI 5931 SS screw, D4 UNI 6592 SS flat washer, and A4 UNI 1751 SS spring washer	2 each
	5	M5x12 UNI 5933 SS screw and M5 SS washer	2 each
	4	M5x12 UNI 5933 SS screw	2
	3	Memory bracket, 3 mm (8 gauge) cold-rolled steel with a clear zinc chromate finish	1
	2	M4x8 UNI 5931 SS screw, D4 UNI 6592 SS flat washer, and A4 UNI 1751 SS spring washer	1 each

Model	Ref	Bracket Components	Qty
SXA-MBK-1 Pitch Angle Adjustment Bracket (created by removing roll pieces)	1	Pitch adjusting bracket, 4 mm (6 gauge) cold-rolled steel with a clear zinc chromate finish	1
	9	M5 mounting SS screws	2
	5	M5x12 UNI 5933 SS screw and M5 SS washer	2 each
	4	M5x12 UNI 5933 SS screw	2
	3	Memory Bracket, 3 mm (8 gauge) cold-rolled steel with a clear zinc chromate finish	1
	2	M4x8 UNI 5931 SS screw, D4 UNI 6592 SS flat washer, and A4 UNI 1751 SS spring washer	1 each
SXA-MBK-2 Protection Bracket	1	Head protection bracket, 4 mm (6 gauge) cold-rolled steel with a clear zinc chromate finish	1
	2	M5x10 UNI 5933 SS screw	2

Customer-supplied equipment: 3 mm Allen Wrench

Mounting the Protection Bracket

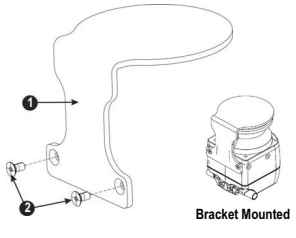

Figure 1: Mounting the SXA-MBK-2 protection bracket to the scanner

The **SXA-MBK-2** protection bracket is an optional accessory that provides protection to the scanner if it is located in an environment where the scanner may be hit by falling objects or subject to collision.

Fasten the protection bracket (1) on the back of the scanner using two M5 screws (2) (maximum of 3 N·m torque). Mount the **SXA-MBK-2** bracket onto the scanner before installing the other mounting accessories.

IMPORTANT: *This protection bracket consumes the mounting holes on the back of the unit. Use other holes to mount the scanner to the machine.*

The bracket is made from 4 mm (6 gauge) cold-rolled steel with a clear zinc chromate finish.

Mounting the Angle Adjustment Brackets

Provide two M5 holes with 73 mm spacing on the intended wall or mounting surface. The M5 UNI 5933 screws used for mounting the brackets to a wall are not supplied in the bracket mounting kits; they must be supplied by the user.

Pitch and roll angle adjustment bracket (SXA-MBK-1)—The bracket system is partially assembled.

1) Remove the M4 roll adjustment screws and washers (7), then align the M5 wall mounting screws (9).
2) Mount the roll adjustment bracket (8) to the wall or panel by inserting two M5 UNI 5933 screws (9). Tighten them, alternating between the two, until they are tight (torque to 2.5 to 3 N·m).
3) Place the assembly of (1) and (6) back onto the roll adjustment bracket (8) (or turn back into place) and re-install the M4 roll adjustment screws and washers (7). Do not tighten the M4 roll adjustment screws for the roll angle.

ПРОМЭЛЕКТРОНИКА/ sales@prom-elec.com

If only pitch adjustment is desired, the entire SXA-MBK-1 can be used with the roll adjustment centered (level) or the back plates (6 and 8) can be removed and only the pitch adjustment bracket (1) is used to mount the scanner. To remove 6 and 8 first remove the roll adjustment screws (7) to remove the back plate (8). Then remove the four screws that attach (6) to (1) from the back.

The pitch adjustment plate (1) can now be mounted to the 73 mm spaced holes using the M5 UNI 5933 screws (9). Tighten the screws, alternating between the two, until they are tight (2.5 to 3 N·m torque).

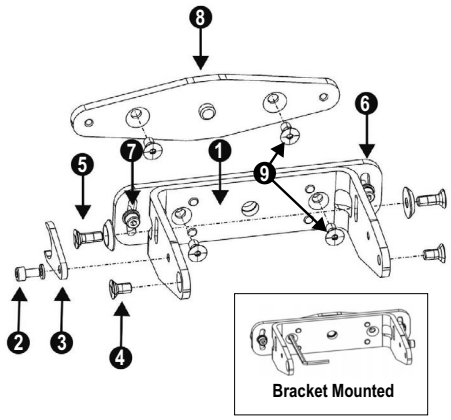

Figure 2: Pitch and roll angle adjustment bracket (SXA-MBK-1)

Mounting the Scanner and Adjusting the Angle

When mounting the brackets or scanner, do not exceed the listed torque or you will damage the scanner. The pitch angle adjustment procedure applies to both uses of the bracket assemblies.

The Positioning Memory Bracket (one piece) saves the inclination angle set for the installation. This allows for quick installation without further mechanical adjustments if it is ever necessary to replace the unit.

To mount the device with 90° vertical inclination:

1) Mount the Positioning Memory Bracket (3) with the M4 screw (and washer) (2) to the main bracket (1) but do not tighten it.
2) Align the Positioning Memory Bracket with the center of the main bracket slot, then tighten the M4 screw (do not exceed 1.5 to 2 N·m torque).
3) Mount the scanner to the main bracket using the M5 × 12 Pitch Adjustment Screws (with washers) (5) and the M5 × 12 Scanner Fastening Screws (4). Tighten all four screws (do not exceed 2.5 to 3 N·m torque).

To place a device with a specific pitch angle:

1) Screw without tightening the M5 Scanner Fastening Screws, the M5 Pitch Adjusting Screws, and the Positioning Memory Bracket with the M4 screw.
2) Rotate the device to the desired pitch angle within the allowed range (± 6°).
3) Tighten the M5 Scanner Fastening Screws and then the M5 Pitch Adjusting Screws (do not exceed 2.5 to 3 N·m torque).
4) Tighten the Positioning Memory Bracket M4 screw (do not exceed 1.5 to 2 N·m torque).

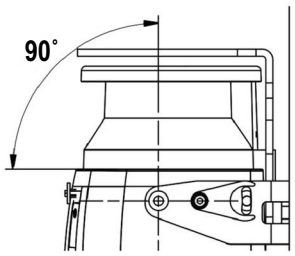

Figure 3: Adjust the scanner angle

Adjusting the Roll Angle

The roll angle adjustment procedure only applies when all parts of bracket SXA-MBK-1 are used.

Rotate the brackets to reach the desired roll angle within the allowed range (± 8.5°). Tighten the M4 Roll Adjusting Screws (7) (do not exceed 1.5 to 2 N·m torque).

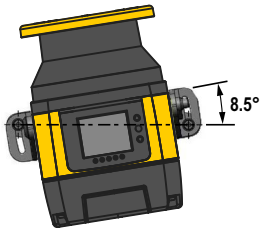

Figure 4: Adjust the roll angle

Document title: SX5 Bracket Datasheet
Part number: 209707
Revision: B
Original Instructions
© Banner Engineering Corp. All rights reserved.

209707