EZ-SCREEN SLS Safety Light Curtain Product Manual

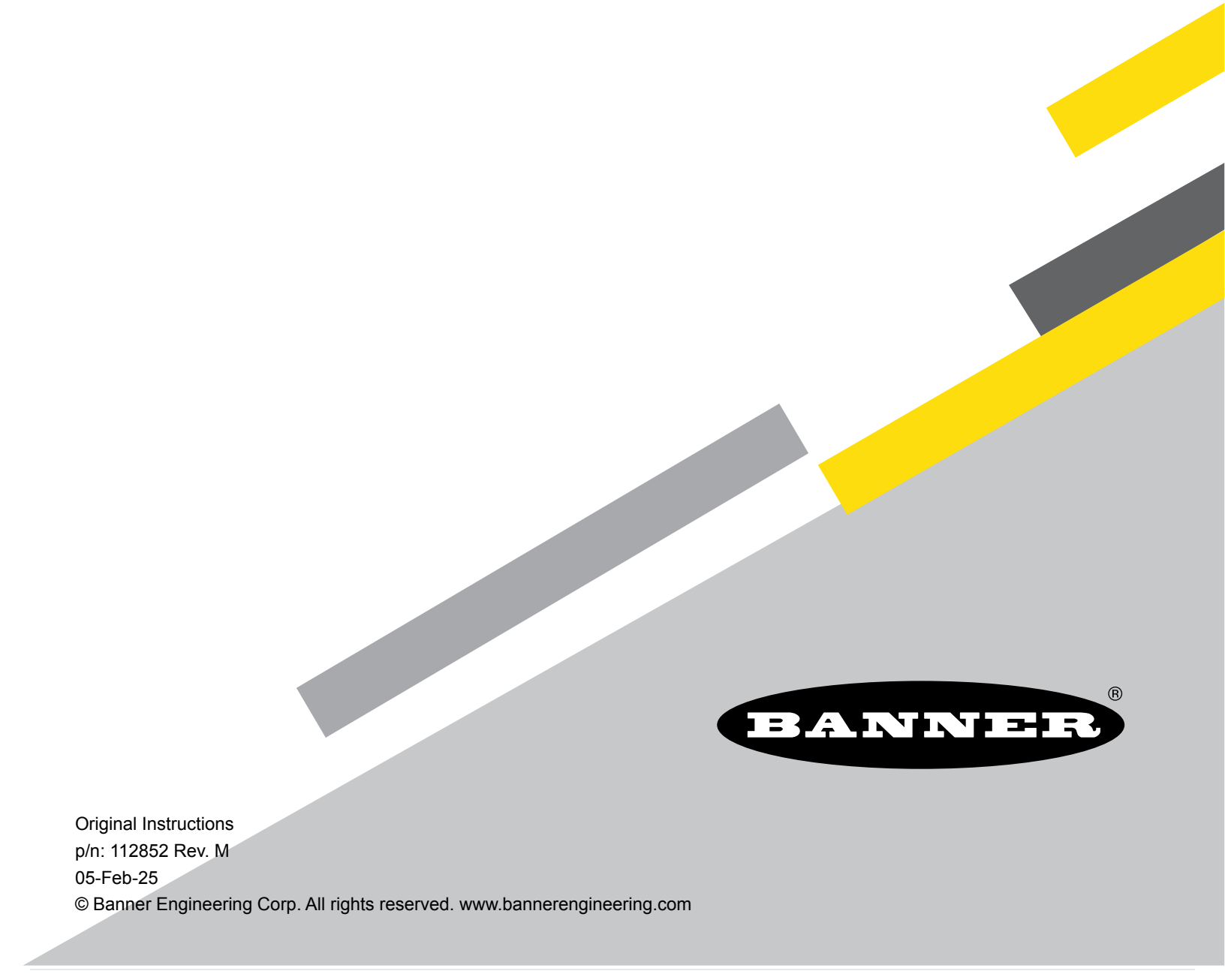

Original Instructions
p/n: 112852 Rev. M
05-Feb-25
© Banner Engineering Corp. All rights reserved. www.bannerengineering.com

ПРОМЭЛЕКТРОНИКА/ sales@prom-elec.com

Contents

Chapter 1 About This Document 5
1.1 Important... Read This Before Proceeding! 5
1.2 Use of Warnings and Cautions 5
1.3 EU/UK Declaration of Conformity (DoC) 6

Chapter 2 Standards and Regulations 7
2.1 Applicable US Standards 7
2.2 Applicable OSHA Regulations 8
2.3 International/European Standards 8

Chapter 3 Introduction 9
3.1 Features 9
3.2 Operating Features 9
3.3 System Description 10
3.4 Appropriate Applications and Limitations 11
3.4.1 Examples: Appropriate Applications 11
3.4.2 Examples: Inappropriate Applications 11
3.5 Control Reliability: Redundancy and Self-Checking 12
3.6 Specifications 12
3.6.1 General Specifications 12
3.6.2 Emitter Specifications 13
3.6.3 Receiver Specifications 13
3.6.4 Dimensions 14
3.6.5 End Cap Brackets 15
3.6.6 Center Bracket 15

Chapter 4 Components 16
4.1 System Components 16
4.2 Standard Emitter and Receiver Models (Non-Cascadeable) with 14 mm Resolution 17
4.3 Standard Emitter and Receiver Models (Non-Cascadeable) with 30 mm Resolution 17
4.4 Documentation 18

Chapter 5 Installation Instructions 19
5.1 Installation and Alignment 19
5.2 Mechanical Installation Considerations 19
5.2.1 Calculating the Safety Distance (Minimum Distance) 20
5.2.2 Reducing or Eliminating Pass-Through Hazards 22
5.2.3 Reset Switch Location 23
5.2.4 Supplemental Safeguarding 23
5.2.5 Emitter and Receiver Orientation 24
5.2.6 Adjacent Reflective Surfaces 25
5.2.7 Use of Corner Mirrors 27
5.2.8 Installation of Multiple Systems 28
5.3 Mounting the Emitter and Receiver 29
5.4 Sensor Mounting and Mechanical Alignment 30
5.5 Mounting the Reset Switch 31
5.6 Routing Cordsets 31
5.7 Initial Electrical Connections 32
5.7.1 Emitter Wiring Options 33
5.8 Initial Checkout Procedure 33
5.8.1 Configuring the System for Initial Checkout 33
5.8.2 Initial Power-Up 33
5.8.3 Optically Align the SLS Components 34
5.8.4 Optical Alignment Procedure with Mirrors 35
5.8.5 Reduced Resolution/Floating Blanking 36
5.8.6 Fixed Blanking 36
5.8.7 Perform a Trip Test 37
5.9 Electrical Connections to the Guarded Machine 39
5.9.1 Output Signal Switching Device (OSSD) Output Connections 39
5.9.2 Final Switching Devices (FSD) Interfacing Connections 40
5.9.3 Machine Primary Control Elements (MPCE) and External Device Monitoring (EDM) Input 41
5.10 Auxiliary (Aux.) Output 43
5.11 Remote Test Input 43
5.12 Preparing for System Operation 43
5.13 Sensor "Swapability" 43

© Banner Engineering Corp. All rights reserved. www.bannerengineering.com

5.14 Wiring Diagrams 44
5.14.1 Generic Wiring - Emitter 44
5.14.2 Generic Wiring - Receiver to Safety Controller 45
5.14.3 Generic Wiring - Receiver to Interface Modules 46
5.14.4 Generic Wiring - Receiver to FSD 48

Chapter 6 Operating Instructions 49
6.1 Security Protocol 49
6.2 System Configuration Settings 49
6.2.1 Access the Configuration Panel 50
6.2.2 Inverted Display 51
6.2.3 Selectable Trip/Latch Outputs 51
6.3 Reset Procedures 51
6.3.1 Manual Resets and Lockout Conditions 51
6.3.2 Resetting the Receiver 52
6.3.3 Resetting the Emitter 52
6.4 Status Indicators 52
6.4.1 Emitter Status Indicators 53
6.4.2 Receiver Status Indicators 53
6.4.3 Status Indicators for Cascaded Applications 54
6.5 Normal Operation 58
6.5.1 System Power-Up 58
6.5.2 Run Mode 59
6.6 Periodic Checkout Requirements 59

Chapter 7 Checkout Procedures 60
7.1 Schedule of Checkouts 60
7.2 Commissioning Checkout 60
7.3 Shift/Daily Checkout 62
7.4 Semi-Annual (Six-Month) Checkout 62

Chapter 8 Cascade 63
8.1 Overview of Cascading 63
8.2 System Components and Specifications 64
8.2.1 Cascadeable Emitter and Receiver Models with 14 mm Resolution 64
8.2.2 Cascadeable Emitter and Receiver Models with 30 mm Resolution 65
8.3 Receiver Display 65
8.4 Determining Interconnect Cable Lengths 66
8.5 Response Time for Cascaded Light Screens 68
8.5.1 Individual Response Time and Separation Distance 69
8.5.2 Overall Response Time and Safety (Minimum) Distance 70
8.5.3 Cascade Configuration vs. Response Time 70
8.6 Cascaded Sensor Configuration Settings 71
8.6.1 Configure for Cascaded Operation 72
8.7 Emergency Stop Buttons and Rope/Cable Pulls 73
8.7.1 E-Stop Switch Requirements (Positive-Opening) 74
8.8 Interlock Switches in Cascaded Systems 74
8.8.1 Interlock Guarding Requirements 75
8.8.2 Positive-Opening Interlocking Safety Switches 75
8.8.3 Monitoring Series-Connected Positive-Opening Safety Switches 76

Chapter 9 Troubleshooting 79
9.1 Troubleshooting and Lockout Conditions 79
9.2 Recovery Procedures 79
9.2.1 Emitter and Receiver Reset 79
9.2.2 Advanced Diagnostics 80
9.2.3 Receiver Error Codes 80
9.2.4 Emitter Error Codes 82
9.3 Test Mode for 5-Pin Emitters 82
9.4 Electrical and Optical Noise 83
9.4.1 Check for Sources of Electrical Noise 83
9.4.2 Check for Optical Noise Sources 83

Chapter 10 Accessories 84
10.1 Cordsets 84
10.1.1 Single-Ended (Machine Interface) Cordsets (One Cable for Each Emitter and Receiver) 84
10.1.2 Double-Ended (Sensor Interconnect) Cordsets 85
10.1.3 Splitter Cordsets 86

© Banner Engineering Corp. All rights reserved. www.bannerengineering.com

10.1.4 Bulkhead Connector 86
10.1.5 Cordsets for Connecting Contact Devices 87
10.1.6 DEE8-xxD Adapter M12 QD Cordsets 87
10.2 Interface Modules 87
10.3 Contactors 88
10.4 Safety Controllers 88
10.5 Muting Modules 88
10.6 AC Boxes 88
10.7 Remote Reset Switch 89
10.8 Lens Shields 89
10.9 Tubular Enclosures 89
10.10 MSA Series Stands 90
10.11 SSM Series Corner Mirrors 90
10.12 Mounting Brackets 91
10.13 Alignment Aids 93
10.14 EZ-LIGHT for EZ-SCREEN 93

Chapter 11 Product Support and Maintenance 94
11.1 Replacement Parts 94
11.2 Clean Components with Mild Detergent 94
11.3 Warranty Service 94
11.4 Manufacturing Date 95
11.5 Disposal 95
11.6 Contact Us 95
11.7 Banner Engineering Corp Limited Warranty 95

Index 96

Glossary 97

© Banner Engineering Corp. All rights reserved. www.bannerengineering.com

Chapter Contents

1.1 Important... Read This Before Proceeding! 5
1.2 Use of Warnings and Cautions 5
1.3 EU/UK Declaration of Conformity (DoC) 6

Chapter 1 About This Document

1.1 Important... Read This Before Proceeding!

It is the responsibility of the machine designer, controls engineer, machine builder, machine operator, and/or maintenance personnel or electrician to apply and maintain this device in full compliance with all applicable regulations and standards. The device can provide the required safeguarding function only if it is properly installed, properly operated, and properly maintained. This manual attempts to provide complete installation, operation, and maintenance instructions. *Reading the manual in its entirety is highly recommended to ensure proper understanding of the operation, installation, and maintenance.* Please direct any questions regarding the application or use of the device to Banner Engineering Corp..

For more information regarding U.S. and international institutions that provide safeguarding application and safeguarding device performance standards, see "Standards and Regulations" on page 7.

WARNING:

- The user is responsible for following these instructions.
- **Failure to follow any of these responsibilities may potentially create a dangerous condition that could result in serious injury or death.**
- Carefully read, understand, and comply with all instructions for this device.
- Perform a risk assessment that includes the specific machine guarding application. Guidance on a compliant methodology can be found in ISO 12100 or ANSI B11.0.
- Determine what safeguarding devices and methods are appropriate per the results of the risk assessment and implement per all applicable local, state, and national codes and regulations. See ISO 13849-1, ANSI B11.19, and/or other appropriate standards.
- Verify that the entire safeguarding system (including input devices, control systems, and output devices) is properly configured and installed, operational, and working as intended for the application.
- Periodically re-verify, as needed, that the entire safeguarding system is working as intended for the application.

1.2 Use of Warnings and Cautions

The precautions and statements used throughout this document are indicated by alert symbols and must be followed for the safe use of the EZ-SCREEN SLS Safety Light Curtain. Failure to follow all precautions and alerts may result in unsafe use or operation. The following signal words and alert symbols are defined as follows:

Signal Word and Symbol	Definition
WARNING:	**Warnings** refer to potentially hazardous situations which, if not avoided, could result in serious injury or death.
CAUTION:	**Cautions** refer to potentially hazardous situations which, if not avoided, could result in minor or moderate injury.

© Banner Engineering Corp. All rights reserved.
www.bannerengineering.com

These statements are intended to inform the machine designer and manufacturer, the end user, and maintenance personnel, how to avoid misapplication and effectively apply the EZ-SCREEN SLS Safety Light Curtain to meet the various safeguarding application requirements. These individuals are responsible to read and abide by these statements.

1.3 EU/UK Declaration of Conformity (DoC)

Banner Engineering Corp. herewith declares that these products are in conformity with the provisions of the listed directives and all essential health and safety requirements have been met. For the complete DoC, please go to www.bannerengineering.com.

Product	Directive
EZ-SCREEN SLS Safety Light Curtain	EU: Machine Safety Directive 2006/42/EC and EMC Directive 2014/30/EC
	UKCA: Machinery (Safety) Regulations 2008 and EMC Regulations 2016

Representative in EU: Spiros Lachandidis, Managing Director, **Banner Engineering BV** Park Lane | Culliganlaan 2F bus 3 | 1831 Diegem, BELGIUM

Representative in UK: Tony Coghlan, Managing Director, **Turck Banner LTD** Blenheim House | Blenheim Court | Wickford, Essex SS11 8YT | Great Britain

© Banner Engineering Corp. All rights reserved.
www.bannerengineering.com

Chapter Contents

2.1 Applicable US Standards 7
2.2 Applicable OSHA Regulations 8
2.3 International/European Standards 8

Chapter 2 Standards and Regulations

The list of standards below is included as a convenience for users of this Banner device. Inclusion of the standards below does not imply that the device complies specifically with any standard, other than those specified in the Specifications section of this manual.

2.1 Applicable US Standards

ANSI B11.0 Safety of Machinery

ANSI B11.1 Mechanical Power Presses

ANSI B11.2 Hydraulic Power Presses

ANSI B11.3 Power Press Brakes

ANSI B11.4 Shears

ANSI B11.5 Iron Workers

ANSI B11.6 Lathes

ANSI B11.7 Cold Headers and Cold Formers

ANSI B11.8 Drilling, Milling, and Boring

ANSI B11.9 Grinding Machines

ANSI B11.10 Metal Sawing Machines

ANSI B11.11 Gear Cutting Machines

ANSI B11.12 Roll Forming and Roll Bending Machines

ANSI B11.13 Single- and Multiple-Spindle Automatic Bar and Chucking Machines

ANSI B11.14 Coil Slitting Machines

ANSI B11.15 Pipe, Tube, and Shape Bending Machines

ANSI B11.16 Metal Powder Compacting Presses

ANSI B11.17 Horizontal Extrusion Presses

ANSI B11.18 Machinery and Machine Systems for the Processing of Coiled Strip, Sheet, and Plate

ANSI B11.19 Performance Requirements for Risk Reduction Measures: Safeguarding and Other Means of Reducing Risk

ANSI B11.20 Manufacturing Systems

ANSI B11.21 Machine Tools Using Lasers

ANSI B11.22 Numerically Controlled Turning Machines

ANSI B11.23 Machining Centers

ANSI B11.24 Transfer Machines

ANSI/RIA R15.06 Safety Requirements for Industrial Robots and Robot Systems

© Banner Engineering Corp. All rights reserved.

NFPA 79 Electrical Standard for Industrial Machinery

ANSI/PMMI B155.1 Package Machinery and Packaging-Related Converting Machinery — Safety Requirements

2.2 Applicable OSHA Regulations

OSHA Documents listed are part of: Code of Federal Regulations Title 29, Parts 1900 to 1910

OSHA 29 CFR 1910.212 General Requirements for (Guarding of) All Machines

OSHA 29 CFR 1910.147 The Control of Hazardous Energy (lockout/tagout)

OSHA 29 CFR 1910.217 (Guarding of) Mechanical Power Presses

2.3 International/European Standards

ISO 12100 Safety of Machinery – General Principles for Design – Risk Assessment and Risk Reduction

ISO 13857 Safety of Machinery – Safety Distances to Prevent Hazard Zones Being Reached

ISO 13850 (EN 418) Emergency Stop Devices, Functional Aspects – Principles for Design

ISO 13851 Two-Hand Control Devices – Principles for Design and Selection

IEC 62061 Safety of Machinery – Functional Safety of Safety-Related Control Systems

ISO 13849-1 Safety of Machinery – Safety-Related Parts of Control Systems – Part 1: General Principles for Design

EN 13855 (EN 999) The Positioning of Protective Equipment in Respect to Approach Speeds of Parts of the Human Body

ISO 14119 (EN 1088) Interlocking Devices Associated with Guards – Principles for Design and Selection

EN 60204-1 Electrical Equipment of Machines Part 1: General Requirements

IEC 61496 Electro-sensitive Protection Equipment

IEC 60529 Degrees of Protection Provided by Enclosures

IEC 60947-1 Low Voltage Switchgear – General Rules

IEC 60947-5-1 Low Voltage Switchgear – Electromechanical Control Circuit Devices

IEC 60947-5-5 Low Voltage Switchgear – Electrical Emergency Stop Device with Mechanical Latching Function

IEC 61508 Functional Safety of Electrical/Electronic/Programmable Electronic Safety-Related Systems

IEC 62046 Safety of Machinery – Applications of Protective Equipment to Detect the Presence of Persons

ISO 3691-4 Industrial Trucks – Safety Requirements and Verification, Part 4 Driverless Industrial trucks and their Systems

© Banner Engineering Corp. All rights reserved.

Chapter Contents

3.1 Features 9
3.2 Operating Features 9
3.3 System Description 10
3.4 Appropriate Applications and Limitations 11
3.5 Control Reliability: Redundancy and Self-Checking 12
3.6 Specifications 12

Chapter 3 Introduction

3.1 Features

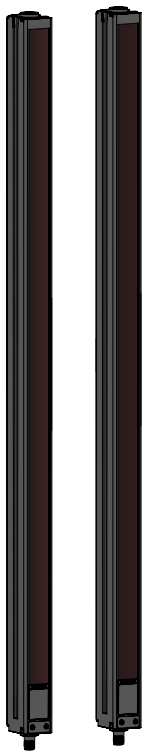

- Optoelectronic safeguarding device creates a screen of synchronized, modulated infrared sensing beams; choose from two resolutions, sized in 150 mm (6 in) increments:
  - 14 mm (0.55 in) resolution models with defined areas from 150 mm to 1.8 m (6 in to 71 in)
  - 30 mm (1.18 in) resolution models with defined areas from 150 mm to 2.4 m (6 in to 94.5 in)
- Compact package for smaller production machines robust for large power presses
- Standard or cascade models available
- Optional remote Test input terminals for simulating a “blocked” condition (available on some emitter models)
- Reduced Resolution (Floating Blanking) is easily configured
- Three-digit display provides diagnostic information and indicates the number of beams blocked
- Zone indicators identify blocked beams
- FMEA tested to ensure control reliability
- Receiver LEDs provide system status and emitter/receiver alignment indications
- Highly immune to EMI, RFI, ambient light, weld flash, and strobe light
- Two-piece design with external device monitoring
- Aux. output option to monitor the state of the output signal switching device (OSSD)
- Vibration-tolerant, factory burned-in emitter and receiver circuitry for toughness and dependability
- Up to four pairs of emitters and receivers of different lengths can be cascaded (SLSC.. models)
- Safety PLC input compatible (per output signal switching device specifications)

3.2 Operating Features

The Banner EZ-SCREEN SLS Safety Light Curtain models described by this manual feature standard functions:

- Reduced Resolution (Floating Blanking) (see "Reduced Resolution/Floating Blanking" on page 36)
- Trip or Latch Output (see "Selectable Trip/Latch Outputs" on page 51)
- External Device Monitoring (EDM) (see "External Device Monitoring" on page 42)
- Auxiliary Output (see "Auxiliary (Aux.) Output" on page 43)
- Scan Code (see "System Configuration Settings" on page 49)
- Fixed Blanking (see "Fixed Blanking" on page 36)
- Inverted Display (see "Inverted Display" on page 51)
- Cascading (available on SLPC.. models) (see "Cascade" on page 63)

These functions are configured via DIP switches (behind the access door on the front of each sensor) and/or the sensor wiring configuration. The sensing resolution is determined by the emitter and receiver model.

© Banner Engineering Corp. All rights reserved.
www.bannerengineering.com

3.3 System Description

> **NOTE:** This manual refers to an emitter (light curtain), its receiver (light curtains), and their cabling as "a System".

Banner EZ-SCREEN SLS emitters and receivers provide a redundant, microprocessor-controlled, opposed-mode optoelectronic "curtain of light", or "safety light screen". EZ-SCREEN SLS typically is used for point-of-operation safeguarding, and is suited to safeguard a variety of machinery.

The EZ-SCREEN SLS is a two-piece (two-box) system comprising an emitter and a receiver, but no external controller. The external device monitoring (EDM) function ensures the fault detection capability required by EN ISO 13849-1 Categories 3, 4, and PL d or e without a third box, a controller or a "smart" (self-checking) safety module required of systems without EDM.

The EZ-SCREEN SLS emitters have a row of synchronized modulated infrared (invisible) light-emitting diodes (LEDs) in a compact metal housing. Receivers have a corresponding row of synchronized photodetectors. The light screen created by the emitter and receiver is called the defined area; its width and height are determined by the length of the sensor pair and the distance between them. The maximum range is dependent on the resolution; range decreases if corner mirrors are used. Emitter and receiver pairs with 14 mm (0.55 in) resolution have a maximum range of 6 m (20 ft), and pairs with 30 mm (1.18 in) resolution have a maximum range of 18 m (60 ft).

In typical operation, if any part of an operator’s body (or any opaque object) of more than a pre-determined cross section is detected, the solid-state output signal switching device (OSSD) safety outputs turn OFF. These safety outputs are connected to the guarded machine’s final switching device (FSD) that control the machine primary control element (MPCEs), which immediately stops the motion of the guarded machine.

An auxiliary (aux.) output may be used to signal the state of the OSSDs to a process controller (see "External Device Monitoring" on page 42.

Electrical connections are made through M12 quick-disconnects. Some emitter models have a 5-pin connector for power and the Test function. Other emitters and all receivers have an 8-pin connector for power, ground, inputs, and outputs.

Functions such as Trip/Latch select, Display Invert, Cascading, Fixed Blanking, Reduced Resolution (Floating Blanking), Scan Code Select, and External Device Monitoring are described in "Features" on page 9. An auxiliary (aux.) output may be used to signal the state of the OSSDs to a process controller. All models require a supply voltage of +24 V DC ±15%.

Both emitter and the receiver feature 7-segment diagnostic displays and individual LEDs to provide continuous indication of operating status, configuration, and error conditions.

Figure 1. EZ-SCREEN: Typical Application

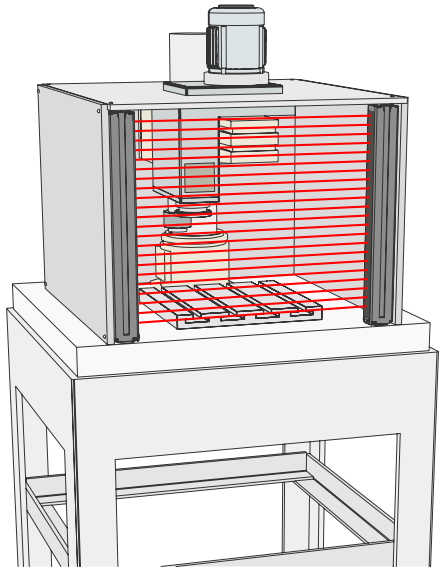

© Banner Engineering Corp. All rights reserved.
www.bannerengineering.com

3.4 Appropriate Applications and Limitations

WARNING:
- **Read this Section Carefully Before Installing the System**
- **Failure to follow these instructions could result in serious injury or death.**
- If all mounting, installation, interfacing, and checkout procedures are not followed properly, this Banner Engineering Corp. device cannot provide the protection for which it was designed.
- The user is responsible for ensuring that all local, state, and national laws, rules, codes, or regulations relating to the installation and use of this control system in any particular application are satisfied. Ensure that all legal requirements have been met and that all technical installation and maintenance instructions contained in this manual are followed.
- The user has the sole responsibility to ensure that this Banner Engineering Corp. device is installed and interfaced to the guarded machine by Qualified Persons, in accordance with this manual and applicable safety regulations. A Qualified person is a person who, by possession of a recognized degree or certificate of professional training, or who, by extensive knowledge, training and experience, has successfully demonstrated the ability to solve problems relating to the subject matter and work.

The Banner EZ-SCREEN SLS is intended for point-of-operation guarding and other safeguarding applications. It is the user's responsibility to verify whether the safeguarding is appropriate for the application and is installed, as instructed by this manual, by a Qualified Person.

The ability of the EZ-SCREEN SLS to perform its safeguarding function depends upon the appropriateness of the application and upon its proper mechanical and electrical installation and interfacing to the guarded machine. **If all mounting, installation, interfacing, and checkout procedures are not followed properly, the EZ-SCREEN SLS cannot provide the protection for which it was designed**.

WARNING:
- **Install System Only on Appropriate Applications**
- Failure to follow these instructions could result in serious injury or death.
- Use Banner's EZ-SCREEN SLS only on machinery that can be stopped immediately after a stop signal is issued at any point in the machine's stroke or cycle, such as machines with a part-revolution clutch. Under no circumstances may the EZ-SCREEN SLS be used on full-revolution clutched machinery or in unsuitable applications.
- If there is any doubt about whether or not your machinery is compatible with the EZ-SCREEN SLS, contact Banner Engineering.

3.4.1 Examples: Appropriate Applications

EZ-SCREEN SLS is typically used for, but is not limited to, the following applications:

- Small assembly equipment
- Automated production equipment
- Robotic work cells
- Molding and power presses
- Assembly and packaging machines
- Lean manufacturing systems

3.4.2 Examples: Inappropriate Applications

Do not use EZ-SCREEN SLS in the following applications:

- With any machine that cannot be stopped immediately after a stop signal is issued, such as single-stroke (or full-revolution) clutched machinery
- With any machine with inadequate or inconsistent machine response time and stopping performance
- With any machine that ejects materials or component parts through the defined area
- In any environment that is likely to adversely affect photoelectric sensing efficiency. For example, corrosive chemicals or fluids or unusually severe levels of smoke or dust, if not controlled, may degrade sensing efficiency

© Banner Engineering Corp. All rights reserved.
www.bannerengineering.com

- As a tripping device to initiate or reinitiate machine motion (PSDI applications), unless the machine and its control system fully comply with the relevant standard or regulation (seeOSHA 29CFR1910.217, NFPA 79, ANSI B11.19, ISO 12100, IEC 60204-1, IEC 61496-1, or other appropriate standard)

If an EZ-SCREEN SLS is installed for use as a perimeter guard (where a pass-through Hazard-Point.dita may exist, see "Reducing or Eliminating Pass-Through Hazards" on page 22), the dangerous machine motion can be initiated by normal means only after the safeguarded area is clear of individuals and the EZ-SCREEN SLS has been manually reset.

3.5 Control Reliability: Redundancy and Self-Checking

Redundancy requires that EZ-SCREEN SLS circuit components be backed up to the extent that if the failure of a single component will prevent effective machine stopping action when needed, that component must have a redundant counterpart that will perform the same function. The EZ-SCREEN SLS is designed with redundant microprocessors for control reliability.

Redundancy must be maintained whenever the EZ-SCREEN SLS is in operation. Because a redundant system is no longer redundant after a component has failed, EZ-SCREEN SLS is designed to monitor itself continuously. A component failure detected by or within the self-checking system causes a stop signal to be sent to the guarded machine and puts the EZ-SCREEN SLS into a lockout condition.

A recovery from this type of lockout condition requires:

- Replacement of the failed component (to restore redundancy)
- The appropriate reset procedure

The Diagnostic Display is used to diagnose the causes of a lockout condition. See "Troubleshooting" on page 79.

3.6 Specifications

3.6.1 General Specifications

Short Circuit Protection
All inputs and outputs are protected from short circuits to +24 V DC or DC common

Electrical Safety Class
III (per IEC 61140)

Safety Rating
Type 4 per IEC 61496-1, -2

Category 4 PL e per EN ISO13849-1

SIL3 per IEC 61508; SIL CL3 per IEC 62061

PFHd: 4.3×10^{-9}

Operating Range
14 mm models: 0.1 m to 6 m (4 in. to 20 ft)

30 mm models: 0.1 m to 18 m (4 in. to 60 ft)

Range decreases with use of mirrors and/or lens shields:

- Lens shields — approx 10% less range per shield
- Glass-surface mirrors — approx 8% less range per mirror

See the specific mirror datasheet for more information.

Resolution
14 mm or 30 mm, depending on model

Effective Aperture Angle (EAA)
Meets Type 4 requirements per IEC 61496-2

±2.5° at 3 m

Certifications

Banner Engineering BV
Park Lane, Culliganlaan 2F bus 3
1831 Diegem, BELGIUM

Operating Conditions
0 °C to +55 °C (+32 °F to +131 °F)

95% maximum relative humidity (non-condensing)

Enclosure
Extruded aluminum housing with black anodized finish standard. (Previously, units had a yellow polyester powder finish; nickel-plated silver finish was an option.) Well-sealed, rugged die-cast zinc end caps, acrylic lens cover, copolyester access cover. (Previously, nickel-plated ESD-safe models were offered with static-dissipative acrylic lens covers.)

Environmental Rating
IP65

Shock and Vibration
Components have passed vibration and shock tests according to IEC 61496-1 (Class 3M4). This includes vibration (30 cycles) of 5 to 150 Hz at 3.5 mm (0.14 in) amplitude and shock of 15 g for 6 milliseconds (600 cycles).

Mounting Hardware
Emitter and receiver each are supplied with a pair of swivel end-mounting brackets. Models 1050 mm and longer also include swivel center-mount bracket(s). Mounting brackets are 8-gauge cold-rolled steel, black zinc finish.

Cables and Connections
See "Cordsets" on page 84

Turck Banner LTD Blenheim House
Blenheim Court
Wickford, Essex SS11 8YT
GREAT BRITAIN

© Banner Engineering Corp. All rights reserved.
www.bannerengineering.com

3.6.2 Emitter Specifications

Supply Voltage at the Device
24 V DC ±15% (use a SELV-rated power supply according to EN IEC 60950). The external voltage supply must be capable of buffering brief mains interruptions of 20 ms, as specified in IEC/EN 60204-1.

Residual Ripple
± 10% maximum

Supply Current
100 mA maximum

Status Indicators
One bi-color (Red/Green) Status Indicator: indicates operating mode, lockout or power Off condition

7-Segment Diagnostic indicator (1 digit): indicates proper operation, scan code, or error code

Wavelength of Emitter Elements
Infrared LEDs, 850 nm at peak emission

Remote Test Input Optional—available only on model SLSE..-..Q5 emitters
Test mode is activated either by applying a low signal (less than 3 V DC) to emitter TEST#1 terminal for a minimum of 50 milliseconds, or by opening a switch connected between TEST#1 and TEST#2 or +24 V DC for a minimum of 50 milliseconds. Beam scanning stops to simulate a blocked condition. A high signal at TEST#1 deactivates Test mode.

High Signal: 10 to 30 V DC

Low Signal: 0 to 3 V DC

Input Current: 35 mA inrush, 10 mA maximum

Controls and Adjustments
Scan Code Selection: 2-position switch (code 1 or 2). Factory default position is code 1.

3.6.3 Receiver Specifications

Supply Voltage at the Device
24 V DC ±15% (use a SELV-rated power supply according to EN IEC 60950). The external voltage supply must be capable of buffering brief mains interruptions of 20 ms, as specified in IEC/EN 60204-1.

Residual Ripple
±10% maximum

Supply Current (no load)
275 mA maximum, exclusive of OSSD1 and OSSD2 loads (up to additional 0.5 A each)

Response Time
Dependent on the number of sensing beams; see the models table for the number of beams and response time.

CSSI Response Time (SLSC.. cascade models only)
Response time for a cascade receiver due to opening contacts at the cascade interface (CSSI): 40 ms max (contacts must open for 60 ms minimum).

Output Signal Switching Devices (OSSDs)
Two redundant solid-state 24 V DC, 0.5 A maximum sourcing OSSD (Output Signal Switching Device) safety outputs. (Use optional interface modules for AC or larger DC loads.) Capable of the Banner "Safety Handshake".

ON-State voltage: ≥ Vin-1.5 V DC

OFF-State voltage: 1.2 V DC maximum (0 to 1.2 V DC)

Maximum load capacitance: 1.0 µF

Minimum load inductance: 10 H

Leakage current: 0.50 mA maximum

Cable resistance: 10 Ω max.

OSSD test pulse width: 100 to 300 microseconds typical

OSSD test pulse period: 10 ms to 27 ms (varies with number of beams)

Switching current: 0 to 0.5 A

Auxiliary Output Switching Capacity
Current-sourcing (PNP) solid-state output, 24 V DC at 75 mA max.

EDM Input
+24 V DC signals from external device contacts can be monitored (one-channel, two-channel, or no monitoring) via EDM1 terminal in the receiver.

High Signal: 10 to 30 V DC at 30 mA typical

Low Signal: 0 to 3 V DC

Dropout Time: 200 ms maximum

Reset Input
Reset input must be high for 0.25 to 2 seconds and then low to reset the receiver

High Signal: 10 to 30 V DC at 30 mA typical

Low Signal: 0 to 3 V DC

Closed Switch Time: 0.25 to 2 seconds

Ambient Light Immunity
10,000 lux at 5° angle of incidence

Controls and Adjustments
Scan Code selection: 2-position switch (code 1 or 2). Factory default position is code 1

Trip/Latch Output selection: Redundant switches. Factory default position is T (trip).

EDM/MPCE Monitor selection: 2-position switch selects between 1- or 2-channel monitoring. Factory default position is 2-channel monitoring.

Reduced Resolution: Redundant switches. Factory default position is Off.

Status Indicators
Amber Reset Indicator: indicates whether the System is ready for operation or requires a reset

Bi-color (red/green) Status indicator: indicates general system and output status

Bi-color (red/green) Zone Status indicators: indicate condition (clear or blocked beam) of a defined group of beams

7-Segment Diagnostic indicator (3 digits): indicates proper operation, scan code, error code, or total number of blocked beams

Strobe Light Immunity
Totally immune to one Federal Signal Corp. "Fireball" model FB2PST strobe

Recovery Time
Blocked to Clear (OSSDs turn On; varies with total number of sensing beams and whether Sync beam is blocked):

Model	Beam 1 (Sync Beam)	All Other Beams
14 mm	109 ms to 800 ms	33 ms to 220 ms
30 mm	81 ms to 495 ms	25 ms to 152 ms

© Banner Engineering Corp. All rights reserved.
www.bannerengineering.com

3.6.4 Dimensions

These are the emitter and receiver mounting dimensions and the location of the defined area.

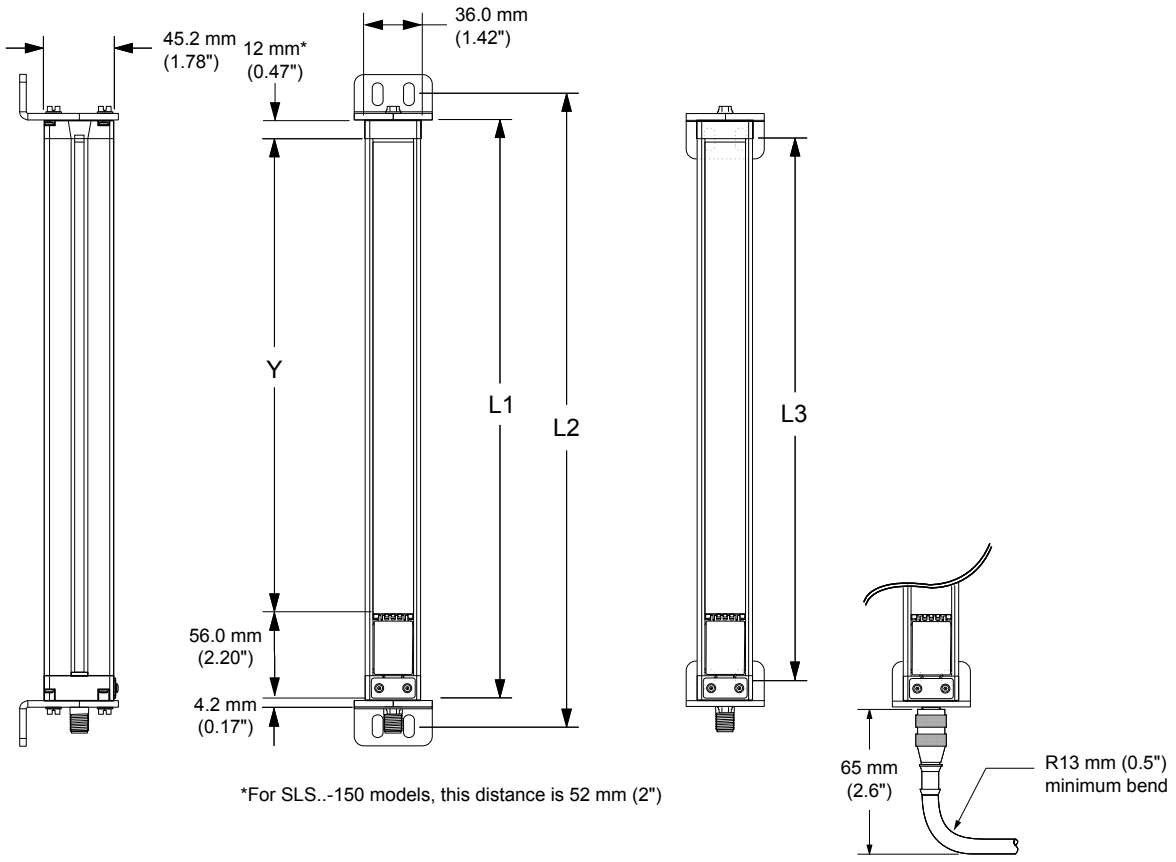

Emitter / Receiver Model	Housing Length L1	Distance Between Bracket Holes		Defined Area[1] Y
		L2	L3	
SLS..-150	262 mm (10.3 in)	295 mm (11.6 in)	237 mm (9.3 in)	150 mm (5.9 in)
SLS..-300	372 mm (14.6 in)	405 mm (16.0 in)	347 mm (13.7 in)	300 mm (11.8 in)
SLS..-450	522 mm (20.6 in)	555 mm (21.9 in)	497 mm (19.6 in)	450 mm (17.7 in)
SLS..-600	671 mm (26.4 in)	704 mm (27.7 in)	646 mm (25.4 in)	600 mm (23.6 in)
SLS..-750	821 mm (32.3 in)	854 mm (33.6 in)	796 mm (31.3 in)	750 mm (29.5 in)
SLS..-900	971 mm (38.2 in)	1004 mm (39.5 in)	946 mm (37.2 in)	900 mm (35.4 in)
SLS..-1050	1120 mm (44.1 in)	1153 mm (45.4 in)	1095 mm (43.1 in)	1050 mm (41.3 in)
SLS..-1200	1270 mm (50.0 in)	1303 mm (51.3 in)	1245 mm (49.0 in)	1200 mm (47.2 in)
SLS..-1350	1420 mm (55.9 in)	1453 mm (57.2 in)	1395 mm (54.9 in)	1350 mm (53.1 in)
SLS..-1500	1569 mm (61.8 in)	1602 mm (63.1 in)	1544 mm (60.8 in)	1500 mm (59.1 in)
SLS..-1650	1719 mm (67.7 in)	1752 mm (69.0 in)	1694 mm (66.7 in)	1650 mm (65.0 in)
SLS..-1800	1869 mm (73.6 in)	1902 mm (74.9 in)	1844 mm (72.6 in)	1800 mm (70.9 in)
SLS..-1950	2018 mm (79.4 in)	2051 mm (80.8 in)	1993 mm (78.5 in)	1950 mm (76.8 in)
SLS..-2100	2168 mm (85.4 in)	2201 mm (86.7 in)	2143 mm (84.4 in)	2100 mm (82.7 in)
SLS..-2250	2318 mm (91.3 in)	2351 mm (92.6 in)	2293 mm (90.3 in)	2250 mm (88.6 in)
SLS..-2400	2468 mm (97.2 in)	2501 mm (98.5 in)	2443 mm (96.2 in)	2400 mm (94.5 in)

[1] Nominal measurement

© Banner Engineering Corp. All rights reserved.
www.bannerengineering.com

3.6.5 End Cap Brackets

Model EZA-MBK-11: End cap brackets are included for emitter or receiver. Dimensions are identical for stainless steel model EZA-MBK-11N for ESD model emitters and receivers.

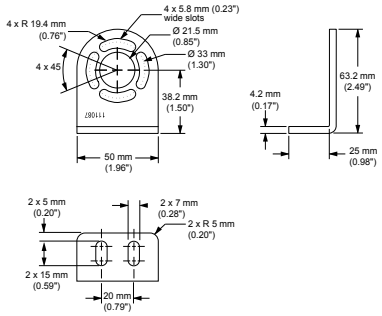

3.6.6 Center Bracket

Model EZA-MBK-12: The center bracket is supplied with emitters and receivers over 1050 mm (3.4 ft) and longer. Dimensions are identical for stainless steel model EZA-MBK-12N for ESD model emitters and receivers.

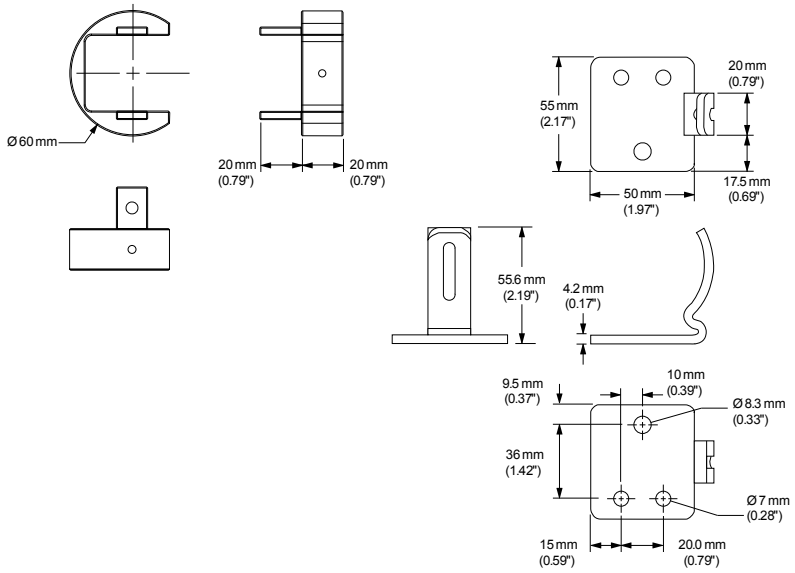

© Banner Engineering Corp. All rights reserved.
www.bannerengineering.com

Chapter Contents

4.1 System Components 16
4.2 Standard Emitter and Receiver Models (Non-Cascadeable) with 14 mm Resolution 17
4.3 Standard Emitter and Receiver Models (Non-Cascadeable) with 30 mm Resolution 17
4.4 Documentation 18

Chapter 4 Components

4.1 System Components

An EZ-SCREEN SLS System includes a compatible emitter (light curtain) and receiver (light curtains) (equal length and resolution; available separately or in pairs), and two cables. Mounting hardware is included with each emitter and receiver. Interfacing solutions include IM-T-.. modules, redundant positively guided contactors, safety modules/controllers, or an optional muting module.

Standard models feature a black anodized aluminum housing.

Standard models are listed with integral QD fitting; to order a 300 mm (12 in) cable with an 8-pin M12 QD fitting, replace the “Q” in the model number with “P”. The 13 mm (0.5 in) minimum bend radius accommodates low-clearance installations. When used in a cascade installation, the cabled models can reduce the number of cables and improve clearance and cable management.

Figure 2. EZ-SCREEN Emitter, Receiver, and Two Interconnecting Cables

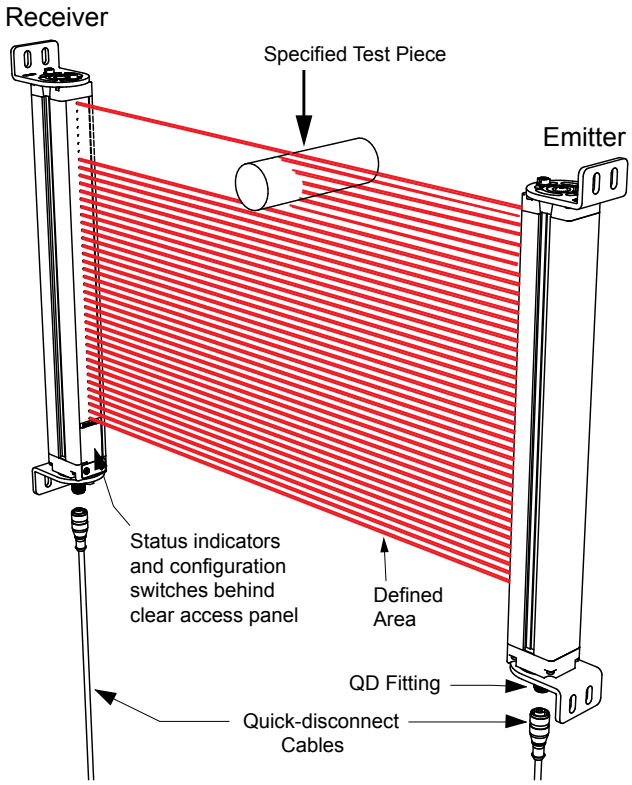

© Banner Engineering Corp. All rights reserved.
www.bannerengineering.com

4.2 Standard Emitter and Receiver Models (Non-Cascadeable) with 14 mm Resolution

The standard 8-pin QD models are listed; 8-pin emitters/receivers feature “swapable” wiring. Order one 8-pin cable for each 8-pin emitter or receiver, or one 5-pin cable for each 5-pin emitter.

For cascadeable 14 mm emitter and receiver models, see "Cascadeable Emitter and Receiver Models with 14 mm Resolution" on page 64.

Defined Area Height	Standard 14 mm Resolution Models 0.1 m to 6 m (4 in to 20 ft) range				
	Emitter (8-pin)	Receiver	Emitter/Receiver Pair	Number of Beams	Response Time (Tr)
150 mm (5.9 in)	**SLSE14-150Q8**	**SLSR14-150Q8**	**SLSP14-150Q88**	20	11 ms
300 mm (11.8 in)	**SLSE14-300Q8**	**SLSR14-300Q8**	**SLSP14-300Q88**	40	15 ms
450 mm (17.7 in)	**SLSE14-450Q8**	**SLSR14-450Q8**	**SLSP14-450Q88**	60	19 ms
600 mm (23.6 in)	**SLSE14-600Q8**	**SLSR14-600Q8**	**SLSP14-600Q88**	80	23 ms
750 mm (29.5 in)	**SLSE14-750Q8**	**SLSR14-750Q8**	**SLSP14-750Q88**	100	27 ms
900 mm (35.4 in)	**SLSE14-900Q8**	**SLSR14-900Q8**	**SLSP14-900Q88**	120	32 ms
1050 mm (41.3 in)	**SLSE14-1050Q8**	**SLSR14-1050Q8**	**SLSP14-1050Q88**	140	36 ms
1200 mm (47.2 in)	**SLSE14-1200Q8**	**SLSR14-1200Q8**	**SLSP14-1200Q88**	160	40 ms
1350 mm (53.1 in)	**SLSE14-1350Q8**	**SLSR14-1350Q8**	**SLSP14-1350Q88**	180	43 ms
1500 mm (59 in)	**SLSE14-1500Q8**	**SLSR14-1500Q8**	**SLSP14-1500Q88**	200	48 ms
1650 mm (65 in)	**SLSE14-1650Q8**	**SLSR14-1650Q8**	**SLSP14-1650Q88**	220	52 ms
1800 mm (70.9 in)	**SLSE14-1800Q8**	**SLSR14-1800Q8**	**SLSP14-1800Q88**	240	56 ms

To order the 5-pin emitters with the Test input, replace the suffix “Q8” with “Q5”, (e.g., SLSE14-150Q5), and for the pair replace “Q88” with “Q85” (e.g., SLSP14-150Q85).

To order the cabled QD (8-pin only) model, replace the “Q” in the model number with “P” (e.g., SLSE14-150P8).

4.3 Standard Emitter and Receiver Models (Non-Cascadeable) with 30 mm Resolution

The standard 8-pin QD models are listed; 8-pin emitters/receivers feature “swapable” wiring. Order one 8-pin cable for each 8-pin emitter or receiver, or one 5-pin cable for each 5-pin emitter.

For cascadeable 30 mm emitter and receiver models, see "Cascadeable Emitter and Receiver Models with 30 mm Resolution" on page 65.

Defined Area Height	Standard 30 mm Resolution Models 0.1 m to 18 m (4 in to 60 ft) range				
	Emitter (8-pin)	Receiver	Emitter/Receiver Pair	Number of Beams	Response Time (Tr)
150 mm (5.9 in)	**SLSE30-150Q8**	**SLSR30-150Q8**	**SLSP30-150Q88**	10	9 ms
300 mm (11.8 in)	**SLSE30-300Q8**	**SLSR30-300Q8**	**SLSP30-300Q88**	20	11 ms
450 mm (17.7 in)	**SLSE30-450Q8**	**SLSR30-450Q8**	**SLSP30-450Q88**	30	13 ms
600 mm (23.6 in)	**SLSE30-600Q8**	**SLSR30-600Q8**	**SLSP30-600Q88**	40	15 ms
750 mm (29.5 in)	**SLSE30-750Q8**	**SLSR30-750Q8**	**SLSP30-750Q88**	50	17 ms
900 mm (35.4 in)	**SLSE30-900Q8**	**SLSR30-900Q8**	**SLSP30-900Q88**	60	19 ms
1050 mm (41.3 in)	**SLSE30-1050Q8**	**SLSR30-1050Q8**	**SLSP30-1050Q88**	70	21 ms
1200 mm (47.2 in)	**SLSE30-1200Q8**	**SLSR30-1200Q8**	**SLSP30-1200Q88**	80	23 ms
1350 mm (53.1 in)	**SLSE30-1350Q8**	**SLSR30-1350Q8**	**SLSP30-1350Q88**	90	25 ms
1500 mm (59 in)	**SLSE30-1500Q8**	**SLSR30-1500Q8**	**SLSP30-1500Q88**	100	27 ms
1650 mm (65 in)	**SLSE30-1650Q8**	**SLSR30-1650Q8**	**SLSP30-1650Q88**	110	30 ms
1800 mm (70.9 in)	**SLSE30-1800Q8**	**SLSR30-1800Q8**	**SLSP30-1800Q88**	120	32 ms
1950 mm (76.8 in)	**SLSE30-1950Q8**	**SLSR30-1950Q8**	**SLSP30-1950Q88**	130	34 ms

Continued on page 18

© Banner Engineering Corp. All rights reserved.
www.bannerengineering.com

Continued from page 17

Defined Area Height	Standard 30 mm Resolution Models 0.1 m to 18 m (4 in to 60 ft) range				
	Emitter (8-pin)	Receiver	Emitter/Receiver Pair	Number of Beams	Response Time (Tr)
2100 mm (82.7 in)	**SLSE30-2100Q8**	**SLSR30-2100Q8**	**SLSP30-2100Q88**	140	36 ms
2250 mm (88.6 in)	**SLSE30-2250Q8**	**SLSR30-2250Q8**	**SLSP30-2250Q88**	150	38 ms
2400 mm (94.5 in)	**SLSE30-2400Q8**	**SLSR30-2400Q8**	**SLSP30-2400Q88**	160	40 ms

To order the 5-pin emitters with the Test input, replace the suffix “Q8” with “Q5”, (e.g., SLSE30-150Q5), and for the pair replace “Q88” with “Q85” (e.g., SLSP30-150Q85).

To order the cabled QD (8-pin only) model, replace the “Q” in the model number with “P” (e.g., SLSE30-150P8).

4.4 Documentation

The following documentation can be downloaded from www.bannerengineering.com.

Part Number	Description
112852	EZ-SCREEN 14/30mm System Instruction Manual
113361	Checkout Procedure Card (Daily) – Stand-Alone Systems
118173	Checkout Procedure Card (Daily) – Cascaded Systems
113362	Checkout Procedure Card (Semi-Annual)
114189	Diagnostic Display Label

© Banner Engineering Corp. All rights reserved.
www.bannerengineering.com

Chapter Contents

5.1 Installation and Alignment 19
5.2 Mechanical Installation Considerations 19
5.3 Mounting the Emitter and Receiver 29
5.4 Sensor Mounting and Mechanical Alignment 30
5.5 Mounting the Reset Switch 31
5.6 Routing Cordsets 31
5.7 Initial Electrical Connections 32
5.8 Initial Checkout Procedure 33
5.9 Electrical Connections to the Guarded Machine 39
5.10 Auxiliary (Aux.) Output 43
5.11 Remote Test Input 43
5.12 Preparing for System Operation 43
5.13 Sensor "Swapability" 43
5.14 Wiring Diagrams 44

Chapter 5 Installation Instructions

5.1 Installation and Alignment

Before installing the EZ-SCREEN SLS Safety Light Curtain, read "Appropriate Applications and Limitations" on page 11 and the installation instructions of the EZ-SCREEN SLS Safety Light Curtain manual (p/n 112852) in their entirety.

The System's ability to perform its safety guarding function depends upon the appropriateness of the application and upon its proper mechanical and electrical installation and interfacing to the guarded machine. If all mounting, installation, interfacing, and checkout procedures are not followed properly, the System cannot provide the protection for which it was designed. Installation must be performed by a Qualified Person, as defined in "Security Protocol" on page 49.

WARNING:

- **Read this Section Carefully Before Installing the System**
- **Failure to follow these instructions could result in serious injury or death.**
- If all mounting, installation, interfacing, and checkout procedures are not followed properly, this Banner Engineering Corp. device cannot provide the protection for which it was designed.
- The user is responsible for ensuring that all local, state, and national laws, rules, codes, or regulations relating to the installation and use of this control system in any particular application are satisfied. Ensure that all legal requirements have been met and that all technical installation and maintenance instructions contained in this manual are followed.
- The user has the sole responsibility to ensure that this Banner Engineering Corp. device is installed and interfaced to the guarded machine by Qualified Persons, in accordance with this manual and applicable safety regulations. A Qualified person is a person who, by possession of a recognized degree or certificate of professional training, or who, by extensive knowledge, training and experience, has successfully demonstrated the ability to solve problems relating to the subject matter and work.

5.2 Mechanical Installation Considerations

The two primary factors that influence the layout of the EZ-SCREEN SLS system mechanical installation are:

- Minimum distance/safety distance (see "Calculating the Safety Distance (Minimum Distance)" on page 20)
- Eliminating pass-through hazard/hazard points via supplemental guarding (see "Reducing or Eliminating Pass-Through Hazards" on page 22)

Other considerations include:

- Emitter and Receiver Orientation (see "Emitter and Receiver Orientation" on page 24)
- Adjacent Reflective Surfaces (see "Adjacent Reflective Surfaces" on page 25)
- Use of Corner Mirrors (see "Use of Corner Mirrors" on page 27)
- Installation of Multiple Systems (see "Installation of Multiple Systems" on page 28)

© Banner Engineering Corp. All rights reserved.
www.bannerengineering.com

WARNING:
- **Position the System Components Carefully**
- Failure to observe this warning could result in serious injury or death.
- Position the system components such that the hazard point/hazard cannot be accessed by reaching over, under, around, or through the sensing field. Additional and supplemental guarding may be required.

5.2.1 Calculating the Safety Distance (Minimum Distance)

The safety distance (Ds), also called Minimum Distance (S), is the minimum distance required between the defined area and the closest reachable hazard point. The distance is calculated so that when an object or a person is detected (by blocking a sensing beam), the EZ-SCREEN SLS sends a stop signal to the machine, causing it to stop by the time the object or person can reach any machine hazard point.

The distance is calculated differently for U.S. and European installations. Both methods take into account several factors, including a calculated human speed, the total system stopping time (which itself has several components), and the depth penetration factor. After the distance has been determined, record the calculated distance on the Daily Checkout Card.

WARNING:
- **Calculate the Safety Distance (Minimum Distance)**
- Failure to establish and maintain the safety distance (minimum distance) could result in serious injury or death.
- Mount the components at a distance from the nearest hazard such that an individual cannot reach the hazard before cessation of the hazardous motion or situation. Calculate this distance using the supplied formulas, as described by ANSI B11.19 and ISO 13855. Mount the components more than 100 mm (4 in) away from the hazard, regardless of the calculated value.

WARNING: Reduced Resolutions increases Dpf (or C). Increase the depth penetration factor to calculate proper minimum distance when using a Reduced Resolution configuration. Always turn Reduced Resolution mode off when the larger minimum object detection size is not required.

Figure 3. Safety distance (minimum distance) and hard (fixed) guarding

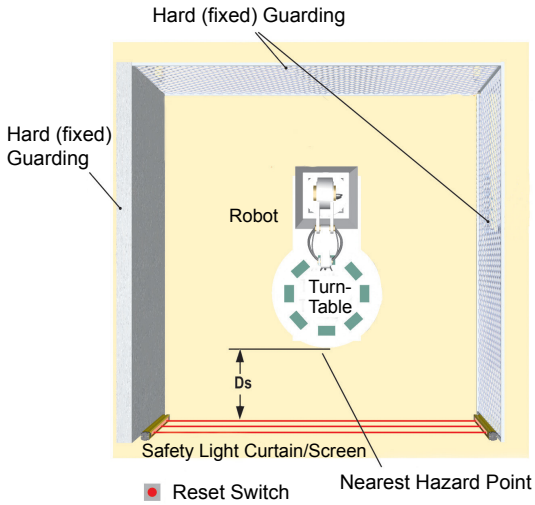

Formula and Examples

U.S. Applications—The Safety (Separation) Distance formula for U.S. applications:

```
Ds = K × (Ts + Tr) + Dpf
```

Ds
the Safety Distance, in inches

K

© Banner Engineering Corp. All rights reserved.
www.bannerengineering.com

1600 mm per second (or 63 in per second), the OSHA 29CFR1910.217, and ANSI B11.19 recommended hand-speed constant (see Note 1 below)

Ts
the overall stop time of the machine (in seconds) from the initial stop signal to the final ceasing of all motion, including stop times of all relevant control elements (for example, IM-T-.. Interface Modules) and measured at maximum machine velocity (see Note 3 below)

Tr
the maximum response time, in seconds, of the EZ-SCREEN SLS emitter/receiver pair (depending on model)

Dpf
the added distance due to the depth penetration factor as prescribed in OSHA 29CFR1910.217, and ANSI B11.19 for U.S. applications. See Depth Penetration Factor (Dpf) table below or calculate using the formula (in mm): Dpf = 3.4 × (S - 7) where S is the resolution of the light curtain (for S ≤ 63 mm).

European Applications—The Minimum Distance formula for European applications:

```
S = (K × T) + C
```

S
the Minimum Distance, in mm, from danger zone to light screen center line; minimum allowable distance is 100 mm (175 mm for non-industrial applications), regardless of calculated value

K
hand-speed constant (see Note 2 below); **2000 mm/s** (for Minimum Distances ≤ 500 mm) **1600 mm/s** (for Minimum Distances > 500 mm)

T
the overall machine stopping response time (in seconds), from the physical initiation of the safety device and the machine coming to a stop (or the hazard removed). This can be broken down into two parts: **Ts** and **Tr** where **T** = **Ts** + **Tr**

C
the additional distance, in mm, based on intrusion of a hand or object towards the danger zone prior to actuation of a safety device. Calculate using the formula (in mm):

```
C = 8 × (d - 14)
```

where `d` is the resolution of the light curtain (for `d` ≤ 40 mm).

Table 1. Depth Penetration Factor (Dpf)

Reduced Resolution	Depth Penetration Factor (Dpf)	
	14 mm Systems	30 mm Systems
OFF	24 mm (1 in)	78 mm (3 in)
ON	78 mm (3 in)	180 mm (7 in)

Notes:

1. The OSHA-recommended hand speed constant **K** has been determined by various studies and, although these studies indicate speeds of 1600 mm/sec. (63 in/sec.) to more than 2500 mm/sec. (100 in/sec.), they are not conclusive determinations. Consider all factors, including the physical ability of the operator, when determining the value of **K** to be used.
2. The recommended hand speed constant **K**, derived from data on approach speeds of the body or parts of the body as stated in ISO 13855.
3. **Ts** is usually measured by a stop-time measuring device. If the machine manufacturer's specified stop time is used, at least 20% should be added to allow for possible clutch/ brake system deterioration. This measurement must take into account the slower of the two MPCE channels, and the response time of all devices or controls that react to stop the machine.

WARNING:
- **Stop time (Ts) must include the response time of all devices or controls that react to stop the machine**
- If all devices are not included, the calculated safety distance (Ds or S) will be too short, which can lead to serious injury or death.
- Include the stop time of all relevant devices and controls in your calculations.
- If required, each of the two machine primary control elements (MPCE1 and MPCE2) must be capable of immediately stopping the dangerous machine motion, regardless of the state of the other. These two channels of machine control need not be identical, but the stop time performance of the machine (Ts, used to calculate the safety distance) must take into account the slower of the two channels.

Examples

The following examples show one calculation for US applications and one for European applications.

© Banner Engineering Corp. All rights reserved.
www.bannerengineering.com

Example Calculation for U.S. Applications

K
63 in. per second (the hand speed constant set by OSHA)

Ts
0.32 (0.250 second is specified by the machine manufacturer; plus 20% safety factor; plus 20 ms for interface module IM-T-9A response time)

Tr
0.023 seconds (the specified response time of an SLSP14-600 EZ-SCREEN SLS)

Dpf
3 in

Our example uses a 600 mm system with 14 mm resolution and Reduced Resolution ON, so Dpf is 3 inches. Response time for this example is 0.023 seconds.

Substitute the numbers into the formula as follows:

```
Ds = K × ( Ts + Tr ) + Dpf
```

```
Ds = 63 × (0.32 + 0.023) + 3 = 24.6 in
```

Mount the EZ-SCREEN SLS emitter and receiver so that no part of the defined area will be closer than 24.6 in. to the closest reachable hazard point on the guarded machine.

Example Calculation for European Applications

K
1600 mm per second

T
0.343 (0.250 second specified by machine manufacturer; plus 20% safety factor; plus 20 ms interface module response time), plus 0.023 seconds (the specified **SLSP14-600** response time)

C
8 × (30 - 14) = 128 mm (14 mm resolution, Reduced Resolution ON)

Substitute the numbers into the formula as follows:

```
S = (K × T ) + C
```

```
S = (1600 × 0.343) + 128 = 676.8 mm
```

Mount the EZ-SCREEN SLS emitter and receiver so that no part of the defined area will be closer than 676.8 mm to the closest reachable hazard point on the guarded machine.

5.2.2 Reducing or Eliminating Pass-Through Hazards

A pass-through hazard is associated with applications where personnel may pass through a safeguard, such as the EZ-SCREEN SLS Safety Light Curtain (which issues a stop command to remove the hazard), and then continues into the guarded area. This is common in access and perimeter guarding applications. Subsequently, their presence is no longer detected, and the related danger becomes the unexpected start or restart of the machine while personnel are within the guarded area.

A pass-through hazard typically results from large safety distances calculated from long stopping times, large minimum object sensitivities, reach-over, reach-through, or other installation considerations. A pass-through hazard can be generated with as little as 75 mm (3 in) between the sensing field and the machine frame or hard (fixed) guarding.

Eliminate or reduce pass-through hazards whenever possible. While it is recommended to eliminate the pass-through hazard altogether, this may not be possible due to machine layout, machine capabilities, or other application considerations.

One solution is to ensure that personnel are continually sensed while within the hazardous area. This can be accomplished by using supplemental guarding, such as described by the safety requirements in ANSI B11.19 or other appropriate standards.

An alternative method is to ensure that once the safeguarding device is tripped it will latch and will require a deliberate manual action to reset. This method of safeguarding relies upon the location of the reset switch as well as safe work practices and procedures to prevent an unexpected start or restart (auto start/restart (trip) condition) of the guarded machine. The EZ-SCREEN SLS Safety Light Curtain provides a configurable manual start/restart (latch) function for these applications.

© Banner Engineering Corp. All rights reserved.

WARNING:
- **Use of the Banner device for Access or Perimeter Guarding**
- Failure to observe this warning could result in serious injury or death.
- If a Banner device is installed in an application that results in a pass-through hazard (for example, perimeter guarding), either the Banner device or themachine primary control element (MPCEs) of the guarded machine must cause a Latched response following an interruption of the defined area.
- The reset of this Latched condition may only be achieved by actuating a reset switch that is separate from the normal means of machine cycle initiation.

WARNING:
- **Perimeter guarding applications**
- Failure to observe this warning could result in serious injury or death.
- Use lockout/tagout procedures per ANSI Z244.1, or use additional safeguarding as described by ANSI B11.19 safety requirements or other applicable standards if a passthrough hazard cannot be eliminated or reduced to an acceptable level of risk.

5.2.3 Reset Switch Location

The reset switch must be mounted at a location that complies with the warning and guidelines below. If any hazardous area is not in view from the switch location, additional means of safeguarding must be provided. The switch should be protected from accidental or unintended actuation (for example, through the use of rings or guards).

A key-actuated reset switch provides some operator or supervisory control, as the key can be removed from the switch and taken into the guarded area. However, this does not prevent unauthorized or inadvertent resets due to spare keys in the possession of others, or additional personnel entering the guarded area unnoticed. When considering where to locate the reset switch, follow the guidelines below.

WARNING:
- **Install reset switches properly**
- Failure to properly install reset switches could result in serious injury or death.
- Install reset switches so that they are accessible only from outside, and in full view of, the safeguarded space. Reset switches cannot be accessible from within the safeguarded space. Protect reset switches against unauthorized or inadvertent operation (for example, through the use of rings or guards). If there are any hazardous areas that are not visible from the reset switches, provide additional safeguarding.

All reset switches must be:

- Outside the guarded area
- Located to allow the switch operator a full, unobstructed, view of the entire guarded area while the reset is performed
- Out of reach from within the guarded area
- Protected against unauthorized or inadvertent operation (such as through the use of rings or guards).

IMPORTANT: Resetting a safeguard must not initiate hazardous motion. Safe work procedures require a start-up procedure to be followed and the individual performing the reset to verify that the entire hazardous area/hazard point is clear of all personnel before each reset of the safeguard is performed. If any area cannot be observed from the reset switch location, additional supplemental guarding/ safeguarding must be used: at a minimum, visual and audible warnings of machine start-up.

5.2.4 Supplemental Safeguarding

As described in "Calculating the Safety Distance (Minimum Distance)" on page 20, properly position the EZ-SCREEN SLS such that an individual cannot reach through the defined area and access the hazard point before the machine has stopped.

Additionally, the hazard cannot be accessible by reaching around, under, or over the defined area. To accomplish this,supplemental guarding (hard (fixed) guard, mechanical barriers, such as screens or bars), as described by ANSI B11.19 safety requirements or other appropriate standards, must be installed. Access will then be possible only through the defined

© Banner Engineering Corp. All rights reserved.
www.bannerengineering.com

area of the EZ-SCREEN SLS System or through other safeguarding that prevents access to the hazard (see "Figure: An example of supplemental safeguarding on page 24).

The mechanical barriers used for this purpose are typically called a hard (fixed) guard; there must be no gaps between the hard (fixed) guarding and the defined area. Any openings in the hard (fixed) guarding must comply with the safe opening requirements of ANSI B11.19 or other appropriate standard.

Figure 4. An example of supplemental safeguarding

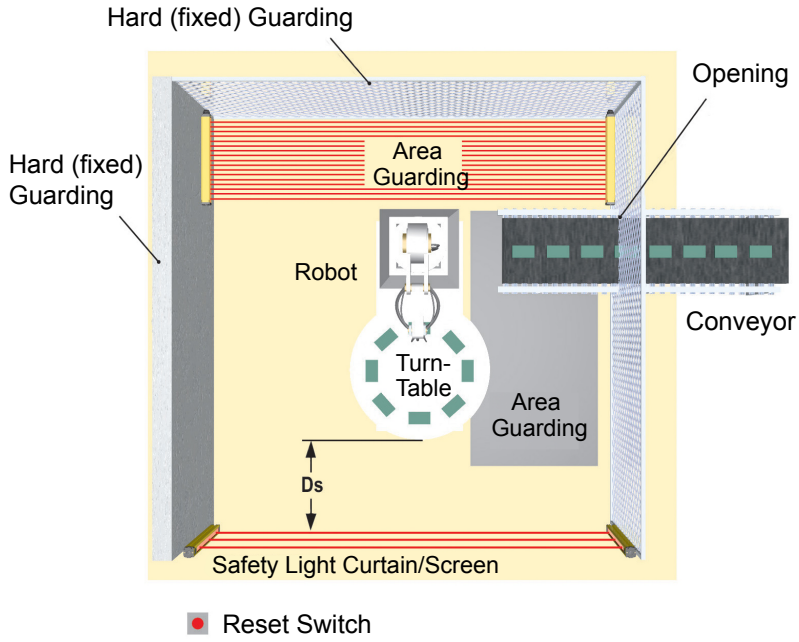

"Figure: An example of supplemental safeguarding on page 24 shows an example of supplemental safeguarding inside a robotic work cell. The EZ-SCREEN SLS, in conjunction with the hard (fixed) guarding, is the primary safeguard. Supplemental safeguarding (such as a horizontal-mounted safety light screen as an area guard) is required in areas that cannot be viewed from the reset switch (for example, behind the robot and the conveyor). Additional supplemental safeguarding may be required to prevent clearance or trapping hazards (for example, a safety mat as an area guard between the robot, the turntable, and the conveyor).

WARNING:

- **The hazard must be accessible only through the sensing field**
- Incorrect system installation could result in serious injury or death.
- The installation of the EZ-SCREEN SLS must prevent any individual from reaching around, under, over or through the defined area and into the hazard without being detected.
- See OSHA CFR 1910.217, ANSI B11.19, and/or ISO 14119, ISO 14120 and ISO 13857 for information on determining safety distances and safe opening sizes for your guarding device. Mechanical barriers (for example, hard (fixed) guarding) or supplemental safeguarding might be required to comply with these requirements.

5.2.5 Emitter and Receiver Orientation

The emitter (light curtain) and receiver (light curtains) must be mounted parallel to each other and aligned in a common plane, with both machine interface cable ends pointing in the same direction.

Never mount the emitter with its machine interface cable end oriented in the opposite direction of the cable end of the receiver. If this occurs, voids in the light curtain may allow objects or personnel to pass through the defined area undetected.

The emitter and receiver may be oriented in a vertical or horizontal plane, or at any angle between horizontal and vertical, as long as they are parallel to each other and their cable ends point in the same direction. Verify that the light curtain completely covers all access to the hazard point that is not already protected by hard (fixed) guard or other supplemental guarding.

© Banner Engineering Corp. All rights reserved.
www.bannerengineering.com

WARNING:

- **Properly install system components**
- Incorrectly orienting the system components impairs the performance of the system and results in incomplete guarding, which can result in serious injury or death.
- Install the system components with their corresponding cable ends pointing in the same direction.

Figure 5. Examples of Correct Emitter/Receiver Orientation

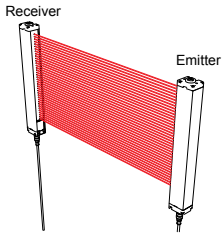

Both cable ends down

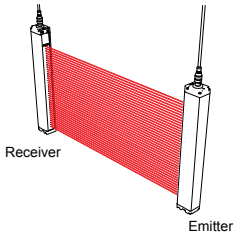

Both cable ends up

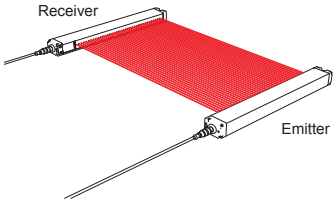

Orientation parallel to floor with both cable ends pointing in the same direction

Figure 6. Examples of Incorrect Emitter/Receiver Orientation

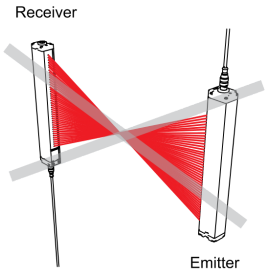

Cable ends point in opposite directions

Problem: Voids in defined area

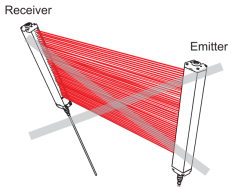

Emitter and receiver not parallel to each other

Problem: Reduced excess gain

5.2.6 Adjacent Reflective Surfaces

WARNING:

- **Do not install the system near reflective surfaces**
- Reflective surfaces could reflect the sensing beam(s) around an object or person within the defined area, preventing detection by the system. Failure to prevent reflection problems results in incomplete guarding and an optical short circuit that could result in serious injury or death.
- Do not locate the defined area near a reflective surface. Perform the trip test, as described in the product documentation, to detect such reflection(s).

A reflective surface located adjacent to the defined area may deflect one or more beams around an object in the defined area. In the worst case, an optical short circuit may occur, allowing an object to pass undetected through the defined area.

This reflective surface may result from shiny surfaces or glossy paint on the machine, the workpiece, the work surface, the floor, or the walls. Beams deflected by reflective surfaces are discovered by performing the trip test and the periodic checkout procedures. To eliminate problem reflections:

- If possible, relocate the sensors to move the beams away from the reflective surface(s), being careful to maintain adequate separation distance
- Otherwise, if possible, paint, mask, or roughen the shiny surface to reduce its reflectivity
- Where these are not possible (as with a shiny workpiece or machine frame), determine the worst-case resolution resulting from the optical short circuit and use the corresponding depth penetration factor (Dpf or C) in the Safety Distance (Minimum Distance) formula; or mount the sensors in such a way that the receiver's field of view and/or the emitter's spread of light are restricted from the reflective surface

© Banner Engineering Corp. All rights reserved.
www.bannerengineering.com

- Repeat the trip test (see "Perform a Trip Test" on page 37) to verify these changes have eliminated the problem reflection(s). If the workpiece is especially reflective and comes close to the defined area, perform the trip test with the workpiece in place

Figure 7. Adjacent reflective surfaces - front view

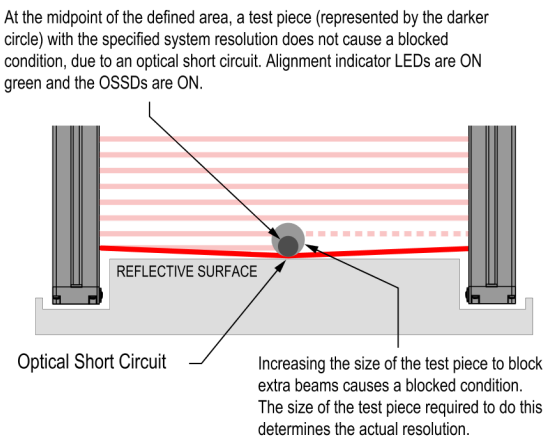

Figure 8. Adjacent reflective surfaces - top and side views

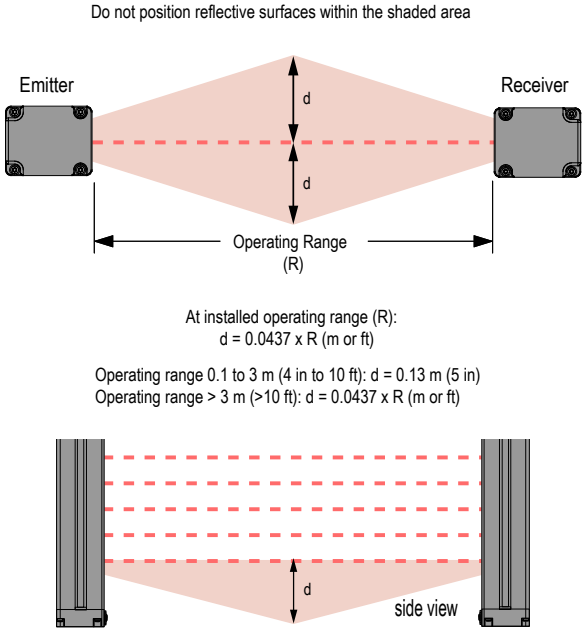

At installed operating range (R): d = 0.0437 x R (m or ft)

Operating range 0.1 to 3 m (4 in to 10 ft): d = 0.13 m (5 in)

Operating range > 3 m (>10 ft): d = 0.0437 x R (m or ft)

At the midpoint of the defined area, a test piece (represented by the darker circle) with the specified system resolution does not cause a blocked condition due to an optical short circuit. Green Alignment indicator lights are On and the OSSDs are On. Increasing the size of the test piece to block additional beams causes a blocked condition. The size of the test piece required to do this determines the actual resolution. Use the table below to calculate Dpf or Factor "C" when a shiny surface causes an optical short circuit.

Test Piece Model	Resolution	Depth Penetration Factor for U.S. Applications	Factor "C" for European Applications
STP-13	14 mm	24 mm (1 in)	0 mm
STP-2	19 mm	41 mm (1.6 in)	40 mm (1.6 in)
STP-16	25 mm	61 mm (2.5 in)	88 mm (3.5 in)

Continued on page 27

© Banner Engineering Corp. All rights reserved.
www.bannerengineering.com

Continued from page 26

Test Piece Model	Resolution	Depth Penetration Factor for U.S. Applications	Factor "C" for European Applications
STP-14	30 mm	78 mm (3 in)	128 mm (5 in)
STP-4	32 mm	85 mm (3.3 in)	144 mm (5.7 in)
STP-17	34 mm	92 mm (3.6 in)	160 mm (6.3 in)
STP-1	38 mm	106 mm (4.2 in)	192 mm (7.6 in)
STP-3	45 mm	129 mm (5 in)	850 mm (33.5 in)
STP-8	51 mm	150 mm (5.9 in)	850 mm (33.5 in)
STP-5	58 mm	173 mm (6.8 in)	850 mm (33.5 in)
STP-15	60 mm	180 mm (7 in)	850 mm (33.5 in)
STP-12	62 mm	187 mm (7.4 in)	850 mm (33.5 in)

5.2.7 Use of Corner Mirrors

EZ-SCREEN SLS may be used with one or more corner mirrors. Mirrors are not allowed for applications that would allow undetected personnel access into the safeguarded area. The use of glass-surface corner mirrors reduces the maximum specified emitter/receiver separation by approximately 8 percent per mirror, as follows:

Table 2. Light Curtain Maximum Range

Light Curtain Series	0 Mirrors	1 Mirror	2 Mirrors	3 Mirrors	4 Mirrors
SLC4 Safety Light Curtain	2 m (6.6 ft)	1.8 m (5.9 ft)	1.6 m (5.2 ft)	1.5 m (4.9 ft)	1.4 m (4.6 ft)
EZ-SCREEN® LP Basic (SLPVA)	4 m (13 ft)	3.7 m (12.1 ft)	3.4 m (11.2 ft)	3.1 ft m (10.3 ft)	2.8 m (9.2 ft)
14 mm EZ-SCREEN® (SLS)	6 m (20 ft)	5.6 m (18.4 ft)	5.2 m (17.0 ft)	4.8 m (15.7 ft)	4.4 m (14.5 ft)
EZ-SCREEN® LP (SLP)	7 m (23 ft)	6.5 m (21.2 ft)	6.0 m (19.5 ft)	5.5 m (18.0 ft)	5.1 m (16.6 ft)
EZ-SCREEN® LS Basic (SLLV)	8 m (26.2 ft)	7.4 m (24.3 ft)	6.8 m (22.3 ft)	6.2 m (20.3 ft)	5.7 m (18.7 ft)
EZ-SCREEN® LS (SLL)	12 m (39 ft)	11 m (36 ft)	10.1 m (33 ft)	9.3 m (30.5 ft)	8.6 m (28 ft)
S4B Safety Light Curtain	12 m (39 ft)	11 m (36 ft)	10.1 m (33 ft)	9.3 m (30.5 ft)	8.6 m (28 ft)
EZ-SCREEN® Type 2 (LS2)	15 m (50 ft)	13.8 m (45 ft)	12.7 m (42 ft)	11.7 m (38 ft)	10.8 m (35 ft)
30 mm EZ-SCREEN® (SLS)	18 m (60 ft)	16.8 m (55 ft)	15.5 m (51 ft)	14.3 m (47 ft)	13.1 m (43 ft)

See the specific mirror datasheet or www.bannerengineering.com for more information.

If mirrors are used, the difference between the angle of incidence from the emitter to the mirror and from the mirror to the receiver must be between 45° and 120° (see "Figure: Using EZ-SCREEN SLS sensors in a retroreflective mode on page 28). If placed at a sharper angle, an object in the light screen may deflect beam(s) to the receiver, preventing the object from being detected, also know as false proxing. Angles greater than 120° result in difficult alignment and possible optical short circuits.

WARNING:

- **Retroreflective Mode Installation**
- Failure to follow these instructions may create unreliable sensing and may result in serious injury or death.
- Do not install emitters and receivers in retroreflective mode with less than a 45° angle of incidence. Install emitters and receivers at an appropriate angle.

© Banner Engineering Corp. All rights reserved.
www.bannerengineering.com

Figure 9. Using EZ-SCREEN SLS sensors in a retroreflective mode

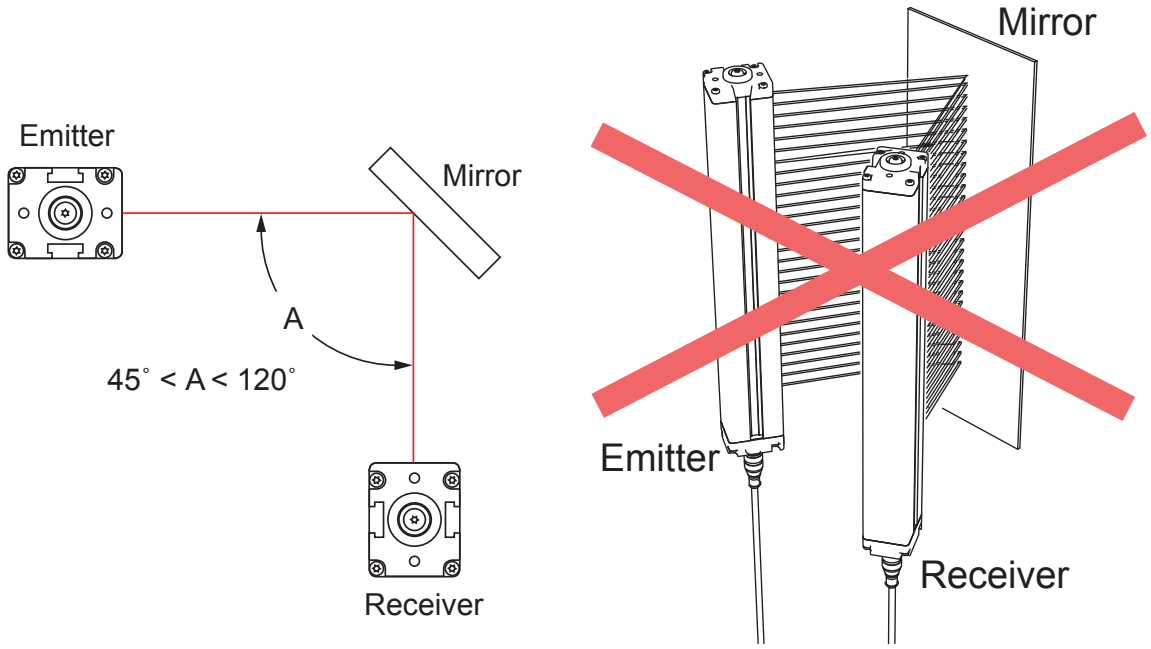

5.2.8 Installation of Multiple Systems

Whenever two or more EZ-SCREEN SLS emitter and receiver pairs are adjacent to one another, optical crosstalk may take place between the systems. To minimize optical crosstalk, alternate the positions of the emitters and receivers or alternate Scan Codes.

When three or more systems are installed in the same plane (as shown), optical crosstalk may occur between sensor pairs whose emitter and receiver lenses are oriented in the same direction. In this situation, eliminate optical crosstalk by mounting these sensor pairs exactly in line with each other within one plane or by adding a mechanical barrier between the pairs.

To further aid in avoiding crosstalk, the sensors feature two selectable scan codes. A receiver set to one scan code will not respond to an emitter set to another code.

Figure 10. Two systems installed in a horizontal plane

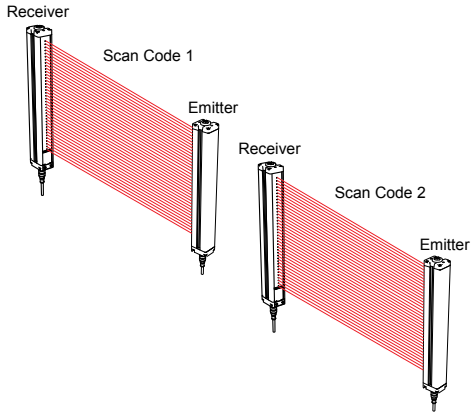

Figure 11. Two or three systems stacked (or alternate receiver/emitter positions)

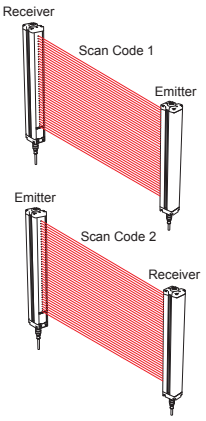

Continued on page 29

© Banner Engineering Corp. All rights reserved.
www.bannerengineering.com

Continued from page 28

Figure 12. Two systems installed at right angles

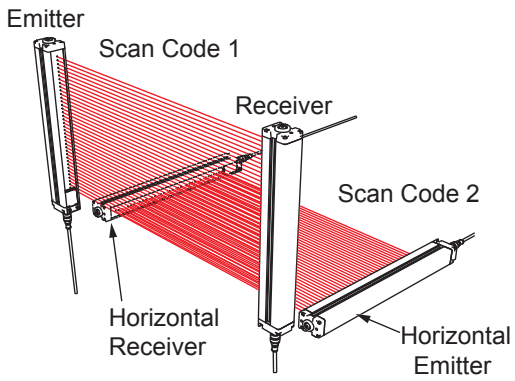

Figure 13. Multiple systems installed in a line

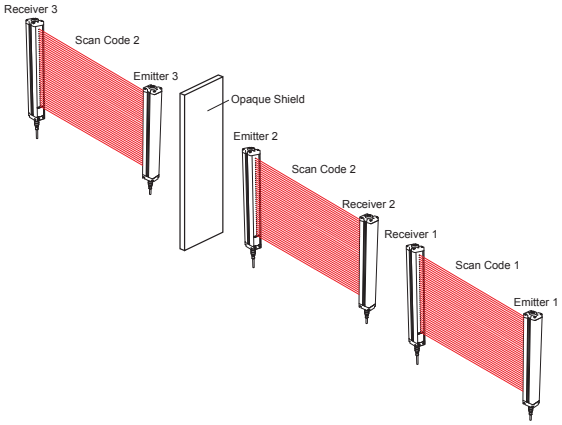

WARNING:

- **Properly connect multiple pairs of sensors**
- Connecting multiple output signal switching devices (OSSD) safety outputs to one interface module or otherwise parallel OSSD outputs can result in serious bodily injury or death, and is prohibited.
- Do not connect multiple pairs of sensors to a single device.

WARNING:

- **Use a scan code**
- If you do not use a scan code, a receiver can synchronize to the signal from the wrong emitter, reducing the safety function of the light curtain and creating an unsafe condition that could result in serious injury or death.
- Configure adjacent systems to use different scan codes (for example, set one system to use scan code 1 and the other system to use scan code 2). Perform a trip test to confirm the light curtain function.

5.3 Mounting the Emitter and Receiver

The emitter (light curtain)/receiver (light curtains) pairs with 14 mm (0.55 in) resolution may be spaced from 0.1 m to 6 m (4 in to 20 ft) apart. Emitter/receiver pairs with 30 mm (1.18 in) resolution may be spaced from 0.1 m to 18 m (4 in to 60 ft) apart. The maximum distance between an emitter and its receiver is reduced if corner mirrors are used (see "Use of Corner Mirrors" on page 27). The supplied brackets allow ±30° rotation when mounted to the sensor end caps.

From a common point of reference, ensuring the safety distance (minimum distance) calculated in "Calculating the Safety Distance (Minimum Distance)" on page 20, make measurements to locate the emitter and receiver in the same plane, with their midpoints and display ends directly opposite each other. Mount the emitter and receiver mounting brackets using the supplied M6 bolts and Keps nuts, or user-supplied hardware.

NOTE: The connector ends of both sensors must point in the same direction (see "Emitter and Receiver Orientation" on page 24).

Mount the emitter and receiver in their brackets; position their windows directly facing each other. Measure from a reference plane (for example, a level building floor) to the same point(s) on the emitter and receiver to verify their mechanical alignment. Use a carpenter's level, a plumb bob, or the optional LAT-1 Laser Alignment Tool (see "Accessories" on page 84), or check the diagonal distances between the sensors to achieve mechanical alignment. Final alignment procedures are explained in "Initial Checkout Procedure" on page 33.

© Banner Engineering Corp. All rights reserved.
www.bannerengineering.com

Center mounting brackets must be used with longer sensors if they are subject to shock or vibration. In such situations, the sensors are designed to be mounted with up to 900 mm (35.43 in) unsupported distance (between brackets). Sensors 1050 mm (45.33 in) and longer are supplied with a center bracket to be used as needed with the standard end-cap brackets.

1. Attach the center bracket to the mounting surface when mounting the end-cap brackets.
2. Attach the clamp to both slots of the housing, using the included M5 screws and T-nuts.
3. After the sensor is mounted to the end-cap brackets, attach the clamp to the center bracket using the supplied M5 screw.

Figure 14. Sensor brackets

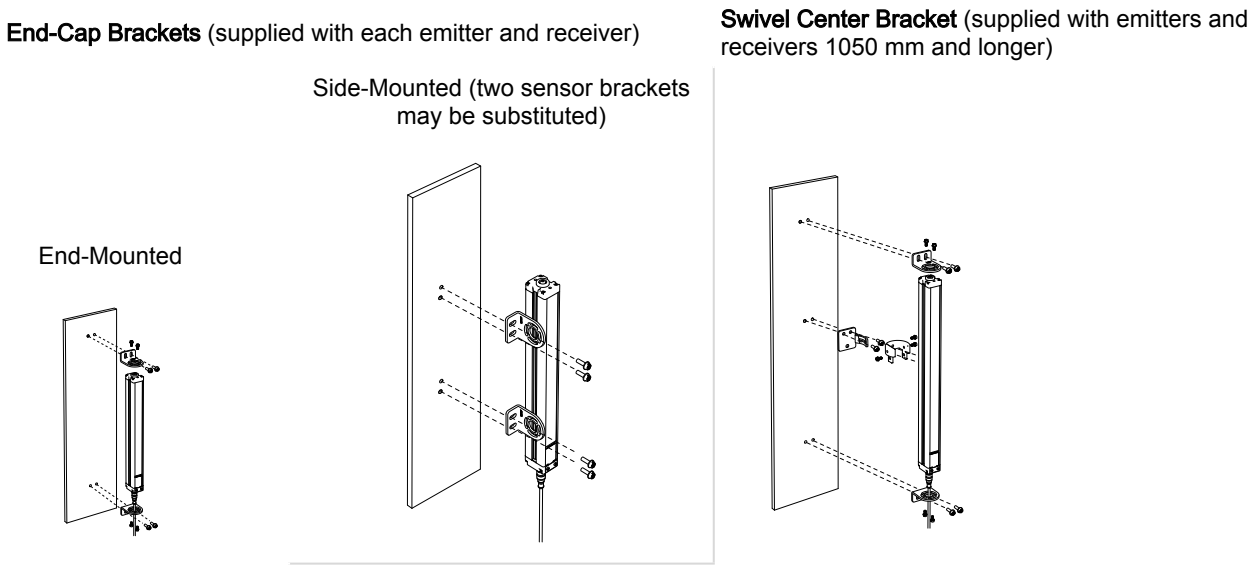

NOTE:
- EZ-SCREEN sensor brackets are designed to mount directly to MSA Series stands, using the hardware supplied with the stands (see "Appropriate Applications and Limitations" on page 11)
- See "Dimensions" on page 14 for mounting bracket dimensions

5.4 Sensor Mounting and Mechanical Alignment

Verify that:
- The emitter (light curtain) and receiver (light curtains) are directly opposite each other
- Nothing is interrupting the defined area
- The defined area is the same distance from a common reference plane for each sensor
- The emitter and receiver are in the same plane and are level/plumb and square to each other (vertical, horizontal, or inclined at the same angle, and not tilted front-to-back or side-to-side)

Figure 15. Incorrect Sensor Alignment



Angled or Horizontal Installations – verify that:
- Distance X at the emitter and receiver are equal

© Banner Engineering Corp. All rights reserved.
www.bannerengineering.com

- Distance Y at the emitter and receiver are equal
- Distance Z at the emitter and receiver are equal from parallel surfaces
- Vertical face (the window) is level/plumb
- Defined area is square. Check diagonal measurements if possible. See Vertical Installations.

Figure 16. For angled or horizontal installations

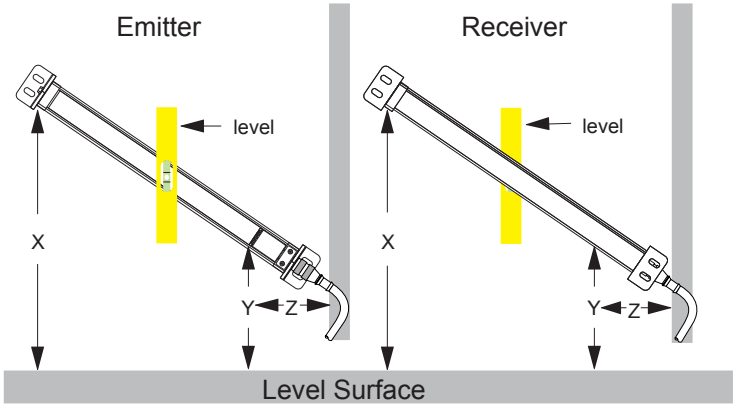

Vertical Installations – verify that:

- Distance X at the emitter and receiver are equal
- Both sensors are level/plumb (check both the side and face)
- Defined area is square. Check diagonal measurements if possible (Diagonal A = Diagonal B).

Figure 17. For vertical installations

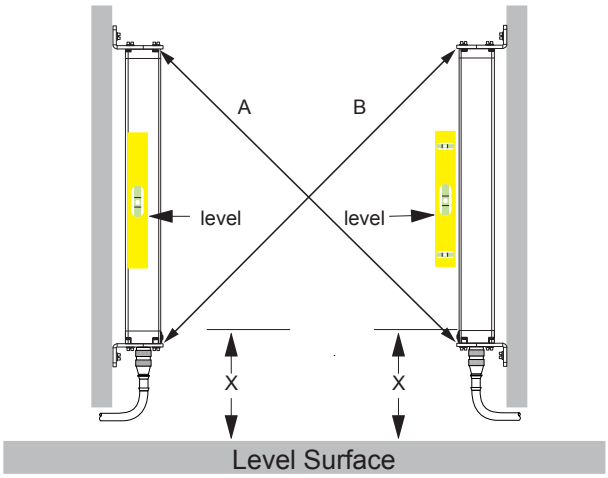

5.5 Mounting the Reset Switch

Mount the reset switch in a location that complies with the warning in "Reset Switch Location" on page 23. See "Initial Electrical Connections" on page 32 for electrical connection.

5.6 Routing Cordsets

Attach the required cordsets to the sensors, and route the sensor cables to the junction box, electrical panel, or other enclosure in which the interface module, the redundant mechanically linked interposing relays, FSDs, or other safety-related parts of the control system are located. This must be done per local wiring code for low-voltage dc control cables and may require installation of electrical conduit. See "Cordsets" on page 84 for selection of Banner supplied cables.

© Banner Engineering Corp. All rights reserved.
www.bannerengineering.com

EZ-SCREEN SLS is designed and manufactured to be highly resistant to electrical noise and to operate reliably in industrial settings. However, extreme electrical noise may cause a random Trip or Latch condition; in extreme cases, a Lockout is possible.

Emitter and receiver wiring is low voltage; routing the sensor wires alongside power wires, motor/servo wires, or other high voltage wiring may inject noise into the EZ-SCREEN SLS System. It is good wiring practice, and sometimes may be required by code, to isolate emitter and receiver cables from high-voltage wires, avoid routing cables close to “noisy” wiring, and provide a good connection to earth ground.

Sensor cabling and any interconnect wiring should have an insulation temperature rating of at least 90 °C (194 °F). In addition, QD cabling and any interconnect wires should meet the specifications in the following table:

Table 3. Maximum Machine Interface cable length versus total current draw (including both OSSD loads)

	0.5 A	0.75 A	1.0 A	1.25 A	1.5 A	1.75 A
18 AWG	114.3 m (375 ft)	76.2 m (250 ft)	57.3 m (188 ft)	45.1 m (148 ft)	38.1 m (125 ft)	33.2 m (109 ft)
20 AWG	73.1 m (240 ft)	48.8 m (160 ft)	36.6 m (120 ft)	30.0 m (95 ft)	24.4 m (80 ft)	21.3 m (70 ft)
22 AWG	45.7 m (150 ft)	30.5 m (100 ft)	22.9 m (75 ft)	18.0 m (59 ft)	15.2 m (50 ft)	13.4 m (44 ft)

NOTE: Maximum cable lengths are intended to ensure that adequate power is available to the EZ-SCREEN System when the supply is operating at +24 V DC – 15%.

5.7 Initial Electrical Connections

WARNING:
- **Risk of electric shock**
- Failure to follow these instructions could result in serious injury or death.
- Disconnect or turn off power before installing, removing, or servicing the device.
- Install and connect the device in accordance with the National Electrical Code (NEC) and any applicable local code requirements and supply the device with an appropriate fuse box or circuit breaker (see *Specifications*).

Lockout/tagout procedures may be required (refer to OSHA1910.147, ANSI Z244-1, ISO 14118, or the appropriate standard for controlling hazardous energy). Following relevant electrical standards and wiring codes, such as the NEC, NFPA79 or IEC60204-1, always connect the earth ground (green/yellow wire). **Do not operate the EZ-SCREEN SLS without an earth ground connection.**

Make the electrical connections in the order described in this section. Do not remove end-caps; no internal connections are to be made. All connections are made through the M12 quick-disconnects.

When installing QD cables, do not use tools to tighten the coupling nut—hand-tighten only. **Do not rotate the body of the QD, or damage to the connector can occur.**

Emitter Cordset

EZ-SCREEN SLS emitters have an 8-pin cordset, but not all conductors are used. The unused wires are in place to allow a parallel connection (color-for-color) to the receiver cable providing sensor interchangeability (or “swapability”); either sensor may be installed at either cordset connection. In addition to providing similar cabling, this wiring scheme is advantageous during installation, wiring, and troubleshooting.

Emitters with the optional TEST function (model number suffix Q5) use a 5-pin cable. Locate the black and the white wires at the cable end; if the Test input will be used, temporarily connect the ends of the wires to each other (but not to an external contact at this time). If the Test input will not be used, connect the emitter cable black and white wires together and properly terminate (for example, with the included wire-nut).

Receiver Cordset

Do not connect any wires to the machine control circuits (that is, OSSD outputs) at this time. For the initial power-up and checkout, normally open EDM must be configured. Locate the orange and orange/black wires (pins 2 and 3) and temporarily connect the ends of the wires to each other (but not to the machine at this time). Take precautions to prevent the wires from shorting to ground or to other sources of energy (for example, terminate with the included wire-nut). Final EDM wiring must be completed later.
If used, connect the external reset switch to the reset wire (violet) on the receiver cable and to 24 V DC (see "Wiring Diagrams" on page 44. See the warning in "Reset Switch Location" on page 23 about the physical location of the reset switch. The reset switch must be a normally open switch that is held closed for approximately 1/4 second, but no longer than 2 seconds, and then re-opened to accomplish the reset. The switch must be capable of switching 10 V DC to 30 V DC at 30 mA.

© Banner Engineering Corp. All rights reserved.
www.bannerengineering.com

5.7.1 Emitter Wiring Options

An EZ-SCREEN SLS emitter with an 8-pin connector can be connected either to its own power supply or to the receiver cable, color-for-color. The color-for-color connection allows the emitter and receiver positions to be interchanged without rewiring.

An EZ-SCREEN SLS emitter with a 5-pin connector and Test function is not capable of the color-for-color connection.

5.8 Initial Checkout Procedure

The initial checkout procedure must be performed by a Qualified Person. It must be performed only after configuring the System and after connecting the components.

Perform this procedure to:

- Ensure proper installation when the System is first installed
- Ensure proper System function whenever any maintenance or modification is performed on the System or on the machinery that is guarded by the System.

5.8.1 Configuring the System for Initial Checkout

Verify the Test input is jumpered (if used) and the System is set to the factory defaults for initial checkout and optical alignment. (Factory defaults are for Trip Output, 2-Channel EDM, Reduced Resolution OFF, and Scan Code 1.)

For the initial checkout, the EZ-SCREEN SLS System must be checked without power being available to the guarded machine. Final interface connections to the guarded machine cannot take place until the light screen system has been checked out. This may require lockout/tagout procedures (refer to OSHA1910.147, ANSI Z244-1, or the appropriate standard for controlling hazardous energy). These connections will be made after the initial checkout procedure has been successfully completed.

Verify:

- Power has been removed from (or is not available to) the guarded machine, its controls or actuators; and
- The machine control circuit or the Interface Module is not connected to the OSSD outputs at this time (permanent connections will be made later); and
- EDM is configured for No Monitoring (see "Machine Primary Control Elements (MPCE) and External Device Monitoring (EDM) Input" on page 41).

5.8.2 Initial Power-Up

1. Inspect the area near the light screen for reflective surfaces, including work pieces and the guarded machine. Reflective surfaces may cause light beams to reflect around a person in the light screen, preventing the person from being detected and not stopping the machine motion (see "Adjacent Reflective Surfaces" on page 25).
2. Eliminate the reflective surfaces as much possible by relocating, painting, masking, or roughening them. Remaining problem reflections will become apparent during the trip test.
3. Verify that power is removed from the EZ-SCREEN SLS System and from the guarded machine and that the OSSD safety outputs are not connected.
4. Remove all obstructions from the light screen.
5. Leaving power to the guarded machine off, make power and earth ground connections on both the emitter and receiver cables (see "Wiring Diagrams" on page 44).
6. Power up the EZ-SCREEN SLS System only.
7. Verify that the input power is present to both the emitter and the receiver. At least one indicator on both the emitter and the receiver should be on and the start-up sequence should cycle.
8. Watch both the emitter and the receiver Status indicators and the receiver Zone indicators to determine the light screen alignment status.
    - In a **lockout condition** (emitter or receiver), the Status indicator single-flashes red, and the receiver Zone and Reset indicators are off. Proceed to "Troubleshooting" on page 79 for diagnostic information.
    - In **normal operating mode** (emitter), the green Status indicator is on.
    - Test mode (5-pin emitters only): A flashing green System Status indicator (Test input open).
    - In **receiver latch condition, all optical beams clear** mode, the receiver red Status indicator is on and the amber Reset indicator is double-flashing; green Zone indicators are on. When the receiver is configured for Latch Output, the outputs are on only when all beams are clear and after a manual reset. If a reset routine can cause a Clear (Run) condition, optimize the alignment as described in the following section. If a Clear (Run) condition cannot be achieved, see “Blocked condition” below.

© Banner Engineering Corp. All rights reserved.
www.bannerengineering.com

- During a **clear (Run) condition** (receiver), the green Status indicator is on (or flashing green if reduced resolution is enabled), and the amber Reset indicator is on. All green Zone indicators are on. To optimize alignment and maximize excess gain, slightly loosen the sensor mounting screws (x4) and rotate one sensor left and right, noting the positions where the Status indicators turn red (Blocked condition); repeat with the other sensor (see "Optically Align the SLS Components" on page 34). Center each sensor between those two positions and tighten the end cap mounting screws, making sure to maintain the positioning as the screws are tightened. The sensor lenses must directly face each other. Proceed to "Perform a Trip Test" on page 37 after optimum optical alignment is verified.
- In a **blocked condition** (receiver), the red Status indicator is on, the amber Reset indicator is on, one or more red Zone indicator(s) are on, identifying the location of the blocked beams, and the number of blocked beams is displayed. Proceed to "Optically Align the SLS Components" on page 34.

NOTE: If beam 1 is blocked, Zone indicator 1 is red and all others are off. Beam 1 provides the synchronization signal.

NOTE: If the Test input is open, the 3-digit Diagnostic Display indicates the total number of beams in the system (minus one) and all Zone indicators are red.

5.8.3 Optically Align the SLS Components

WARNING:
- **Hazard exposure**
- Failure to follow these instructions could result in serious injury or death.
- Verify that no individuals are exposed to any hazard if the output signal switching device (OSSD) outputs turn on when the emitter and receiver become aligned.

1. Verify the sensor mounting (see "Mounting the Emitter and Receiver" on page 29).
2. Verify the optimal alignment, adjusting the sensor rotation with the power on.
   a. Verify that the emitter and the receiver are pointed squarely at each other. Use a straight edge (for example, a level) to determine the direction the sensor is facing. The sensor face must be perpendicular to the optical axis.

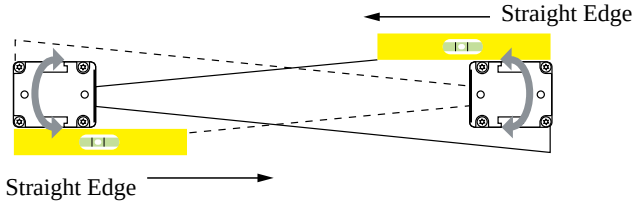

NOTE: At power-up, all indicators are tested (flash), then the Scan Code is displayed.

   b. Turn on the power to the emitter and the receiver. If Channel #1 beam is not aligned, the Status and Zone 1 indicators are red, and the Diagnostics Display indicates "CH1". Zone indicators 2–8 are off.

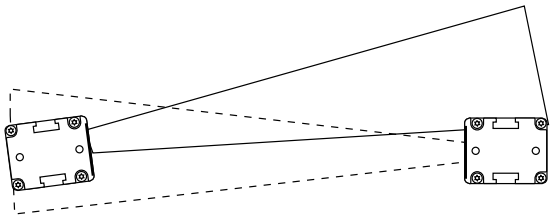

   c. If the green Status and amber Reset indicators are on, go to the next step. If not, rotate each sensor (one at a time) left and right until the green Status indicator is on. (As the sensor rotates out of alignment, the red Status

© Banner Engineering Corp. All rights reserved.
www.bannerengineering.com

indicator turns on). As more beams are aligned, the Zone indicators turns from red to green and the number of blocked beam indicators decreases.

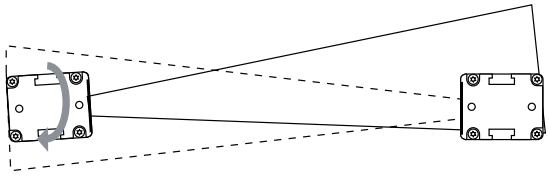

NOTE: If the emitter Test input is open, the 7-segment Display indicates the total number of beams in the system (minus one) and all Zone indicators are red (except for 10-beam systems, where the Zone 1 indicator is green).

d. To optimize the alignment, note the position where the red Status indicator turns on when the sensor is rotated both left and right. Center the sensor between the two positions, and tighten the end cap mounting screws, making sure the positioning does not drift as the screws are tightened. Repeat for the second sensor.

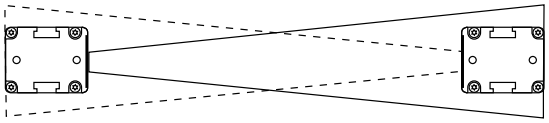

For situations where alignment is difficult, use a LAT-1-SS Laser Alignment Tool to assist or confirm alignment by providing a visible red dot along the sensor's optical axis.

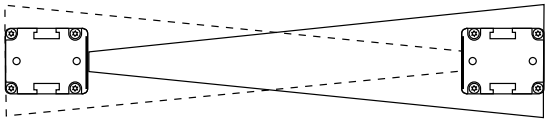

NOTE: If at any time the red Status indicator begins to flash, the System has entered a Lockout condition. See "Troubleshooting" on page 79 for more information.

5.8.4 Optical Alignment Procedure with Mirrors

EZ-SCREEN SLS sensors may be used with one or more corner mirrors for guarding more than one side of an area. The SSM rear-surface glass mirrors are rated at 85% efficiency. Thus, excess gain and sensing range are reduced when using mirrors; see "Use of Corner Mirrors" on page 27.

During any adjustments, allow only one individual to adjust any one item at any one time. In addition to the standard optical alignment procedure, verify:

1. The emitter, receiver, and all mirrors are level and plumb.
2. The middle of the defined area and the center point of the mirrors are approximately the same distance from a common reference point, such as the same height above a level floor.
3. There are equal amounts of mirror surface above and below the defined area such that the optical beams are not passing below or above the mirror.

NOTE: An LAT-1 Laser Alignment Tool is very helpful by providing a visible red dot along the optical axis. See "Alignment Aids" on page 93, "Figure: Optical alignment using the LAT-1 on page 36, and Banner Safety Applications Note SA104 (p/n 57477) for more information.

© Banner Engineering Corp. All rights reserved.
www.bannerengineering.com

Figure 18. Optical alignment using the LAT-1

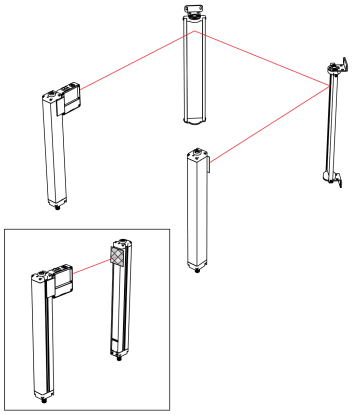

Figure 19. Corner Mirror Alignment

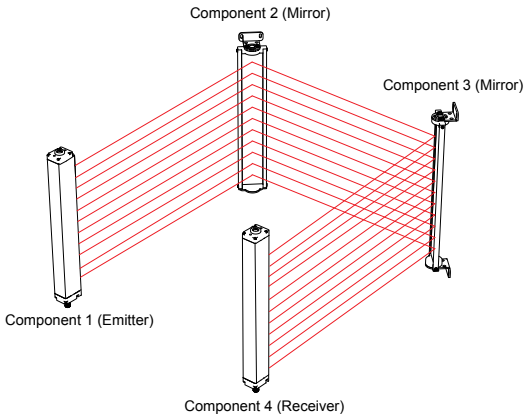

5.8.5 Reduced Resolution/Floating Blanking

Reduced resolution/floating blanking increases the minimum diameter of an object that the light screen can reliably detect anywhere within its defined area. Reduced resolution is generally used to allow one or more objects (usually workpiece materials) to move anywhere through the defined area, without tripping the OSSD safety outputs.

Enabling two-beam reduced resolution reduces the overall minimum object sensitivity, which allows multiple objects to move through the defined area. The effect is that any two consecutive beams (except for the sync beam) can be blocked, without causing the OSSDs to turn OFF. This is also called “Multiple-Point Floating Blanking.”

Multiple “holes” are created in which 14 mm systems detect a 30 mm object and ignore an 8.5 mm object. Similarly, 30 mm systems detect a 60 mm object and ignore a 17 mm object. See the DIP-switch configuration. During operation, the Status indicator flashes green when reduced resolution is enabled.

In reduced resolution applications, the separation distance always increases because of the larger depth penetration factor (Dpf). In either case, calculate the separation distance (see "Calculating the Safety Distance (Minimum Distance)" on page 20.

Model	Reduced Resolution Setting	Maximum Size of Undetected Objects	Resulting Resolution
14 mm Resolution	Off	(Not applicable)	14 mm (0.55 in)
	On (2-beam)	8.5 mm (0.34 in)	30 mm (1.18 in)
30 mm Resolution	Off	(Not applicable)	30 mm (1.18 in)
	On (2-beam)	17 mm (0.67 in)	60 mm (2.36 in)

WARNING:

- **Use reduced resolution and fixed blanking only when necessary**
- Failure to follow these instructions could result in serious injury or death.
- Completely fill any holes created in the sensing field with the blanked object or increase the safety (minimum) distance to account for the larger resolution.

5.8.6 Fixed Blanking

Fixed blanking allows for a stationary object(s), such as tooling, to be ignored while it remains positioned within the defined area. A flashing green Zone indicator denotes the location of a blanked area. If the object is moved or removed, the System enters lockout mode so that an unexpected hole in the sensing field is not created.

One or multiple areas within an EZ-SCREEN SLS sensor pair may be blanked out. The minimum number of beams between two blanked areas is one. Any beam other than the sync beam may be blanked. All beams of a fixed blanked area must stay blocked at all times (after the fixed blanking configuration mode has been exited), for the output signal switching device to stay ON.

© Banner Engineering Corp. All rights reserved.
www.bannerengineering.com

Configure Fixed Blanking

To configure fixed blanking, follow these steps.

1. From normal operation or a power off condition, move the second and third DIP switches (the first RR and T/L) both to the left (T and RR position).

   NOTE: The fixed blanking process has a time limit of 10 minutes. If this time is exceeded, a lockout occurs and the process must be started over.

2. Move the fourth and fifth DIP switches (the second RR and T/L) both to the right (L and OFF position). The first and sixth DIP switches are not part of this process. Do not move them to match this image.



3. The receiver should now either be in a lockout condition or power is still off.
   - If power is off: Apply power
   - If the system is in a lockout condition: Perform a valid reset sequence (close the reset switch for 0.25 to 2 seconds, then reopen the switch).

   A fixed blanking configuration is indicated by:
   - Display alternates between “PFA” and the number of blocked beams (“0” if all beams are clear). (PFA = Program Fixed Blanking Active)
   - Zone indicators are active
   - Amber/yellow Reset indicator is off
   - Red Status indicator is on
4. Position the object(s) to be blanked.

   When the beams are blocked, the 7-segment display alternates between “PFA” and the number of blocked beams. The zone indicators remain active and denote the location of blocked beams.
5. To teach the blanked beams, re-configure DIP switches for normal operation. Verify that only the objects to be blanked are interrupting the defined area. A lockout occurs if an object is moved or removed after teaching.

   The receiver indicates:
   - Display: PFC on (PFC = Program Fixed Blanking Complete)
   - Zone indicators flash the approximate location of fixed blanked area programmed
   - Reset indicator single-flashing amber/yellow
   - Status indicator single-flashing red
6. Perform a valid reset sequence or cycle the power.
7. **To disable fixed blanking**, follow this same procedure, but remove all objects not to be blanked at step 4.

5.8.7 Perform a Trip Test

After optimizing the optical alignment, perform the trip test to verify the detection capability of the EZ-SCREEN SLS System. This test will also verify correct sensor orientation and identify optical short circuits. After the installation has passed the trip test, the safety outputs may be connected and the commissioning checkout may be performed (initial installations only).

NOTE: To test a **cascaded system**, each light screen must be tested individually, while monitoring the status indicator on the first receiver in the cascade.

© Banner Engineering Corp. All rights reserved.
www.bannerengineering.com

Table 4. Appropriate Test Pieces for the Trip Test

Reduced Resolution	14 mm Resolution Models	30 mm Resolution Models
OFF	14 mm (0.55 in) dia. Model STP-13	30 mm (1.18 in) dia. Model STP-14
ON (2-beam)	30 mm (1.18 in) dia. Model STP-14	60 mm (2.36 in) dia. Model STP-15

1. Select the proper test piece, ordered separately.
2. Verify that the System is in Run mode, the green Status indicator is on, all Zone indicators are green, and the amber Status indicator is on.
3. Pass the test piece through the defined area in three paths: near the emitter, near the receiver, and midway between the emitter and receiver.

   Figure 20. Trip Test

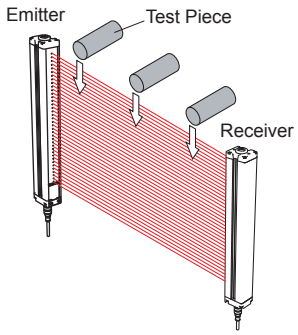

4. During each pass, while the test piece is interrupting the defined area, at least one Zone indicator **must be red. The red Zone indicator must change with the position of the test piece within the defined area.**
   - Trip Output Operation: The Status indicator must turn red and remain red for as long as the test piece remains in the defined area. If not, the installation has failed the trip test.
   - Latch Output Operation: The Status indicator must turn red and remain red. The amber Reset indicator must remain on. If the Reset indicator begins to flash at any time while the test piece is interrupting the defined area, the installation has failed the trip test.

   If all Zone indicators turn green or fail to follow the position of the test piece while it is within the defined area, the installation has failed the trip test. Check for correct sensor orientation, reflective surfaces, and unguarded areas created due to the use of blanking. Do not continue until the situation is corrected. When the test piece is removed from the defined area, in trip output operation, the Status indicator must be green (or flash green if reduced resolution is enabled.) In Latch Output Operation, the Status indicator remains red until a manual reset is performed (the amber Reset indicator flashes).

WARNING:
- **Trip test failure**
- Using a system that has failed a trip test can result in serious bodily injury or death. If the trip test has failed, the system might not stop dangerous machine motion when a person or object enters the sensing field.
- Do not attempt to use the system if the system does not respond properly to the trip test.

5. If mirrors are used in the application: Test the defined area on each leg of the sensing path (for example, emitter to mirror, between mirror and receiver.

© Banner Engineering Corp. All rights reserved.
www.bannerengineering.com

Figure 21. Trip Test with Corner Mirror

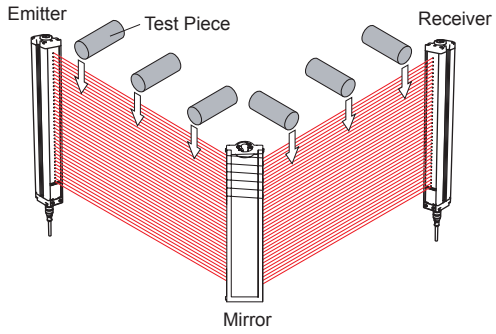

6. If the EZ-SCREEN SLS System passes all checks during the trip test, go on to "Electrical Connections to the Guarded Machine" on page 39.

5.9 Electrical Connections to the Guarded Machine

Verify that power has been removed from the EZ-SCREEN SLS and the guarded machine. Make the permanent electrical connections as described in "Output Signal Switching Device (OSSD) Output Connections" on page 39 and "Final Switching Devices (FSD) Interfacing Connections" on page 40 as required by each individual application.

Lockout/tagout procedures may be required (refer to OSHA 1910.147, ANSI Z244-1, ISO 14118, or the appropriate standard for controlling hazardous energy). Follow relevant electrical standards and wiring codes, such as the NEC, NFPA79 or IEC 60204-1.

Supply power and external device monitoring (EDM) should already be connected. The EZ-SCREEN SLS must also have been aligned and passed the Initial Checkout, as described in "Initial Checkout Procedure" on page 33.

The final connections to be made or verified are:

- OSSD outputs (see "Output Signal Switching Device (OSSD) Output Connections" on page 39)
- FSD interfacing (see "Final Switching Devices (FSD) Interfacing Connections" on page 40)
- MPCE/EDM (see "Machine Primary Control Elements (MPCE) and External Device Monitoring (EDM) Input" on page 41)
- Remote Test

WARNING:
- **Risk of electric shock**
- Use extreme caution to avoid electrical shock. Serious injury or death could result.
- Always disconnect power from the safety system (for example, device, module, interfacing, etc.), guarded machine, and/or the machine being controlled before making any connections or replacing any component. Lockout/tagout procedures might be required. Refer to OSHA 29CFR1910.147, ANSI Z244-1, or the applicable standard for controlling hazardous energy.
- Make no more connections to the device or system than are described in this manual. Electrical installation and wiring must be made by a Qualified Person[2] and must comply with the applicable electrical standards and wiring codes, such as the NEC (National Electrical Code), NFPA 79, or IEC 60204-1, and all applicable local standards and codes.

5.9.1 Output Signal Switching Device (OSSD) Output Connections

Both the output signal switching device (OSSD) outputs must be connected to the machine control so that the machine's safety-related control system interrupts the circuit or power to the machine primary control element(s) (MPCE), resulting in a non-hazardous condition.

The final switching device(s) (FSDs) typically accomplish this when the OSSDs go to an OFF state.

[2] A person who, by possession of a recognized degree or certificate of professional training, or who, by extensive knowledge, training and experience, has successfully demonstrated the ability to solve problems relating to the subject matter and work.

© Banner Engineering Corp. All rights reserved.
www.bannerengineering.com

Refer to the output specifications in "Specifications" on page 12 and these warnings before making OSSD output connections and interfacing the EZ-SCREEN SLS to the machine.

WARNING:
- **Interfacing both output signal switching devices (OSSD)**
- Failure to follow these instructions could result in serious injury or death.
- Unless the same degree of safety is maintained, never wire an intermediate device(s) (PLC, PES, PC) between the safety module outputs and the master stop control element it switches such that a failure causes a loss of the safety stop command or the failure allows the safety function to be suspended, overridden, or defeated.
- Connect both OSSD outputs to the machine control so that the machine's safety-related control system interrupts the circuit to the machine primary control element(s), resulting in a non-hazardous condition.

WARNING:
- **OSSD Interfacing**
- Failure to properly interface the OSSD Outputs to the guarded machine could result in serious injury or death.
- To ensure proper operation, the Banner device output parameters and machine input parameters must be considered when interfacing the Banner device OSSD outputs to machine inputs. Design machine control circuitry so that all of the following are true:

  The maximum load resistance value is not exceeded.
  The maximum specified OSSD OFF-state voltage does not result in an ON condition.

5.9.2 Final Switching Devices (FSD) Interfacing Connections

The final switching device(s) (FSDs) take many forms. The most common are forced-guided devices, mechanically linked relays, or interface modules. The mechanical linkage between the contacts allows the device to be monitored by the external device monitoring (EDM) circuit for certain failures.

Depending on the application, the use of FSDs can facilitate controlling voltage and current that differs from the output signal switching device (OSSD) outputs of the EZ-SCREEN SLS. FSDs can also be used to control an additional number of hazards by creating multiple safety stop circuits.

Protective Stop (Safety Stop) Circuits

A protective stop (safety stop) allows for an orderly cessation of motion for safeguarding purposes, which results in a stop of motion and removal of power from the MPCEs (assuming this does not create additional hazards).

A protective stop circuit typically comprises a minimum of two normally open contacts from forced-guided, mechanically linked relays, which are monitored through external device monitoring (EDM) to detect certain failures to prevent the loss of the safety function. Such a circuit can be described as a "safe switching point". Typically, protective stop circuits are either single-channel, which is a series connection of at least two normally open contacts; or dual-channel, which is a separate connection of two normally open contacts. In either method, the safety function relies on the use of redundant contacts to control a single hazard. If one contact fails On, the second contact arrests the hazards and prevents the next cycle from occurring. See "Generic Wiring - Receiver to FSD" on page 48.

The interfacing of the protective stop circuits must be accomplished so that the safety function cannot be suspended, overridden, or defeated unless accomplished in a manner of the same or greater degree of safety as the machine's safety-related control system that includes the EZ-SCREEN SLS.

The normally open safety outputs from an interface module provide a series connection of redundant contacts that form protective stop circuits for use in either single-channel or dual-channel control. See "Generic Wiring - Receiver to FSD" on page 48.

Dual-Channel Control

Dual-channel control provides the ability to electrically extend the safe switching point beyond the FSD contacts.

With proper monitoring, this method of interfacing is capable of detecting certain failures in the control wiring between the safety stop circuit and the MPCEs. These failures include a short-circuit of one channel to a secondary source of energy or voltage, or a loss of the switching ability of one of the FSD outputs. Such failures may lead to a loss of redundancy, or to a complete loss of safety, if not detected and corrected.

© Banner Engineering Corp. All rights reserved.
www.bannerengineering.com

The possibility of a failure to the wiring increases as the physical distance between the FSD safety stop circuits and the MPCEs increases, as the length or the routing of the interconnecting wires increases, or if the FSD safety stop circuits and the MPCEs are located in different enclosures. For this reason, dual-channel control with external device monitoring (EDM) should be used in any installation where the final switching device(s) (FSDs) are located remotely from the machine primary control element(s) (MPCEs).

Single-Channel Control

Single-channel control uses a series connection of final switching device contacts to form a safe switching point.

After this point in the machine's safety-related control system, failures can occur that would result in a loss of the safety function (such as a short-circuit to a secondary source of energy or voltage). For this reason, single-channel control interfacing should be used only in installations where final switching device (FSD) safety stop circuits and the machine primary control element(s) (MPCEs) are mounted within the same control panel, adjacent to each other, and are directly connected to each other; or where the possibility of such a failure can be excluded. If this cannot be achieved, then dual-channel control should be used.

Methods to exclude the possibility of these failures include, but are not limited to:

- Physically separating interconnecting control wires from each other and from secondary sources of power
- Routing interconnecting control wires in separate conduit, runs, or channels
- Locating all elements (modules, switches, and devices under control) within one control panel, adjacent to each other, and directly connected with short wires
- Properly installing multi-conductor cabling and multiple wires through strain relief fittings. Over-tightening of a strain-relief device can cause short circuits at that point.
- Using positive-opening or direct-drive components, installed and mounted in a positive mode

5.9.3 Machine Primary Control Elements (MPCE) and External Device Monitoring (EDM) Input

A machine primary control element (MPCE) is an electrically powered element that directly controls the normal operation of a machine in such a way that it is the last element (in time) to function when machine operation is to be initiated or arrested (per IEC 61496-1). Examples include motor contactors, clutch/brakes, valves, and solenoids.

Depending on the level of risk of harm, it may be required to provide redundant MPCEs or other control devices that are capable of immediately stopping the dangerous machine motion, irrespective of the state of the other. These two channels of machine control need not be identical (i.e., diverse redundant), but the stop time performance of the machine (Ts, used to calculate the separation distance, see "Calculating the Safety Distance (Minimum Distance)" on page 20) must take into account the slower of the two channels. Refer to "Wiring Diagrams" on page 44 or consult the machine manufacturer for additional information.

To ensure an accumulation of failures does not compromise the redundant control scheme (cause a failure to danger), a method to verify the normal functioning of MPCEs or other control devices is required. EZ-SCREEN SLS provides a convenient method for this verification: external device monitoring (EDM).

For the EZ-SCREEN SLS external device monitoring to function properly, each device must include a normally closed, forced-guided (mechanically linked) contact that can accurately reflect the status of the device. This ensures that the normally open contacts, used for controlling hazardous motion, have a positive relationship with the normally closed monitoring contacts and can detect a failure to danger (for example, contacts that are welded closed or stuck On).

It is strongly recommended that a normally closed, forced-guided monitoring contact of each final switching device (FSD) and MPCE be connected to the EDM input (see "Wiring Diagrams" on page 44). If this is done, proper operation will be verified. Monitoring FSD and MPCE contacts is one method of maintaining control reliability (OSHA/ANSI) and Category 3 and 4 (ISO 13849-1).

If monitoring contacts are not available or do not meet the design requirement of being forced-guided (mechanically linked), it is recommended that you:

- Replace the devices so that they are capable of being monitored; or
- Incorporate the EDM function into the circuit as close to the MPCE as possible (for example, monitor the FSDs); and
- Employ the use of well-tried, tested, and robust components, and generally accepted safety principles, including fault exclusion, into the design and installation to either eliminate or reduce to an acceptable (minimal) level of risk, the possibility of undetected faults or failures that can result in the loss of the safety function.

The principle of fault exclusion allows the designer to design out the possibility of various failures and justify it through the risk assessment process to meet the required level of safety performance, such as the requirements of Category 2, 3, or 4. See ISO 13849-1/-2 for further information.

© Banner Engineering Corp. All rights reserved.
www.bannerengineering.com

WARNING:
- **External Device Monitoring (EDM)**
- Creating a hazardous situation could result in serious injury or death.
- If the system is configured for “no monitoring,” it is the user’s responsibility to ensure this does not create a hazardous situation.

External Device Monitoring

EZ-SCREEN provides three possible external device monitoring (EDM) configurations: single-channel (1-channel) monitoring, dual-channel (2-channel) monitoring, and no monitoring. Their functions are described below.

The most common form of EDM is single-channel monitoring; its primary advantages are simplicity of wiring and the ability to use the Auxiliary output. The installation must prevent short circuits across the N.C. monitoring contacts and to secondary sources of power.

Dual-channel monitoring has the ability to detect additional failures, such as short circuits, and should be used when those failures can not be designed out or reasonably be excluded. Dual-channel monitoring is also the default setting and has the advantage of additional diagnostic capability that can identify which specific element has slowed or failed.

External Device Monitoring Wiring

If not connected previously, it is again strongly recommended that one normally closed, forced-guided monitoring contact of each FSD and MPCE be wired as shown in the monitoring circuit (see "Wiring Diagrams" on page 44. Pins 2 and 3 of the receiver connector provide connection for the external device monitoring input. External device monitoring (EDM) must be wired in one of three configurations described below and this wiring configuration must agree with the receiver’s EDM DIP switch settings (see "System Configuration Settings" on page 49).

One-Channel Monitoring: This is a series connection of closed monitor contacts that are forced-guided (mechanically linked) from each device controlled by the EZ-SCREEN SLS. The monitor contacts must be closed before the EZ-SCREEN SLS can be reset and the OSSDs can turn ON. After a reset is executed and the safety outputs (OSSDs) turn ON, the status of the monitor contacts are no longer monitored and may change state. However, the monitor contacts must be closed within 250 milliseconds of the OSSD outputs going from ON to OFF. Refer to "Wiring Diagrams" on page 44. Connect the monitor contacts between +24 V DC and EDM (orange wire, pin 9).

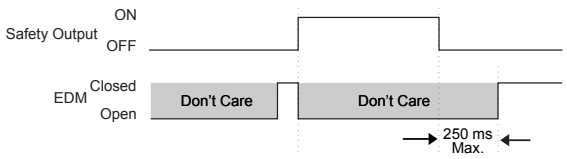

For EZ-SCREEN SLS receivers with a date code prior to 0834, the monitoring contacts must open within 200 milliseconds of the OSSD outputs turning ON (a clear condition) and must close within 200 milliseconds of the OSSD outputs turning OFF (a blocked condition) or a lockout will occur.

Two-Channel Monitoring: This is an independent connection of closed monitor contacts that are forced-guided (mechanically linked) from each device controlled by the EZ-SCREEN. The monitor contacts must be closed before the EZ-SCREEN can be reset and the OSSDs can turn ON. Regardless of the state of the OSSDs, the monitor contacts may change state (either both open, or both closed). If the monitor contacts remain in opposite states for more than 250 milliseconds, a lockout occurs.

Figure 22. 2-Channel EDM Wiring

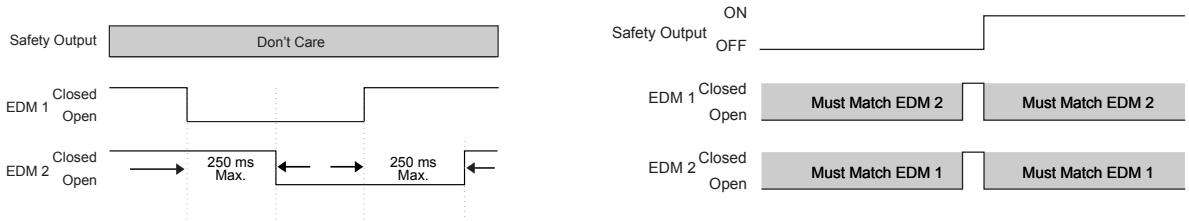

© Banner Engineering Corp. All rights reserved.
www.bannerengineering.com

Refer to the figures above for 2-channel EDM wiring. Connect the monitor contacts as shown between +24 V DC and EDM1 (pin 3) and between +24 V DC and EDM2 (pin 2).

For EZ-SCREEN receivers with a date code prior to 0834, the monitoring contacts must always close within 200 milliseconds of the corresponding OSSD state change (turning OFF) or a lockout will occur.

No Monitoring: Use this configuration to perform the initial checkout; see "Initial Checkout Procedure" on page 33. *If the application does not require the EDM function, it is the user's responsibility to ensure that this configuration does not create a hazardous situation.* To configure the System for No monitoring, jumper EDM1 (orange wire, pin 3) to EDM2 (orange/black wire, pin 2).

Refer to "Wiring Diagrams" on page 44 for “no monitoring” wiring. Set the configuration DIP switch to E2, per "System Configuration Settings" on page 49.

An alternate method to configure no monitoring is to set the configuration DIP switch to E1 (1-channel monitoring), per "System Configuration Settings" on page 49, and connect EDM1 (orange wire, pin 3) to +24 V DC. This method allows the ability to use the auxiliary output (see "Auxiliary (Aux.) Output" on page 43) in applications that do not require the EDM function.

5.10 Auxiliary (Aux.) Output

An aux. output function is available when the receiver is configured for 1-channel EDM (for receivers with date code 0834 or newer). This current sourcing (PNP) solid-state output (75 mA maximum) is used for control functions that are not safety-related. A typical use is to signal the state of the OSSDs to a programmable logic controller (PLC). The aux. output follows the state of the OSSDs. Pin 2 (orange/black) supplies the connection; see "Wiring Diagrams" on page 44.

To use the auxiliary output in an application configured for no monitoring:

1. Set the configuration DIP switch to E1 (1-channel monitoring) per "System Configuration Settings" on page 49.
2. Connect EDM1 (pin 3) to +24 V DC (see "Machine Primary Control Elements (MPCE) and External Device Monitoring (EDM) Input" on page 41).

There are no compatibility issues retrofitting receivers with aux output into earlier installations, if precautions are taken to prevent EDM2 (pin 2, orange/black wire) from shorting to ground or another source of energy.

5.11 Remote Test Input

The 5-pin EZ-SCREEN SLS emitter models (model numbers SLSE..-..Q5) provide a Test function. A pair of wires is connected from the emitter to an external switch, typically a normally open contact, held closed. Opening the switch “turns off” the emitter, simulating an interruption of one or more light beams; all OSSD outputs will turn OFF.

This remote test input function may be useful for EZ-SCREEN SLS setup and to verify machine control circuit operation. See "Specifications" on page 12, "Electrical Connections to the Guarded Machine" on page 39, and "Sensor "Swapability"" on page 43 for more information.

5.12 Preparing for System Operation

After the initial trip test has been accomplished, and the OSSD safety outputs and EDM connections have been made to the machine to be controlled, the EZ-SCREEN SLS is ready for testing in combination with the guarded machine.

The operation of the EZ-SCREEN SLS with the guarded machine must be verified before the combined System and machine may be put into service. To do this, a Qualified Person must perform the Commissioning Checkout Procedure (see "Commissioning Checkout" on page 60).

5.13 Sensor "Swapability"

This wiring option provides sensor interchangeability (or “swapability”)—the ability to install either sensor at either QD connection.

To wire the emitter, use only three conductors (Brown = +24 V DC, Blue = 0 V DC, and Green/Yellow = GND). Connect the remaining wires in a parallel connection (color-for-color) to the receiver cable. The resulting installation provides the ability to

© Banner Engineering Corp. All rights reserved.
www.bannerengineering.com

swap the emitter and receiver position. This wiring option provides advantages during installation, wiring, and troubleshooting.

Figure 23. 8-pin connectors (optional wiring)

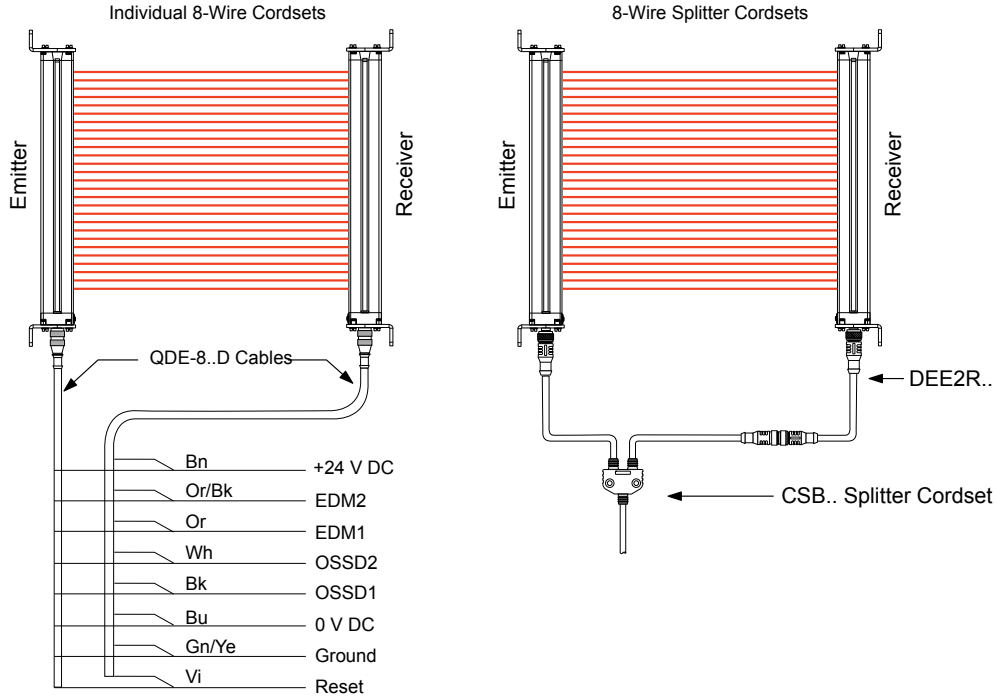

Model CSB.. splitter cordsets and DEE2R.. double-ended cables allow easy interconnection between an EZ-SCREEN receiver and emitter, providing a single trunk cable for the optional "swapable" wiring (see "Routing Cordsets" on page 31).

5.14 Wiring Diagrams

5.14.1 Generic Wiring - Emitter

Figure 24. Emitter (Standard)—Generic Wiring

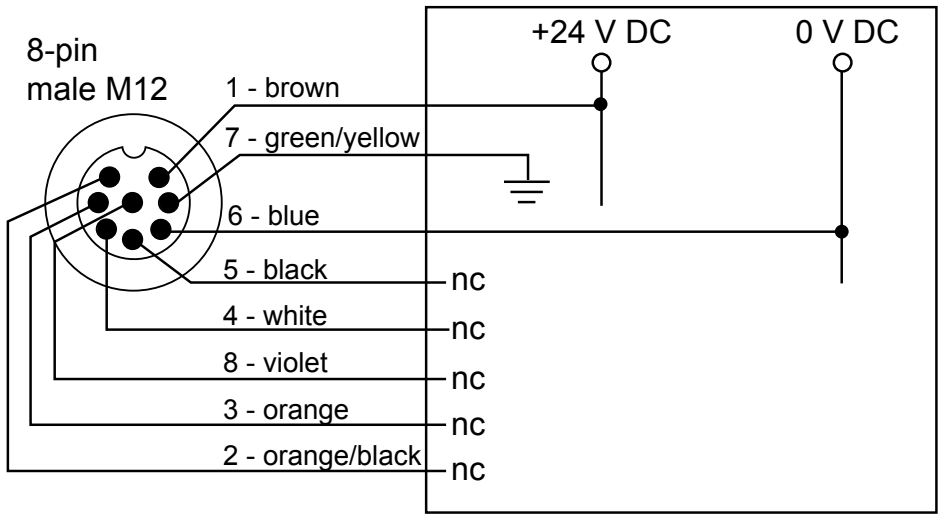

Pins 2, 3, 4, 5, and 8 are not connected or are connected in parallel to the same color wire from the receiver cable.

© Banner Engineering Corp. All rights reserved.
www.bannerengineering.com

Figure 25. Emitter (with Test)—Generic Wiring

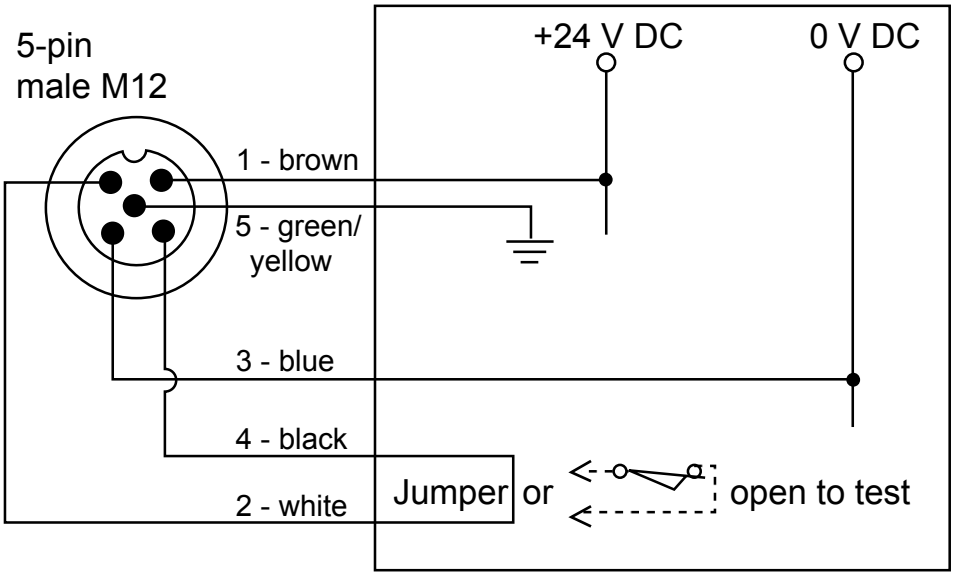

5.14.2 Generic Wiring - Receiver to Safety Controller

Figure 26. Self-checking Safety Module, Safety Controller, Safety PLC (no monitoring, no reset)—Generic Receiver Wiring

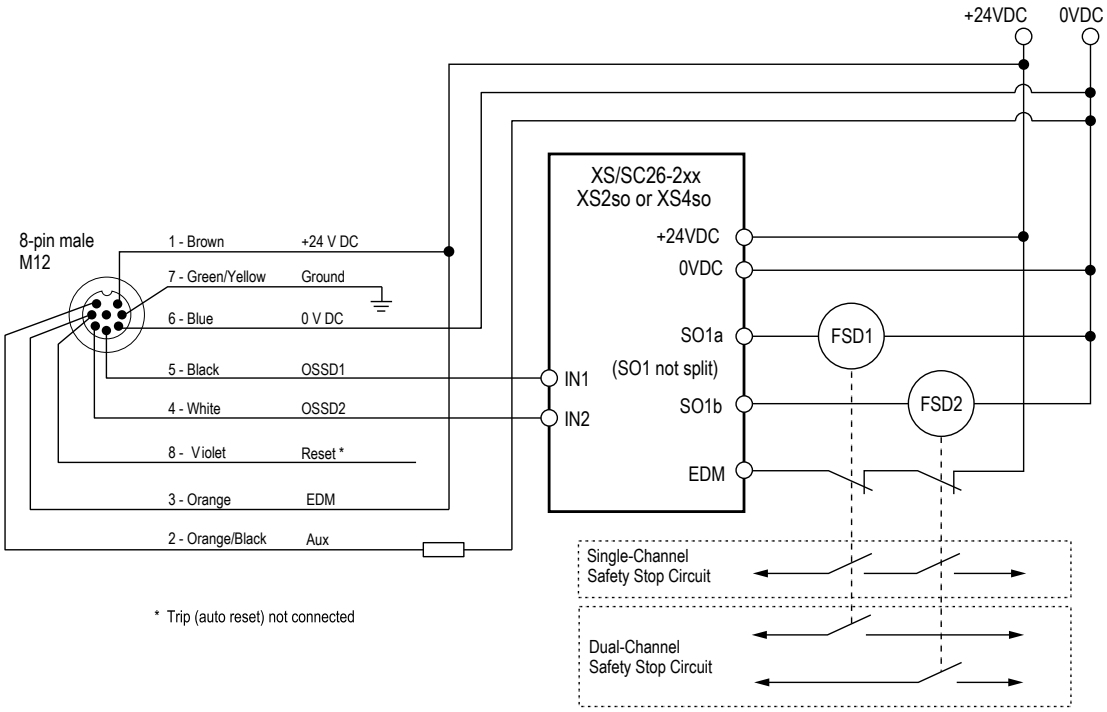

DEE8-..D Adapter Cordsets can be used similarly to the QDE-8..D.

EZ-SCREEN receiver DIP switches are configured for “Trip” (T) output and 1-channel EDM (E1). If the Auxiliary output is not desired, configure the EZ-SCREEN receiver for 2-channel EDM (E2) and connect pin #3 (Or) to pin #2 (or/bk).

© Banner Engineering Corp. All rights reserved.
www.bannerengineering.com

WARNING:

- **Properly install arc or transient suppressors**
- Failure to follow these instructions could result in serious injury or death.
- Install any suppressors as shown across the coils of the machine primary control elements. Do not install suppressors directly across the output contacts of the safety or interface module. In such a configuration, it is possible for suppressors to fail as a short circuit.

5.14.3 Generic Wiring - Receiver to Interface Modules

Figure 27. Interface Module (2-channel EDM, with reset)—Generic Receiver Wiring

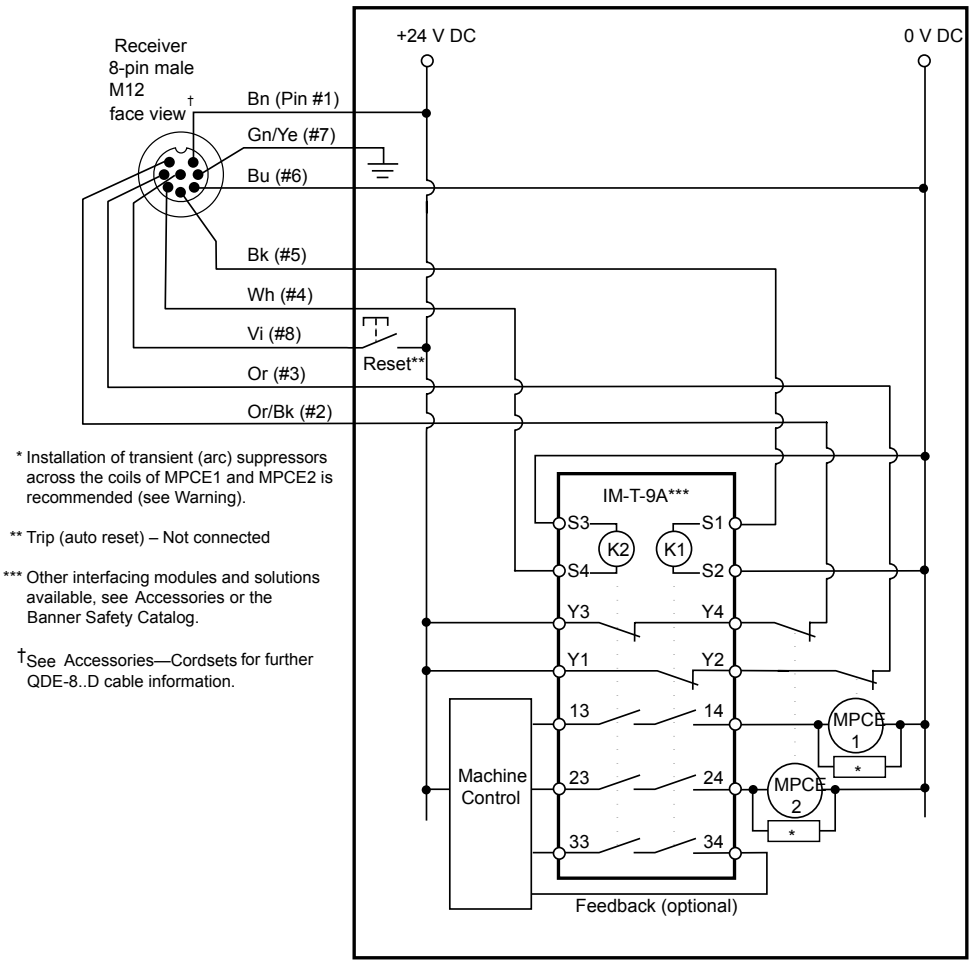

© Banner Engineering Corp. All rights reserved.
www.bannerengineering.com

Figure 28. Interface Module (1-channel EDM, with reset)—Generic Receiver Wiring

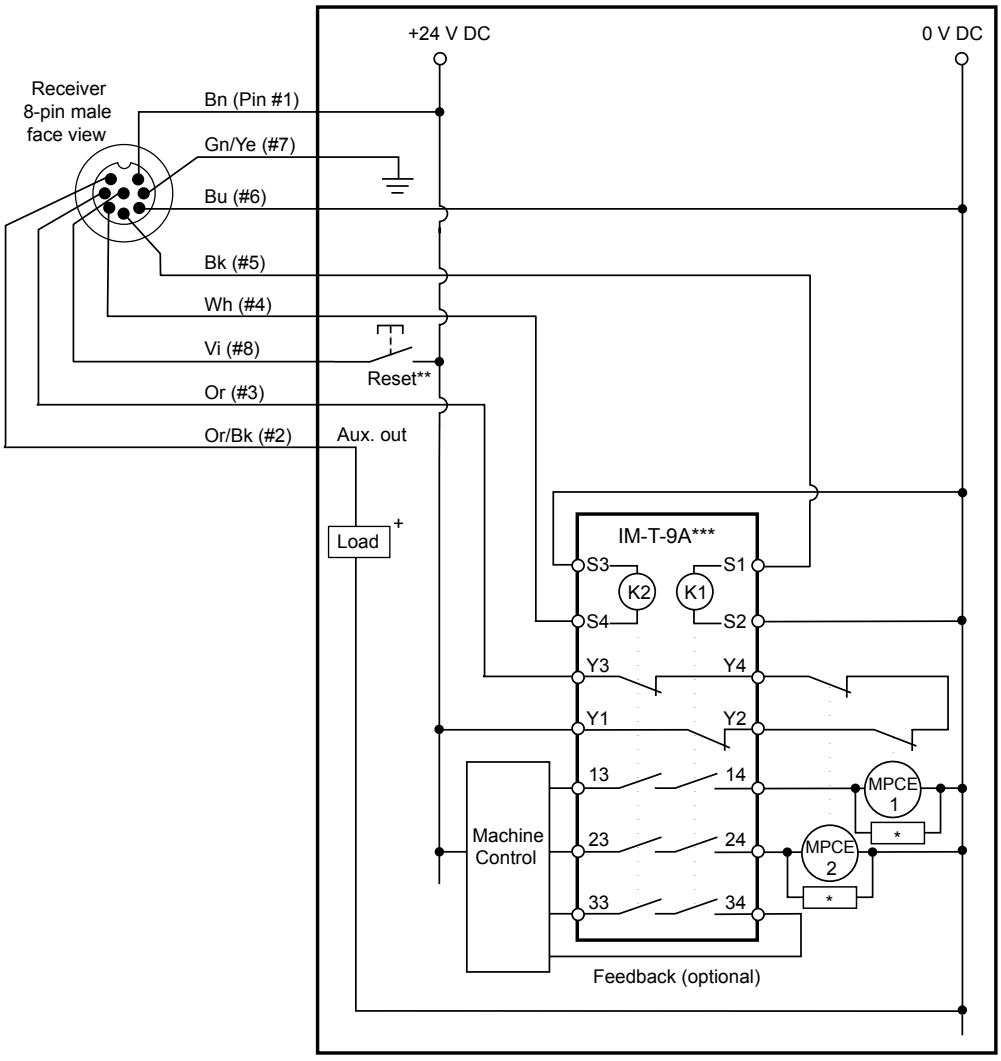

Set the EZ-SCREEN receiver DIP switch E1/E2 to E1 for single-channel EDM.

* Installation of transient (arc) suppressors across the coils of MPCE1 and MPCE2 is recommended.

** Trip (auto reset) — Not connected

*** Other interfacing modules and solutions are available.

† See "Cordsets" on page 84 for more QDE-8D cordset information.

WARNING:

- **Properly install arc or transient suppressors**
- Failure to follow these instructions could result in serious injury or death.
- Install any suppressors as shown across the coils of the machine primary control elements. Do not install suppressors directly across the output contacts of the safety or interface module. In such a configuration, it is possible for suppressors to fail as a short circuit.

© Banner Engineering Corp. All rights reserved.
www.bannerengineering.com

5.14.4 Generic Wiring - Receiver to FSD

Figure 29. FSDs (2-channel EDM, with reset)—Generic Receiver Wiring

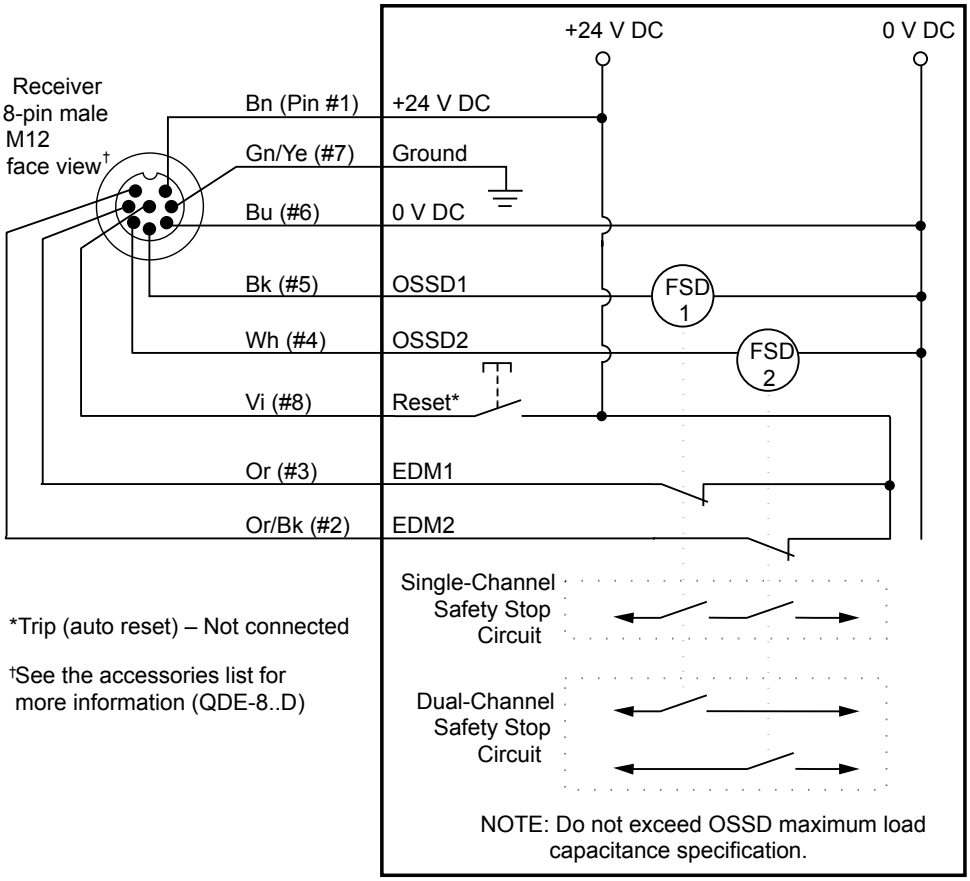

© Banner Engineering Corp. All rights reserved.
www.bannerengineering.com

Chapter Contents

6.1 Security Protocol 49
6.2 System Configuration Settings 49
6.3 Reset Procedures 51
6.4 Status Indicators 52
6.5 Normal Operation 58
6.6 Periodic Checkout Requirements 59

Chapter 6 Operating Instructions

6.1 Security Protocol

Certain procedures for installing, maintaining, and operating the EZ-SCREEN SLS must be performed by either Designated Persons or Qualified Persons.

A **Designated Person** is identified and designated in writing, by the employer, as being appropriately trained and qualified to perform system resets and the specified checkout procedures on the EZ-SCREEN SLS. The Designated Person is empowered to:

- Perform manual resets and hold possession of the reset key (see "Reset Procedures" on page 51)
- Perform the Daily Checkout Procedure

A **Qualified Person**, by possession of a recognized degree or certificate of professional training, or by extensive knowledge, training, and experience, has successfully demonstrated the ability to solve problems relating to the installation of the EZ-SCREEN SLS System and its integration with the guarded machine. In addition to everything for which the Designated Person is empowered, the Qualified Person is empowered to:

- Install the EZ-SCREEN SLS System
- Perform all checkout procedures
- Make changes to the internal configuration settings
- Reset the System following a lockout condition

6.2 System Configuration Settings

Set the System settings using the configuration panels located on each sensor, behind the access cover. The access cover is opened by first removing the factory-installed security plate with the security hex wrench provided. Re-install the security plate after any configuration changes.

SC1 or SC2—Scan Code 1 (default) or Scan Code 2

T or L (Bank A)—Trip (T) (default) or Latch (L) Output

RR or Off—Reduced Resolution (default: Off)

T or L (Bank B)—Trip (T) (default) or Latch (L) Output ; the switch settings for bank A and bank B must match

RR or Off (Bank B)—Reduced Resolution (default: Off); the switch settings for bank A and bank B must match

E1 or E2—EDM 1-Channel or EDM 2-Channel (default); if the EDM wiring does not match the switch position shown (E2), an EDM error occurs and fixed blanking or cascade configuration will not be allowed.

Because it has redundant microprocessors, the receiver has two DIP switch banks (bank A and bank B) that must be set identically. Failure to do so will cause a Lockout condition when power is applied. Power to the EZ-SCREEN SLS receiver should be OFF when changing DIP switch settings or a Lockout will occur.

Figure 30. EZ-SCREEN Configuration DIP Switches (Receiver)

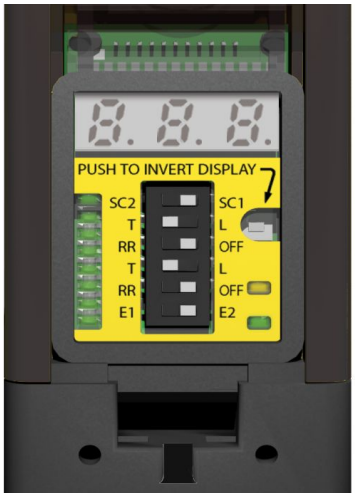

© Banner Engineering Corp. All rights reserved.
www.bannerengineering.com

After configuration settings are verified/set, fully close (snap shut) the access cover to maintain IP ratings. Other than the Scan Code, all configuration settings should be changed only when the System is off.

NOTE: The corresponding pairs of DIP switches must be set identically for the System to operate.

Scan Code allows the operation of multiple pairs of emitters and receivers in close proximity. Set the Scan Code to 1 or 2 using the switch on the configuration panel. The Scan Code setting for each emitter must match with its corresponding receiver. The Scan Code settings may be changed while in Run mode without causing a Lockout.

Trip or Latch Output operation is selected on two DIP switches in the receiver configuration port. Set both switches to the same setting. If they have different settings, an error code displays. If the switches are set for Trip Output (T), the System will auto-reset. If the switches are set for Latch Output (L), the System will require a manual reset.

External Device Monitoring (EDM)/Aux. Output—Select EDM mode via a 2-position DIP switch in the receiver configuration port. For 1-Channel Monitoring, set the EDM DIP switch to the E1 position. For 2-Channel Monitoring or No Monitoring, set the switch to the E2 position. See "Machine Primary Control Elements (MPCE) and External Device Monitoring (EDM) Input" on page 41 for more information. When 1-Channel Monitoring is selected, an auxiliary (aux.) output is available; see "Auxiliary (Aux.) Output" on page 43.

Reduced Resolution—Enable two-beam Reduced Resolution by selecting “RR” on both DIP switches as labeled. Enabling Reduced Resolution affects the Minimum Separation Distance (see "Calculating the Safety Distance (Minimum Distance)" on page 20).

6.2.1 Access the Configuration Panel

Before making any changes to the DIP switch configuration, follow these instructions to open the access panel.

1. Remove the security plate using the security plate tool supplied.



2. Using a small, flat-bladed screwdriver or the security plate tool, push the plastic tab on the access cover inwards at a 45° angle.



3. Pivot the screwdriver against the bevel until the access cover pops open.
4. Make your changes to the DIP switch settings.
5. To close the access cover, push the cover into place until it "snaps" into place. The access cover has been designed to be removable, so if it should come off, snap it back onto the hinge and close it.
6. Replace the security plate with the tamper-resistant screws provided, using the security plate tool.

It is important to snap close the cover to maintain the sensors’ IP65 environmental rating. If an access cover is lost or damaged, order a replacement from the factory (see "Replacement Parts" on page 94). For installations subject to shock and vibration, always reinstall the security plate.

© Banner Engineering Corp. All rights reserved.
www.bannerengineering.com

6.2.2 Inverted Display

To invert the display, use a push button located under the access cover. Invert the display when an emitter and receiver are mounted with the QD connector ends up. Replacement access covers with inverted labels can be requested from Banner Engineering to accommodate inverted mounting (see "Replacement Parts" on page 94).

6.2.3 Selectable Trip/Latch Outputs

The setting for Trip or Latch Output determines whether the System will enter RUN mode automatically after power-up, or if it will require a manual reset first. If the System is set for Trip Output, other measures must be taken to prevent a pass-through hazard.

- If Trip Output is selected, the OSSD outputs will turn ON after power is applied and the receiver passes its internal self-test/synchronization and recognizes that all beams are clear. The OSSD outputs will also turn on after all beams are cleared following a blocked beam.
- If Latch Output is selected, the EZ-SCREEN SLS requires a manual reset for the OSSD outputs to turn ON, whenever power is applied and all beams are clear, or following a blocked beam.

WARNING:

- **Use of automatic (trip) or manual (latch) start/restart**
- Failure to follow these instructions could result in a serious injury or death.
- Applying power to the Banner Engineering Corp. device, clearing the defined area, or resetting a latch condition must not initiate dangerous machine motion. Design the machine control circuitry so that one or more initiation devices must be engaged to start the machine (a conscious act), in addition to the Banner Engineering Corp. device going into Run mode.

6.3 Reset Procedures

System resets are performed using an external reset switch. This switch must be located outside the guarded area, and must not be within reach from within the guarded area (see "Reset Switch Location" on page 23). Its location should provide a clear view of the entire safeguarded area. If any hazardous area is not in view from the switch location, additional means of safeguarding must be provided. The switch should be protected from accidental or unintended actuation (for example, through the use of rings or guards).

If supervisory control of the reset switch is required, a key reset (manual reset) switch may be used, with the key kept in the possession of a Designated Person or Qualified Person. Using a key switch provides some level of personal control, since the key may be removed from the switch. This hinders a reset while the key is under the control of an individual, but must not be relied upon solely to guard against accidental or unauthorized reset. Spare keys in the possession of others or additional personnel entering the safeguarded area unnoticed may create a hazardous situation.

6.3.1 Manual Resets and Lockout Conditions

Reset Routine—The EZ-SCREEN SLS requires a manual reset to clear a power-up lockout condition or latch condition, and after the cause of a lockout condition is corrected. This function is designed to provide a monitored manual reset (that is, an open-closed-open action), such that a shorted or tied-down button cannot cause a reset. When a key-operated switch is used, it is typically called a key reset (manual reset).

To perform a manual reset, close the normally open switch for at least 0.25 second, but no longer than 2 seconds, then re-open the switch.

A lockout condition causes the EZ-SCREEN SLS OSSD outputs to turn Off. A lockout condition is indicated by a flashing red emitter or receiver Status indicator and an error number displayed on the Diagnostic Display. Internal lockout conditions require a manual reset routine to return the System to Run mode after the failure has been corrected and the input has been correctly cycled. A description of possible lockouts, their causes, and troubleshooting hints are listed in "Troubleshooting" on page 79.

Trip Output/Auto Reset—While the use of a reset switch is recommended, it is not required for EZ-SCREEN SLS receivers that are configured for Trip Output (automatic reset). Cycling the supply power (Off for > 2 seconds, then On) also clears lockouts if their cause has been corrected. If a reset switch is not used, leave pin 8 (violet wire) not connected (open) and secure it against shorting to a source of power or ground.

© Banner Engineering Corp. All rights reserved.
www.bannerengineering.com

6.3.2 Resetting the Receiver

The EZ-SCREEN SLS receiver has a Reset input, pin 8 (Violet wire), that allows the System to be manually reset.

The EZ-SCREEN SLS requires a manual reset to clear a Latch condition and resume operation following a stop command. Internal Lockout conditions also require a manual reset to return the System to Run mode after the failure has been corrected and the input correctly cycled.

Receiver manual resets are required in the following situations:

- Trip Output operation—only after a System Lockout
- Latch Output operation—at power-up, after each Latch condition occurs, and after a System Lockout

To reset the receiver:

1. Close the reset switch for 1/4 to 2 seconds. (If the reset switch model MGA-KS0-1 is used, turn the key 1/4 turn clockwise to close.)
2. Open the switch. (If the reset switch model MGA-KS0-1 is used, turn the key counterclockwise, back to its original position, to open.)

> **IMPORTANT:** Closing the reset switch too long causes the System to ignore the reset request. The switch must be closed from 1/4 second to 2 seconds, but no longer.

6.3.3 Resetting the Emitter

In the rare occurrence that an emitter requires a reset, power the sensor down, then power it up. Emitter resets are needed only if a Lockout occurs.

6.4 Status Indicators

Status indicators on both the emitter and receiver are clearly visible on each sensor’s front panel.

Table 5. Emitter

Key	Description
A	Status Indicator (Red/Green)—shows whether power is applied and whether the emitter is in Run mode, TEST mode, or Lockout condition.
B	1-digit Diagnostic Display—indicates specific error or configuration conditions.

Figure 31. Emitter

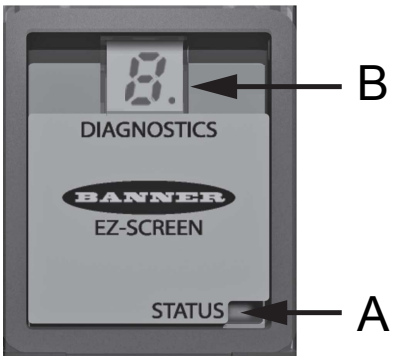

© Banner Engineering Corp. All rights reserved.

Table 6. Receiver

Key	Description
A	Reset indicator (Yellow)—shows System status: • Run mode (ON) • Waiting for a reset (flashing)
B	Status indicator (Red/Green)—shows System status: • Reduced Resolution enabled (flashing green) • Outputs are ON or OFF (green ON or red ON) • The System is in Lockout condition (flashing red)
C	3-Digit Diagnostic Display—indicates specific error, configuration conditions, or total number of blocked beams.
D	Zone indicators (Red/Green)—each shows status of approximately 1/8 of the total beams: • Aligned and clear (green ON) • Blocked and/or misaligned (red ON) • Fixed blanked area (flashing green)
E	Zone 1 Indicator—indicates beam synchronization status

Figure 32. Receiver

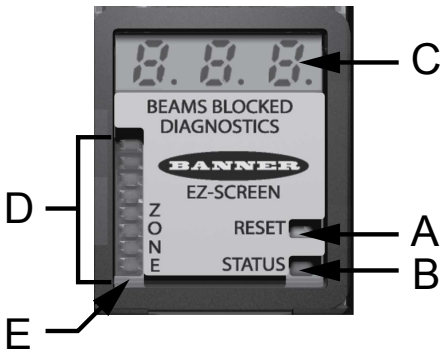

6.4.1 Emitter Status Indicators

A single bi-color red/green Status indicator shows whether power is applied, and whether the emitter is in Run mode optional Test mode, or Lockout status. A Diagnostic Display indicates a specific error code when the emitter is in Lockout; the display also momentarily indicates the scan code setting at power-up or when changed.

Operating Status	Required Event	Status Indicator	Diagnostic Display
Power-up	Apply Power	Red single-flash	Scan code flash 3 times, alternates C then 1 or C then 2
Run Mode	Passes internal tests	Green	-
Test Mode	Open Test switch	Flashing green	-
Lockout	Internal/external fault	Flashing red	Displays error code (see "Troubleshooting" on page 79)

6.4.2 Receiver Status Indicators

Bi-color red/green Zone indicators show whether a section of the defined area is aligned and clear, or is blocked and/or misaligned. A yellow Reset indicator shows when the System is in Run mode or is waiting for a reset. There are eight Zone indicators for all model lengths, each of which indicates Blocked/Clear conditions for approximately 1/8 of the total light screen.

A bi-color Red/Green Status indicator shows when the OSSD outputs are ON (green) or OFF (red), or the System is in Lockout status (flashing red). Note: A lockout results in all the zone indicators turning off. If the zone indicators are red or green, the system is not locked out. The Diagnostic Display indicates the receiver's trip (–) or latch (L) configuration setting and displays a specific error code when the receiver is in Lockout. The Diagnostic Display also momentarily indicates the scan code at power-up or when changed.

Receiver Indicators when Configured for Trip Output

Operating Mode	Required Event	Reset Indicator	Status Indicator	Zone Indicators	Diagnostic Displays	OSSD Outputs
Power-up	Apply power	Off	Single-Flash Red	All Single-Flash Red	Scan code flashes 3 times, alternates C then 1 or C then 2	Off
Alignment Mode - Beam 1 Blocked	Pass internal tests	Off	Off	Zone 1 Red(3) Others Off	C H 1	Off

Continued on page 54

(3) If beam 1 is blocked, Zone indicators 2–8 will be Off, because beam 1 provides the synchronization signal for all the beams.

© Banner Engineering Corp. All rights reserved.
www.bannerengineering.com

Continued from page 53

Operating Mode	Required Event	Reset Indicator	Status Indicator	Zone Indicators	Diagnostic Displays			OSSD Outputs
Alignment Mode - Beam 1 Clear	Align Beam 1	On	Red	Zone 1 Green; others are Red or Green	Total number of blocked beams			Off
Run Mode - Clear	Align all beams	On	On or Flashing Green(4)	All On Green	Off		Off	On
Run Mode - Blocked	Beam(s) blocked	On	Red	Red or Green (5)	Total number of blocked beams			Off
Noise Detected - Reset Interface					Flashing 	Continues previous reading	Continues previous reading	
Noise Detected - EDM Interface					Continues previous reading	Continues previous reading	Flashing 	
Lockout	Internal/ external fault	Off	Flashing Red	All Off	Displays error code (see "Troubleshooting" on page 79)			Off

Receiver Indicators when Configured for Latch Output

Operating Mode	Required Event	Reset Indicator	Status Indicator	Zone Indicators	Diagnostic Displays			OSSD Outputs
Power-up	Apply power	Off	Single-Flash Red	All Single-Flash Red	Scan code flashes 3 times, alternates  then  or  then 			Off
Alignment Mode - Beam 1 Blocked	Pass internal tests	Off	Off	Zone 1Red(6) Others Off				Off
Alignment Mode - Beam 1 Clear	Align Beam 1	On	Red	Beam 1 Green Others Red or Green	Total number of blocked beams			Off
Alignment Mode - All Beams Clear	Align all beams	Double-flash	Red	All on Green	Off		Off	Off
Run Mode - Clear	Perform reset	On	On or Flashing Green(7)	All On Green	Off		Off	On
Latched - Blocked Beam 1 Blocked	Block Beam 1	On	Red	Red or Green(8)				Off
Latched - Blocked Beam 1 Clear	Block 1 or More Beams	On	Red	Red or Green(9)	Total number of blocked beams			Off
Latched - Clear	Clear all beams	Flashing	Red	All On Green	Off		Off	Off
Noise Detected - Reset Interface					Flashing 	Continues previous reading	Continues previous reading	
Noise Detected - EDM Interface					Continues previous reading	Continues previous reading	Flashing 	
Lockout	Internal/external fault	Off	Flashing Red	All Off	Displays error code (see "Troubleshooting" on page 79)			Off

6.4.3 Status Indicators for Cascaded Applications

When multiple light screens are cascaded, some unique indications may occur.

When a receiver's CSSI input is in a Stop condition (because of a blocked light screen further upstream in the cascade or because of a Stop signal from an E-stop button, for example), the display on the downstream receivers, including the master receiver, will be bracketed by a pair of vertical "goalposts."

(4) Flashing if Reduced Resolution is enabled.
(5) If beam 1 is blocked, Zone indicators 2–8 will be Off, because beam 1 provides the synchronization signal for all the beams.
(6) If beam 1 is blocked, Zone indicators 2–8 will be Off, because beam 1 provides the synchronization signal for all the beams.
(7) Flashing if Reduced Resolution is enabled.
(8) If beam 1 is blocked, Zone indicators 2–8 will be Off, because beam 1 provides the synchronization signal for all the beams.
(9) If beam 1 is blocked, Zone indicators 2–8 will be Off, because beam 1 provides the synchronization signal for all the beams.

© Banner Engineering Corp. All rights reserved.
www.bannerengineering.com

Receiver #1 (Master)				
Condition	**OSSDs**	**Display**	**Reset Indicator**	**Status Indicator**
Clear	On	1	On	Green
CSSI Stop (Receiver #2, 3, or 4 is blocked)	Off	- -	On	Red
Latch	Off	L	Flashing	Red

Receiver #2, 3, or 4				
Condition	**OSSDs**	**Display**	**Reset Indicator**	**Status Indicator**
Clear	On	-	On	Green
Blocked	Off	# of beams blocked	On	Red
CSSI Stop (Receiver upstream is blocked)	Off	- -	On	Red
Cleared	On	-	On	Green

Figure 33. Cascade indicator status: Cascade powered up clear

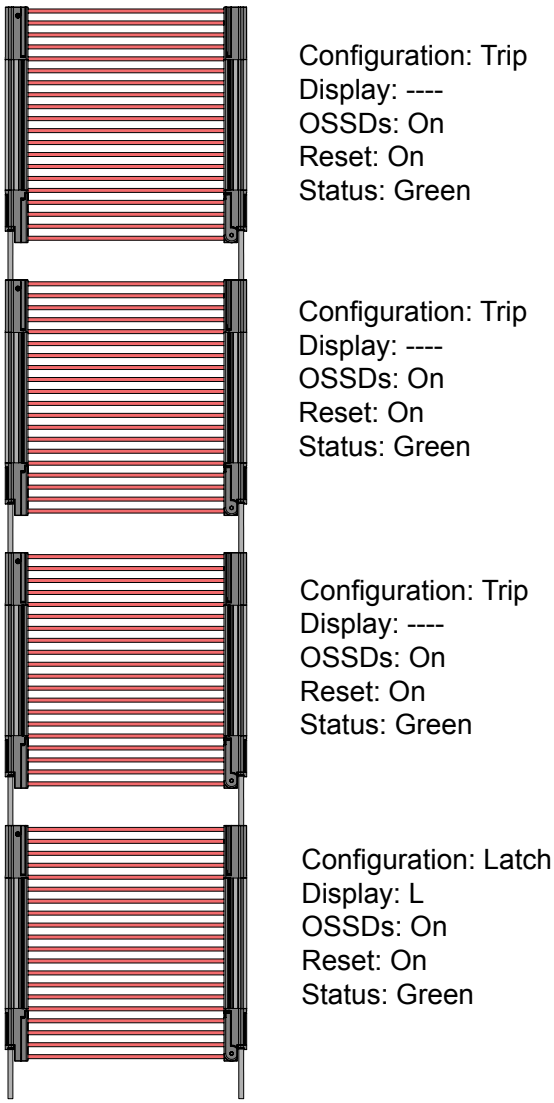

© Banner Engineering Corp. All rights reserved.
www.bannerengineering.com

Figure 34. Cascade indicator status: An object is blocking light curtain #4

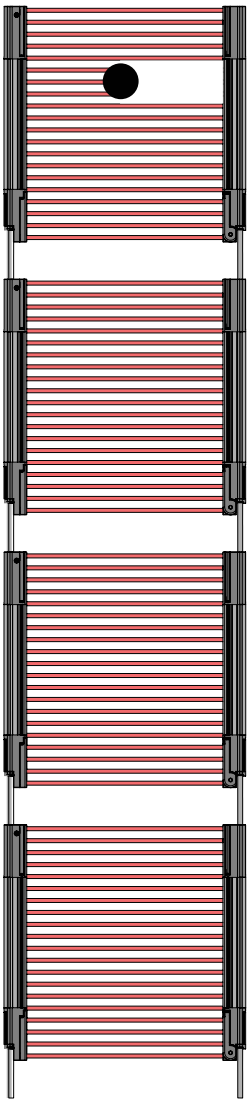

Configuration: Trip
Display: beams blocked
OSSDs: Off
Reset: On
Status: Red

Configuration: Trip
Display: |--|
OSSDs: Off
Reset: On
Status: Red

Configuration: Trip
Display: |--|
OSSDs: Off
Reset: On
Status: Red

Configuration: Latch
Display: |--|
OSSDs: Off
Reset: On
Status: Red

© Banner Engineering Corp. All rights reserved.
www.bannerengineering.com

Figure 35. Cascade indicator status: An object is blocking light curtain #3

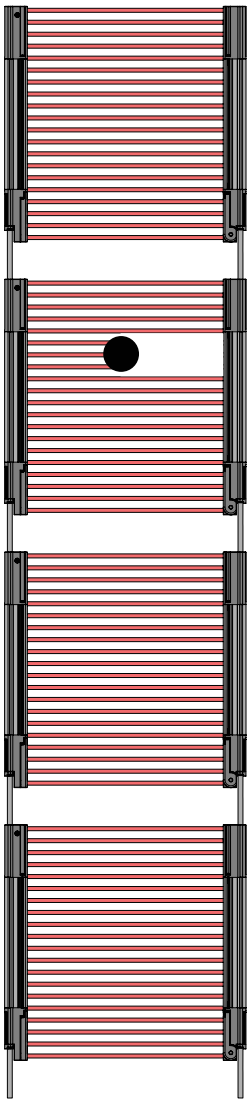

Configuration: Trip
Display: ----
OSSDs: On
Reset: On
Status: Green

Configuration: Trip
Display: beams blocked
OSSDs: Off
Reset: On
Status: Red

Configuration: Trip
Display: |--|
OSSDs: Off
Reset: On
Status: Red

Configuration: Latch
Display: |--|
OSSDs: Off
Reset: On
Status: Red

© Banner Engineering Corp. All rights reserved.
www.bannerengineering.com

Figure 36. Cascade indicator status: The object has been removed; cascade is waiting for reset

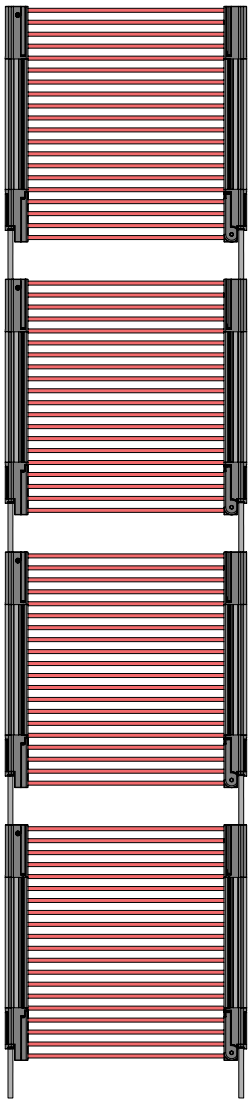

6.5 Normal Operation

6.5.1 System Power-Up

The EZ-SCREEN SLS powers up in one of two ways, depending on the trip/latch output configuration. If it is set for trip output, it powers up and resets automatically; if it is set for latch output, it requires a manual reset procedure after the power-up and sensor alignment.

Trip Output Power-Up: When power is applied, each sensor conducts self-tests to detect critical internal faults, determine configuration settings, and prepare the EZ-SCREEN SLS for operation. If either sensor detects a critical fault, scanning ceases, the receiver outputs remain Off and diagnostic information displays on the sensor's Diagnostic Display. If no faults are detected, the EZ-SCREEN SLS automatically enters Alignment mode, and the receiver looks for an optical sync pattern from the emitter. If the receiver is aligned and receives the proper sync pattern, it enters Run mode and begins scanning to determine the blocked or clear status of each beam. No manual reset operation is required.

Latch Output Power-Up: When power is applied, each sensor conducts self-tests to detect critical internal faults, determine configuration settings, and prepare for operation. If either sensor detects a critical fault, scanning ceases, the receiver outputs remain Off and diagnostic information is displayed on the sensor's Diagnostic Display. If no faults are detected, the EZ-SCREEN SLS automatically enters Alignment mode, and the receiver looks for an optical sync pattern from the emitter. If the receiver is aligned and receives the proper sync pattern, it begins scanning to determine the blocked or clear status of each

© Banner Engineering Corp. All rights reserved.

beam. When all beams are aligned, the Yellow Reset indicator double-flashes to indicate the EZ-SCREEN SLS is waiting for a manual reset. After a valid manual reset, the EZ-SCREEN SLS enters Run mode and continues scanning.

6.5.2 Run Mode

Trip Output Configuration—If any beams become blocked while the EZ-SCREEN SLS is running with Trip Output selected, the receiver outputs turn OFF within the stated EZ-SCREEN SLS response time (see "Components" on page 16). If all the beams then become clear, the receiver outputs come back ON. No resets of any kind are needed. All required machine control resets are provided by the machine control circuit.

Latch Output Configuration—If any beams become blocked while the EZ-SCREEN SLS is running with Latch Output selected, the receiver outputs turn OFF within the stated EZ-SCREEN SLS response time (see "Components" on page 16). If all the beams then become clear, the receiver Zone indicators will all be Green and the Reset indicator will single-flash, indicating the EZ-SCREEN SLS is waiting for a manual latch reset. In Latch Output operation, the outputs come back ON only when all beams are clear and after a manual reset. The EZ-SCREEN SLS will wait for a manual reset; when a valid reset signal is received and all beams remain clear, the receiver outputs turn ON.

Internal Faults (Lockouts)—If either sensor detects a critical fault, scanning ceases, the receiver outputs turn OFF and diagnostic information is displayed through the sensor's front window. See "Troubleshooting" on page 79 for resolution of error/fault conditions.

6.6 Periodic Checkout Requirements

To ensure continued reliable operation, the System must be checked out periodically. Banner Engineering highly recommends performing the System checkouts as described below. However, a Qualified Person should evaluate these recommendations, based on the specific application and the results of a machine risk assessment, to determine the appropriate content and frequency of checkouts.

At every shift change, power-up, and machine setup change, the Daily Checkout should be performed; this checkout may be performed by a Designated or Qualified Person.

Semi-annually, the System and its interface to the guarded machine should be thoroughly checked out; this checkout must be performed by a Qualified Person (see "Checkout Procedures" on page 60). A copy of these test results should be posted on or near the machine.

Whenever changes are made to the System (either a new configuration of the EZ-SCREEN SLS System or changes to the machine), perform the Commissioning Checkout (see "Commissioning Checkout" on page 60).

Verify Proper Operation The EZ-SCREEN SLS can operate as it is designed only if it and the guarded machine are operating properly, both separately and together. It is the user's responsibility to verify this, on a regular basis, as instructed in "Checkout Procedures" on page 60. Failure to correct such problems can result in an increased risk of harm. Before the System is put back into service, verify that the EZ-SCREEN SLS System and the guarded machine perform exactly as outlined in the checkout procedures and any problem(s) are found and corrected.

© Banner Engineering Corp. All rights reserved.
www.bannerengineering.com

Chapter Contents

7.1 Schedule of Checkouts 60
7.2 Commissioning Checkout 60
7.3 Shift/Daily Checkout 62
7.4 Semi-Annual (Six-Month) Checkout 62

Chapter 7 Checkout Procedures

This section lists the schedule of checkout procedures and describes where each procedure is documented. Checkouts must be performed as described. Results should be recorded and kept in the appropriate place (for example, near the machine, and/or in a technical file).

Banner Engineering highly recommends performing the System checkouts as described. However, a Qualified Person (or team) should evaluate these generic recommendations, considering their specific application, and determine the appropriate frequency of checkouts. This will generally be determined by a risk assessment, such as the one contained in ANSI B11.0. The result of the risk assessment will drive the frequency and content of the periodic checkout procedures and must be followed.

7.1 Schedule of Checkouts

Checkout cards and this manual can be downloaded at www.bannerengineering.com.

Checkout Procedure	When to Perform	Where to Find the Procedure	Who Must Perform the Procedure
Trip Test	At Installation Any time the System, the guarded machine, or any part of the application is altered.	"Perform a Trip Test" on page 37	Qualified Person
Commissioning Checkout	At Installation Whenever changes are made to the System (for example, either a new configuration of the EZ-SCREEN SLS or changes to the guarded machine).	"Commissioning Checkout" on page 60	Qualified Person
Shift/Daily Checkout	At each shift change Machine setup change Whenever the System is powered up During continuous machine run periods, this checkout should be performed at intervals not to exceed 24 hours.	**Daily Checkout Card** (Banner p/n 113361 for SLS models and 118173 for SLSC models) A copy of the checkout results should be recorded and kept in the appropriate place (for example, near or on the machine, in the machine's technical file).	Designated Person or Qualified Person
Semi-Annual Checkout	Every six months following System installation, or whenever changes are made to the System (either a new configuration of the EZ-SCREEN SLS or changes to the machine).	**Semi-Annual Checkout Card** (Banner p/n 113362) A copy of the checkout results should be recorded and kept in the appropriate place (for example, near or on the machine, in the machine's technical file).	Qualified Person

7.2 Commissioning Checkout

WARNING:

- **Do not use the system until the checkouts are verified**
- Attempts to use the guarded/controlled machine before these checks are verified could result in serious injury or death.
- If all these checks cannot be verified, do not attempt to use the safety system that includes the Banner Engineering Corp. device and the guarded/controlled machine until the defect or problem has been corrected.

© Banner Engineering Corp. All rights reserved.
www.bannerengineering.com

Perform this checkout procedure as part of the System installation after the System has been interfaced to the guarded machine, or whenever changes are made to the System (either a new configuration of the EZ-SCREEN SLS or changes to the machine). A Qualified Person must perform the procedure. Checkout results should be recorded and kept on or near the guarded machine as required by applicable standards.

To prepare the System for this checkout:

1. Examine the guarded machine to verify that it is of a type and design compatible with the EZ-SCREEN SLS System. See "Appropriate Applications and Limitations" on page 11 for a list of appropriate and inappropriate applications.
2. Verify that the EZ-SCREEN SLS is configured for the intended application.
3. Verify that the safety distance (minimum distance) from the closest danger point of the guarded machine to the defined area is not less than the calculated distance, per "Calculating the Safety Distance (Minimum Distance)" on page 20.
4. Verify that:
   - Access to any dangerous parts of the guarded machine is not possible from any direction not protected by the EZ-SCREEN SLS System, hard (fixed) guarding, or supplemental safeguarding, and
   - It is not possible for a person to stand between the defined area and the dangerous parts of the machine, or
   - Supplemental safeguarding and hard (fixed) guarding, as described by the appropriate safety standards, are in place and functioning properly in any space (between the defined area and any hazard) which is large enough to allow a person to stand undetected by the EZ-SCREEN SLS.
5. If used, verify that all reset switches are mounted outside and in full view of the guarded area, out of reach of anyone inside the guarded area, and that means of preventing inadvertent use is in place.
6. Examine the electrical wiring connections between the EZ-SCREEN SLS OSSD outputs and the guarded machine's control elements to verify that the wiring meets the requirements stated in "Electrical Connections to the Guarded Machine" on page 39.
7. Inspect the area near the defined area (including work pieces and the guarded machine) for reflective surfaces (see "Adjacent Reflective Surfaces" on page 25). Remove the reflective surfaces if possible by relocating them, painting, masking or roughening them. Remaining problem reflections will become apparent during the Trip Test.
8. Verify that power to the guarded machine is Off. Remove all obstructions from the defined area. Apply power to the EZ-SCREEN SLS System. If the EZ-SCREEN SLS is configured for Manual Power-Up, the amber Status indicator will be double-flashing. Perform a manual reset (close the reset switch for 0.25 to 2 seconds, then open the switch).
9. Observe the Status indicators and Diagnostic Display:
   - **Lockout:** Status flashing red; all others Off
   - **Blocked:** Status On red; one or more Zone indicators On red; Reset On amber
   - **Clear:** Status On green[10]; all Zone indicators On green; Reset On amber
   - **Latch:** (defined area clear) Status On red; all Zone indicators On green; Reset double-flashing amber
10. A Blocked condition indicates that one or more of the beams is misaligned or interrupted. To correct this situation, see "Optically Align the SLS Components" on page 34. If the System is in a Latch condition, perform a manual reset.
11. After the green and amber Status indicators are On, **perform the trip test** ("Perform a Trip Test" on page 37) on each sensing field to verify proper System operation and to detect possible optical short circuits or reflection problems. **Do not continue until the EZ-SCREEN SLS passes the trip test. Do not expose any individual to any hazard during the following checks.**

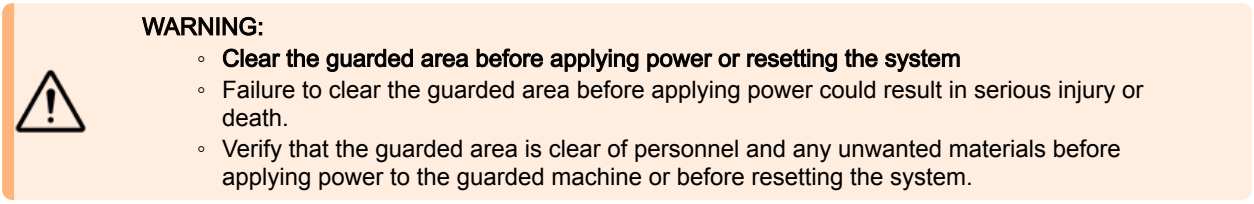

12. Apply power to the guarded machine and verify that the machine does not start up.
13. Interrupt (block) the defined area with the appropriate test piece (ordered separately) and verify that it is not possible for the guarded machine to be put into motion while the beam(s) is blocked.
14. Initiate machine motion of the guarded machine and, while it is moving, use the appropriate test piece (ordered separately) to block the defined area. Do not attempt to insert the test piece into the dangerous parts of the machine. Upon blocking any beam, the dangerous parts of the machine must come to a stop with no apparent delay.

[10] The status indicator flashes green if reduced resolution is enabled.

© Banner Engineering Corp. All rights reserved.
www.bannerengineering.com

15. Remove the test piece from the beam; verify that the machine does not automatically restart, and that the initiation devices must be engaged to restart the machine.
16. Remove electrical power to the EZ-SCREEN SLS. Both OSSD outputs should immediately turn Off, and the machine must not be capable of starting until power is re-applied to the EZ-SCREEN SLS.
17. Test the machine stopping response time, using an instrument designed for that purpose, to verify that it is the same or less than the overall system response time specified by the machine manufacturer. **Do not continue operation until the entire checkout procedure is complete and all problems are corrected.**

7.3 Shift/Daily Checkout

Perform the procedure contained on the **Daily Checkout** card at every shift change, power-up, and machine set-up change. During continuous machine run periods, this checkout should be performed at intervals not to exceed 24 hours.

A **Designated Person** or **Qualified Person** must perform the procedure. A copy of checkout results should be recorded and kept in the appropriate place (for example, near or on the machine, in the machine's technical file).

Refer to the procedure detailed on the **Daily Checkout** card (Banner p/n 113361 for SLS.. models, P/N 118173 for SLSC.. models), which can be downloaded from www.bannerengineering.com.

7.4 Semi-Annual (Six-Month) Checkout

Perform the procedure on the **Semi-Annual Checkout** card every six months following System installation, or whenever changes are made to the System (either a new configuration of the EZ-SCREEN or changes to the machine).

A **Qualified Person** must perform the procedure. A copy of checkout results should be recorded and kept in the appropriate place (for example, near or on the machine, in the machine's technical file).

Download a copy of the **Semi-Annual Checkout** card (Banner p/n 113362) at www.bannerengineering.com.

© Banner Engineering Corp. All rights reserved.
www.bannerengineering.com

Chapter Contents

8.1 Overview of Cascading 63
8.2 System Components and Specifications 64
8.3 Receiver Display 65
8.4 Determining Interconnect Cable Lengths 66
8.5 Response Time for Cascaded Light Screens 68
8.6 Cascaded Sensor Configuration Settings 71
8.7 Emergency Stop Buttons and Rope/Cable Pulls 73
8.8 Interlock Switches in Cascaded Systems 74

Chapter 8 Cascade

8.1 Overview of Cascading

EZ-SCREEN SLS emitters and receivers are also available in cascadable models. These models can be used as stand-alone light screens, or can be cascaded up to four systems. The cascaded sensor pairs can be any length, any number of beams, or have different resolutions (14 mm and 30 mm), as long as each emitter matches its own receiver.

NOTE: EZ-SCREEN SLS.. (standard) or SLSC.. (cascadable) models can be used as the end sensor pair of a cascade chain.

Special cabling is not required, but the double-ended 22-awg cordsets are recommended. Cabled QD models may be used to reduce the number of required cables. Response time depends on the number of beams in the light screen and the light screen's position in the cascade. Maximum system response time can be calculated easily for these cascaded systems, in two ways:

- Individually for each light screen in the cascade (separation distance is calculated for each light screen in the cascade), or
- Based on the worst-case maximum for the entire cascade (all light screens in the cascade have the same separation distance).

Figure 37. Cascaded light screens guarding two areas of one machine

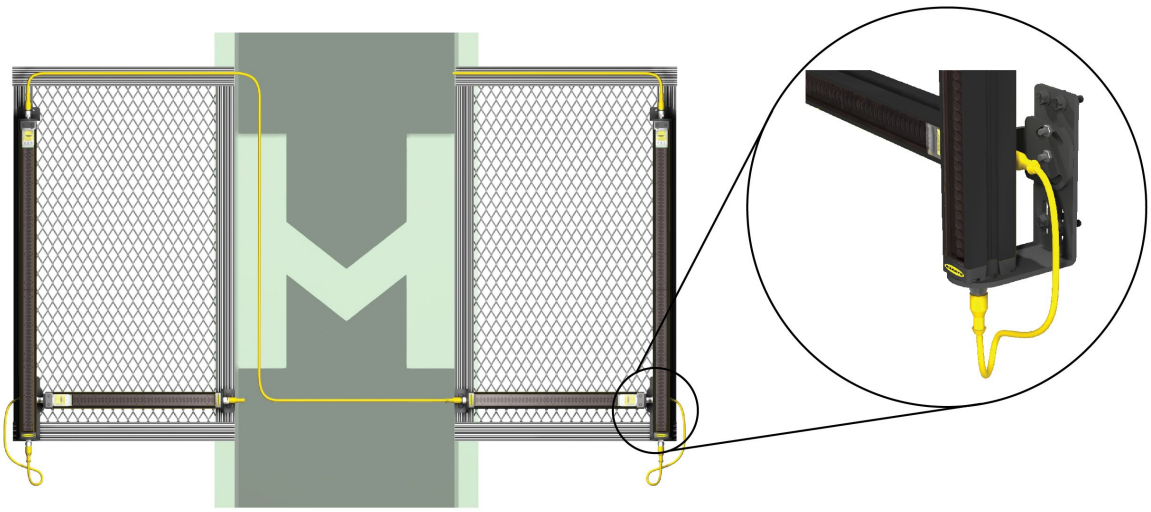

The receivers are shown using the EZA-MBK-21 "L" mounting bracket.

EZ-SCREEN SLS SLS models (with Inverted Display) can be used as the end sensor pair.

The control reliability, installation and alignment, electrical interface to the guarded machine, initial checkout, periodic checkout, troubleshooting, and maintenance features of cascadeable models are functionally identical to those of the

© Banner Engineering Corp. All rights reserved.
www.bannerengineering.com

standard models. Electrical connections are made through M12 quick-disconnect connectors. The emitter has an 8-pin connector for power and ground. Optional 5-pin emitters with Remote Test function are available.

The receiver has an 8-pin connector for power, ground, reset, EDM #1 and #2, and OSSD #1 and #2. All systems in a cascade are activating the same set of OSSD outputs, which are the OSSDs of the master receiver.

In a cascaded system, all receivers are connected together, and all emitters are connected together.

8.2 System Components and Specifications

A stand-alone cascadeable EZ-SCREEN SLS system includes a compatible emitter and receiver (equal length and resolution; available separately or in pairs), a terminator plug for the receiver and two single-ended (machine interface) cables.

A multiple-light screen cascaded EZ-SCREEN SLS system includes compatible emitter/receiver pairs (up to four), a terminator plug for the last receiver in the cascade, two single-ended cables to interface with the machine and provide power to the system, and pairs of double-ended (sensor interface) cables to interconnect the emitters and the receivers in the cascade.

The terminator plug must be used on the receiver in a stand-alone system, and on the last receiver in a multiple-system cascade or, a QDE2R4-8..D cable interfaced with an E-stop or other hard contacts (see "Emergency Stop Buttons and Rope/Cable Pulls" on page 73 and "Positive-Opening Interlocking Safety Switches" on page 75).

Available single-ended, double-ended, and splitter cables are listed in "Cordsets" on page 84. Cable lengths are limited – for both the power cables and the interconnect cables; see "Determining Interconnect Cable Lengths" on page 66 for more information.

> **IMPORTANT:** If a cascaded system requires the Remote Test function (see "Remote Test Input" on page 43), then all emitters in the cascade must be 5-pin emitter models (model SLSCE..-..Q5); the interconnection between these cascaded emitters can only be accomplished using 5-pin DEE2R-5..D cables.

8.2.1 Cascadeable Emitter and Receiver Models with 14 mm Resolution

The 14 mm Resolution Cascadeable Models have a 0.1 m to 6 m (4 in to 20 ft) range. Only standard 8-pin QD models are listed; 8-pin emitters/receivers feature “swapable” wiring. see "Initial Electrical Connections" on page 32 and "Sensor "Swapability"" on page 43.

For cabling options, see "Cordsets" on page 84.

Machine interface/power cables (one per end sensor, two per pair): Use QDE-..D cables.

Sensor interconnect cables (one per cascaded sensor, two per pair): Use DEE2R-..D cables.

Defined Area Height[11]	Emitter (8-pin)	Receiver	Emitter/Receiver Pair	Number of Beams	Response Time (Tr) (ms)
300 mm (11.8 in)	**SLSCE14-300Q8**	**SLSCR14-300Q8**	**SLSCP14-300Q88**	40	15
450 mm (17.7 in)	**SLSCE14-450Q8**	**SLSCR14-450Q8**	**SLSCP14-450Q88**	60	19
600 mm (23.6 in)	**SLSCE14-600Q8**	**SLSCR14-600Q8**	**SLSCP14-600Q88**	80	23
750 mm (29.5 in)	**SLSCE14-750Q8**	**SLSCR14-750Q8**	**SLSCP14-750Q88**	100	27
900 mm (35.4 in)	**SLSCE14-900Q8**	**SLSCR14-900Q8**	**SLSCP14-900Q88**	120	32
1050 mm (41.3 in)	**SLSCE14-1050Q8**	**SLSCR14-1050Q8**	**SLSCP14-1050Q88**	140	36
1200 mm (47.2 in)	**SLSCE14-1200Q8**	**SLSCR14-1200Q8**	**SLSCP14-1200Q88**	160	40
1350 mm (53.1 in)	**SLSCE14-1350Q8**	**SLSCR14-1350Q8**	**SLSCP14-1350Q88**	180	43
1500 mm (59 in)	**SLSCE14-1500Q8**	**SLSCR14-1500Q8**	**SLSCP14-1500Q88**	200	48
1650 mm (65 in)	**SLSCE14-1650Q8**	**SLSCR14-1650Q8**	**SLSCP14-1650Q88**	220	52
1800 mm (70.9 in)	**SLSCE14-1800Q8**	**SLSCR14-1800Q8**	**SLSCP14-1800Q88**	240	56

Other available models:

[11] 150 mm SLSC.. systems not available.

© Banner Engineering Corp. All rights reserved.
www.bannerengineering.com

To order the 5-pin emitters with Test input models, replace the suffix “Q8” with “Q5”, (e.g., SLSCE14-300Q5), and for the pair replace “Q88” with “Q85” (e.g., SLSCP14-300Q85). If a 5-pin emitter is used in the first (“master”) position in a cascaded system, then 5-pin emitters must be used in all other positions in that cascade.

To order the pigtail QD (8-pin models only), replace the “Q” in the model number with “P” (e.g., SLSCE14-300P8).

8.2.2 Cascadeable Emitter and Receiver Models with 30 mm Resolution

For cabling options, see "Cordsets" on page 84. Only standard 8-pin QD models are listed; 8-pin emitters/receivers feature “swapable” wiring; see "Initial Electrical Connections" on page 32 and "Sensor "Swapability"" on page 43.

Machine interface/power cables (one per end sensor, two per pair): Use QDE-..D cables.

Sensor interconnect cables (one per cascaded sensor, two per pair): Use DEE2R-..D cables.

Defined Area Height[12]	Emitter (8-pin)	Receiver	Emitter/Receiver Pair	Number of Beams	Response Time (Tr) (ms)
300 mm (11.8 in)	**SLSCE30-300Q8**	**SLSCR30-300Q8**	**SLSCP30-300Q88**	20	11
450 mm (17.7 in)	**SLSCE30-450Q8**	**SLSCR30-450Q8**	**SLSCP30-450Q88**	30	13
600 mm (23.6 in)	**SLSCE30-600Q8**	**SLSCR30-600Q8**	**SLSCP30-600Q88**	40	15
750 mm (29.5 in)	**SLSCE30-750Q8**	**SLSCR30-750Q8**	**SLSCP30-750Q88**	50	17
900 mm (35.4 in)	**SLSCE30-900Q8**	**SLSCR30-900Q8**	**SLSCP30-900Q88**	60	19
1050 mm (41.3 in)	**SLSCE30-1050Q8**	**SLSCR30-1050Q8**	**SLSCP30-1050Q88**	70	21
1200 mm (47.2 in)	**SLSCE30-1200Q8**	**SLSCR30-1200Q8**	**SLSCP30-1200Q88**	80	23
1350 mm (53.1 in)	**SLSCE30-1350Q8**	**SLSCR30-1350Q8**	**SLSCP30-1350Q88**	90	25
1500 mm (59 in)	**SLSCE30-1500Q8**	**SLSCR30-1500Q8**	**SLSCP30-1500Q88**	100	27
1650 mm (65 in)	**SLSCE30-1650Q8**	**SLSCR30-1650Q8**	**SLSCP30-1650Q88**	110	30
1800 mm (70.9 in)	**SLSCE30-1800Q8**	**SLSCR30-1800Q8**	**SLSCP30-1800Q88**	120	32
1950 mm (76.8 in)	**SLSCE30-1950Q8**	**SLSCR30-1950Q8**	**SLSCP30-1950Q88**	130	32
2100 mm (82.7 in)	**SLSCE30-2100Q8**	**SLSCR30-2100Q8**	**SLSCP30-2100Q88**	140	36
2250 mm (88.6 in)	**SLSCE30-2250Q8**	**SLSCR30-2250Q8**	**SLSCP30-2250Q88**	150	38
2400 mm (94.5 in)	**SLSCE30-2400Q8**	**SLSCR30-2400Q8**	**SLSCP30-2400Q88**	160	40

Other available models:

To order the 5-pin emitters with the Test input, replace suffix “Q8” with “Q5”, (e.g., SLSCE30-300Q5), and for the pair replace “Q88” with “Q85” (e.g., SLSCP30-300Q85). If a 5-pin emitter is used in the first (“master”) position in a cascaded system, then 5-pin emitters must be used in all other positions in that cascade.

To order the pigtail QD (8-pin models only) model, replace the “Q” in the model number with “P” (e.g., SLSCE30-300P8).

8.3 Receiver Display

In Run mode, the 7-digit display shows the following.

Condition	Display
Clear Condition—Latch output operation	
Clear Condition—Trip output operation	
Blocked	Number of blocked beams (sequential)
CSSI Input Off or open, for example, “upstream” receiver is blocked or in lockout	 Solid (not flashing)

[12] 150 mm SLSC.. systems not available.

© Banner Engineering Corp. All rights reserved.
www.bannerengineering.com

8.4 Determining Interconnect Cable Lengths

The following cable length charts are possible combinations for each side of example cascaded systems. All cables are assumed to be 22 awg wire. Other lengths and combinations are possible; please call factory for assistance.

As the machine interface cable lengthens, the voltage drop increases, which results in shorter possible interconnect cables to maintain supply voltage requirements at the cascaded sensor. See "Cordsets" on page 84 for a list of cordsets.

Table 7. Cable length options for two cascaded light screens (recommended cable pairing per side of the cascaded system)

Machine Interface Cable (L1) QDE-..D		**1 ft**	**3 ft**	**15 ft**	**25 ft**	**50 ft**	
	Maximum L2 [13]	**200 ft**	**200 ft**	**175 ft**	**135 ft**	**50 ft**	
Sensor Interconnect Cable Lengths (L2)	Individual DEE2R-..D cables (ft)	100	100	100	100		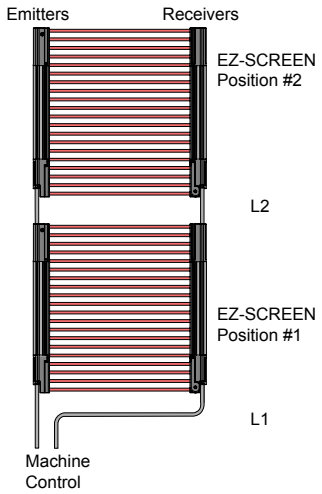
		75	75	75	75		
		50	50	50	50	50	
		25	25	25	25	25	
		15	15	15	15	15	
		3	3	3	3	3	
		1	1	1	1	1	

Example 1:

Machine Interface Cable (L1): 15 ft
Sensor Interconnect Cable (L2): 175 ft (Using one 100 ft and one 75 ft DEE2R cables) or 100 ft or shorter using single cables

Example 2:

Machine Interface Cable (L1): 50 ft
Sensor Interconnect Cable (L2): 50 ft or shorter

[13] Multiple DEE2R-..D cables may be required.

© Banner Engineering Corp. All rights reserved.
www.bannerengineering.com

Table 8. Cable length options for three cascaded light screens (recommended cable pairing per side of the cascade system)

Machine Interface Cable (L1) QDE-..D		1 ft		3 ft		15 ft		25 ft		
		L2 (ft)	L3 (ft)	L2 (ft)	L3 (ft)	L2 (ft)	L3 (ft)	L2 (ft)	L3 (ft)	
	Max. L2 (ft)	115	1	110	1	80	1	60	1	
	Max. L3 (ft)	1	200	1	200	1	155	1	110	
Sensor Interconnect Cable Lengths (L2, L3)	Individual DEE2R-..D cables (14)	100	15	100	15					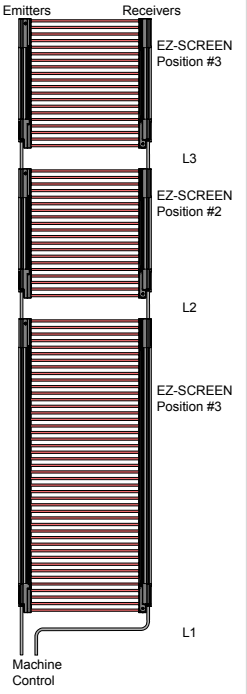
		75	75	75	50	75	15			
		50	100	50	100	50	50	50	15	
		25	100	25	100	25	100	25	50	
		15	100	15	100	15	100	15	75	
		3	100	3	100	3	100	3	100	
		1	100	1	100	1	100	1	100	

Example 1:

Machine Interface Cable (L1): 3 ft
Sensor Interconnect Cable (L2): 75 ft
Sensor Interconnect Cable (L3): 50 ft

Example 2:

Machine Interface Cable (L1): 15 ft
Sensor Interconnect Cable (L2): 75 ft
Sensor Interconnect Cable (L3): 15 ft

Because of the number of possible combinations, the following table includes only applications in which L2 = L4. A common installation example is one that protects two areas of a machine (for example, the front and back of a power press) and uses four EZ-SCREEN SLS pairs to create two “L”-shaped sensing fields.

Table 9. Cable length options for four cascaded light screens (recommended cable pairing per side of the cascaded system)

Machine Interface Cable (L1) QDE-..D:	1 ft			3 ft			15 ft			25 ft		
Sensor Interconnect Cables (L2, L3 and L4:	L2	L3	L4	L2	L3	L4	L2	L3	L4	L2	L3	L4
Maximum L3:	1 ft	110 ft	1 ft	1 ft	105 ft	1 ft	1 ft	75 ft	1 ft	1 ft	45 ft	1 ft
Individual DEE2R-..D cables(15)	50	15	50	50	15	50						
	25	50	25	25	50	25	25	25	25			
	15	75	15	15	75	15	15	25	15	15	15	15
	3	100	3	3	100	3	3	50	3	3	25	3
	1	100	1	1	100	1	1	75	1	1	25	1

(14) Multiple DEE2R-..D cables may be required.
(15) Multiple DEE2R-..D cables may be required

© Banner Engineering Corp. All rights reserved.
www.bannerengineering.com

Example 1:

Machine Interface Cable (L1): 15 ft
Sensor Interconnect Cable (L2): 1 ft
Sensor Interconnect Cable (L3): 75 ft
Sensor Interconnect Cable (L4): 1 ft

Example 2:

Machine Interface Cable (L1): 15 ft
Sensor Interconnect Cable (L2): 3 ft
Sensor Interconnect Cable (L3): 50 ft
Sensor Interconnect Cable (L4): 3 ft

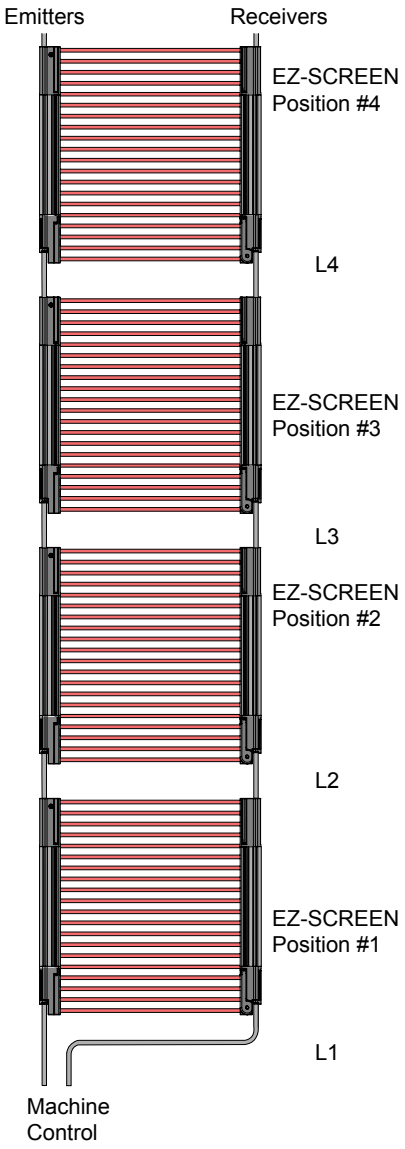

8.5 Response Time for Cascaded Light Screens

Response time is an important factor in determining a light screen's safety distance (minimum distance). For cascaded EZ-SCREEN SLS systems, that response time is dependent on the number of light screens, the number of beams in the light screens, and their positions in the cascade. It can be calculated easily, in two ways:

- Based on the worst-case time for the entire cascade (where all light screens in the cascade have the same safety distance)
- Individually for each light screen in the cascade (safety distance is calculated for each light screen in the cascade)

WARNING:

- **Properly install the device**
- Failure to follow the installation instructions can result in ineffective or non-operation of the Banner Engineering Corp. device, which could create an unsafe condition resulting in serious injury or death.
- Follow all installation instructions.

© Banner Engineering Corp. All rights reserved.
www.bannerengineering.com

8.5.1 Individual Response Time and Separation Distance

When calculating individual separation distance for each emitter/receiver pair, the pair's position in the cascade affects its response time, which then affects its separation distance. This method results in the closest possible separation distance for each light screen.

Response time depends on how far downstream the light screen is from the machine control. Each light screen position in the cascade, starting from the first light screen in the cascade, increases the light screen's response time by 2 ms.

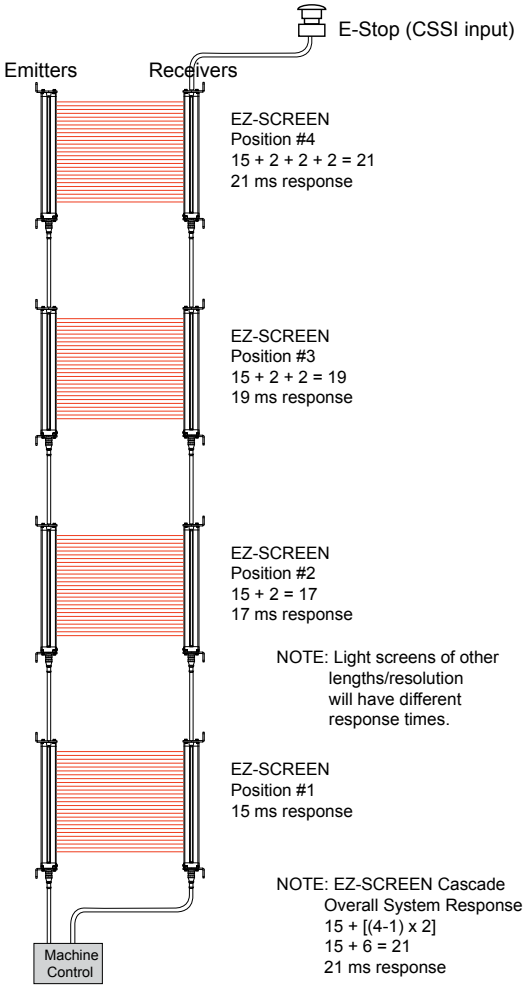

CSSI Response Time = 40 ms + [(4-1) x 2 ms] = 46 ms

The 14 mm resolution, 300 mm EZ-SCREEN SLS emitter/receiver pairs each begin with a response time of 15 ms.

The pair in position #1 (connected directly to the machine control), maintains its 15 ms response time. Response time for the second pair in the cascade circuit increases by 2 ms, to 17 ms; for the third pair by 4 ms, to 19 ms, and for the fourth pair by 6 ms, to 21 ms.

The formula used for U.S. applications (other standards may apply) to calculate separation distance for individual placement of each emitter/receiver pair in the cascaded system is:

Position #1: Ds = K (Ts + Tr) + Dpf
Position #2: Ds = K (Ts + Tr + 2 ms) + Dpf
Position #3: Ds = K (Ts + Tr + 4 ms) + Dpf
Position #4: Ds = K (Ts + Tr + 6 ms) + Dpf

Use the above formulas in place of the Ds formula in "Calculating the Safety Distance (Minimum Distance)" on page 20 to determine individual separation distance (Ds). This ensures each sensor pair is located at an adequate distance from the hazard.

© Banner Engineering Corp. All rights reserved.
www.bannerengineering.com

8.5.2 Overall Response Time and Safety (Minimum) Distance

The cascaded system's Overall Response Time (Tr) is equal to the response time of the individual sensor pair with the most beams (the slowest individual response time), plus an adder resulting from the number of systems in the cascade. Tr can be found by the following formula:

$$Tr = Tr_{(max)} + [(N-1) \times 2\ ms]$$

where:

$Tr_{(max)}$ is the response time of the slowest individual pair in the cascade (the pair with the most beams; see "Components" on page 16).
N is the number of sensor pairs in the cascade.

Use Tr value from the formula in "Calculating the Safety Distance (Minimum Distance)" on page 20 to determine Overall Safety Distance (Ds). This will ensure that all sensor pairs will be located at an adequate distance from the hazard, no matter how the system is installed.

When contacts, for example, an E-stop button, are connected to a cascaded receiver, the CSSI response time is 40 ms plus the 2 ms adder for each additional light screen, similar to the defined area Tr.

$$Tr_{(CSSI)} = 40\ ms + [(N-1) \times 2\ ms]$$

8.5.3 Cascade Configuration vs. Response Time

When light screens of different lengths or different resolutions (and therefore different response times) are used in one circuit, their positions in the cascade may become a consideration.

For example, consider the light screen circuits shown. Each example contains three safety light screens, one 1200 mm (with a response time of 40 ms), and two 300 mm light screens (15 ms response each). Depending on their placement in the cascade, the individual response time for the same three light screens can vary from 40 to 44 ms.

© Banner Engineering Corp. All rights reserved.
www.bannerengineering.com

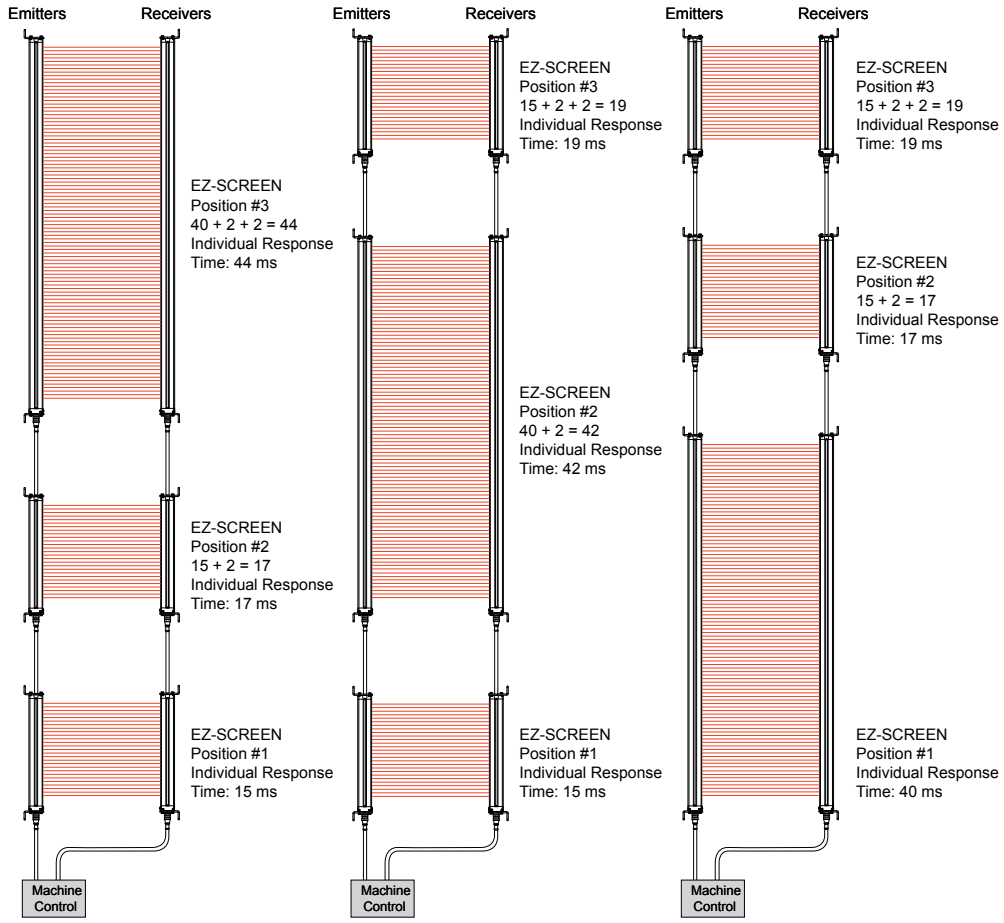

System Overall Response Time for all systems shown here is 40 + [(3-1) x 2 ms] = 44 ms

8.6 Cascaded Sensor Configuration Settings

Setting cascaded sensors for scan code, trip or latch output, external device monitoring (EDM), reduced resolution, fixed blanking and inverted display is identical to the procedure for non-cascadeable emitters and receivers (see "Operating Instructions " on page 49).

Scan codes for each emitter and receiver pair must match. However, for cascaded installations, scan codes must alternate on adjacent systems as described in "Installation of Multiple Systems" on page 28.

WARNING:

- **Use a scan code**
- If you do not use a scan code, a receiver can synchronize to the signal from the wrong emitter, reducing the safety function of the light curtain and creating an unsafe condition that could result in serious injury or death.
- Configure adjacent systems to use different scan codes (for example, set one system to use scan code 1 and the other system to use scan code 2). Perform a trip test to confirm the light curtain function.

While the scan code, reduced resolution, fixed blanking, and inverted display settings are independent for each cascaded sensor pair, the trip/latch mode and EDM settings must be determined by the first receiver in the cascade (closest to the machine interface), which controls the OSSD outputs. All other receivers in the cascade must be set for trip mode and 2-channel EDM (factory default settings).

© Banner Engineering Corp. All rights reserved.
www.bannerengineering.com

The settings on the first receiver then determine trip or latch mode and 1- or 2-channel EDM/aux. output, and this is the only receiver that requires a reset following a latch condition.

One or more areas within any cascaded EZ-SCREEN sensor pair can be blanked out, just as with other EZ-SCREEN SLS light screens. Blanking for each sensor pair within a cascade, if required, must be programmed separately. See "Fixed Blanking" on page 36.

8.6.1 Configure for Cascaded Operation

Configure each cascaded system before operating the system in a production environment.

Before configuration, install all emitters and receivers per "Installation Instructions" on page 19 and "Cascade" on page 63. The last receiver must be terminated either with a terminator plug or by connecting two closed mechanical contacts (see "Emergency Stop Buttons and Rope/Cable Pulls" on page 73 and "Positive-Opening Interlocking Safety Switches" on page 75).

WARNING:

- **Use a scan code**
- If you do not use a scan code, a receiver can synchronize to the signal from the wrong emitter, reducing the safety function of the light curtain and creating an unsafe condition that could result in serious injury or death.
- Configure adjacent systems to use different scan codes (for example, set one system to use scan code 1 and the other system to use scan code 2). Perform a trip test to confirm the light curtain function.

Perform the following procedure only on the first receiver in the cascade (closest to the machine interface).

1. From either normal operation or a power OFF condition, set the second and fifth DIP switches (RR and T/L) both to the left (RR and T position).
2. Set the third and fourth DIP switches (the second T/L and RR) both to the right (L and OFF position). The first and sixth DIP switches are not part of this process. Do not move them to match this figure.

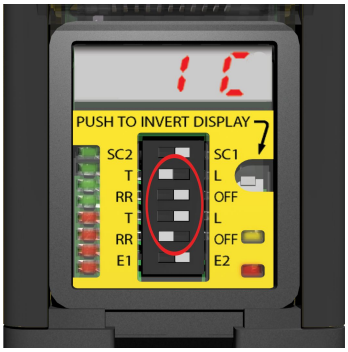

3. The receiver should be in a lockout condition or the power is off.
   - If the power is off, apply power.
   - If the receiver is in a lockout condition, perform a valid reset sequence (close the reset switch for 0.25 to 2 seconds, then reopen).

   Coming out of lockout or during startup, the DIP switch configuration will be recognized as Cascaded Teach Mode, indicated by the following:
   - The first receiver display shows: For no e-stop connected (“4C,” “3C,” or “2C” on); for an e-stop with closed contacts (“4CE,” “3CE,” or “2CE” on); or for an e-stop with open contacts (“4CE,” “3CE” or “2CE” flashing)
   - The last cascaded receiver display shows: For a terminator connected (“1C” on); for an e-stop with closed contacts (“1CE” on; or for an e-stop with open contacts (“1CE” flashing)
   - All other receivers display “1C” on
   - All receiver Zone indicators are off
   - All receiver amber reset indicators are off
   - All receiver Status indicators are red
4. To enable and exit Cascade Teach Mode, reconfigure the DIP switches for normal operation.

© Banner Engineering Corp. All rights reserved.
www.bannerengineering.com

5. Perform a valid reset sequence or cycle the power.

8.7 Emergency Stop Buttons and Rope/Cable Pulls

Cascadeable EZ-SCREEN SLS receivers may be connected to one or more emergency stop buttons. Connect the button(s) to the end of the last receiver in the cascade, in place of the terminator plug. The connected e-stop button(s) will activate/deactivate the OSSD outputs in all receivers in the cascade.

The number of e-stop buttons allowed in a series connection is limited by the total resistance per channel. The total resistance is the sum of all contact resistance values in the channel, plus the total wire resistance in the channel. The maximum total resistance per channel is 100 Ohms.

IMPORTANT: The simultaneity between the two e-stop contacts, on opening and closing, is 3 seconds. If simultaneity is not met on either opening or closing, the first receiver's display flashes "|- - -|." If simultaneity is not met on opening, the closed contact can be opened later (after more than 3 seconds), then both contacts must be closed again.

Figure 38. Wiring of emergency stop buttons to the last receiver in the cascade.

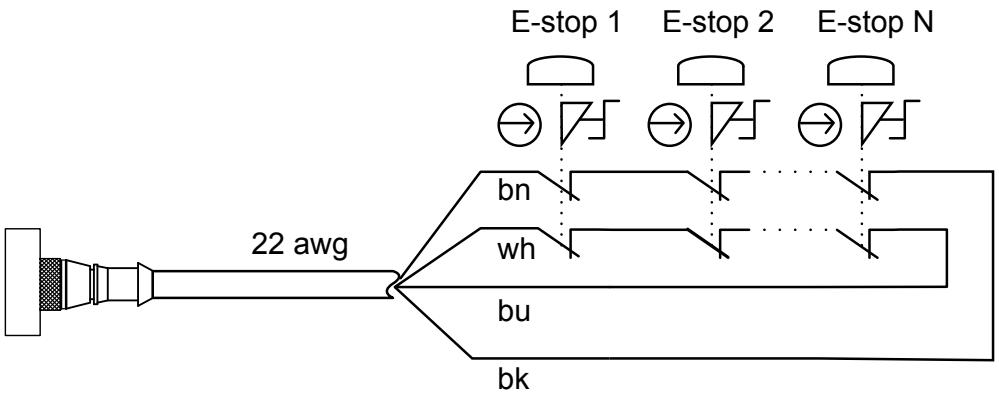

QDE2R4-8..D Cable Pinout [16]		
Pin	**Color**	**Description**
1	brown (bn)	Ch 1a
2		No Connection
3		No Connection
4	Black (bk)	Ch 1b
5	Blue (bu)	Ch 2b
6		No Connection
7		No Connection
8	white (wh)	Ch 2a

WARNING:
- **Emergency Stop Functions**
- Muting or bypassing the safety outputs will render the Emergency Stop function ineffective.
- If Cascade Input is used for an Emergency Stop function, do not mute or bypass the safety outputs (OSSDs) of the EZ-SCREEN. NFPA79 requires that the Emergency Stop function remain active at all times.

[16] Standard 8-pin M12 QD cordsets can also be used, although the pin numbers and wire colors must be verified.

© Banner Engineering Corp. All rights reserved.
www.bannerengineering.com

8.7.1 E-Stop Switch Requirements (Positive-Opening)

The E-stop switch must provide two contact pairs, which are closed when the switch is in the armed position. Once activated, the E-stop switch must open its contacts and return to the closed-contact position only after deliberate action (such as twisting, pulling, or unlocking).

The switch should be a positive-opening type, as described by IEC947-5-1. A mechanical force applied to such a button (or switch) is transmitted directly to the contacts, forcing them open. This ensures that the switch contacts open when the switch is activated.

NFPA 79 specifies the following additional requirements:

- Emergency Stop push buttons shall be located at each operator control station and at other operating stations where emergency shutdown shall be required.
- Stop and Emergency Stop push buttons shall be continuously operable from all control and operating stations where located.
- Actuators of Emergency Stop devices shall be colored red. The background immediately around the device actuator shall be colored yellow. The actuator of a push-button-operated device shall be of the palm or mushroom-head type.
- The Emergency Stop actuator shall be a self-latching type.

Some applications may have additional requirements. The user must comply with all relevant regulations.

WARNING: Connecting multiple e-stop switches

- When two or more e-stop switches are connected to the same EZ-SCREEN SLS receiver, the contacts of the e-stop switches must be connected together in series. This series combination is then wired to the respective EZ-SCREEN SLS receiver input.
- Never connect the contacts of multiple e-stop switches in parallel to the EZ-SCREEN SLS inputs; this defeats the switch contact monitoring ability of the EZ-SCREEN SLS light curtain, and creates an unsafe condition which could result in serious bodily injury or death.
- Also, when two or more e-stop switches are used, each switch must be individually actuated (engaged), then re-armed and the EZ-SCREEN SLS light curtain reset (if using latch mode). This allows the monitoring circuits to check each switch and its wiring to detect faults. Failure to test each switch individually in this manner could result in undetected faults and create an unsafe condition which could result in serious bodily injury or death.

WARNING:

- **Reset Routine Required**
- Allowing the machine to restart as soon as the e-stop switch is armed creates an unsafe condition that could result in serious injury or death.
- U.S. and international standards require that a reset routine be performed after returning the e-stop switch to its closed-contact position (when arming the e-stop switch). When automatic reset is used, establish an alternate means to require a reset routine after the e-stop switch is armed.

8.8 Interlock Switches in Cascaded Systems

The Cascade input may be used to monitor interlock safety gates or guards. Requirements vary widely for the level of control reliability or safety category (per ISO 13849-1) in the application of interlocked guards. While Banner Engineering recommends the highest level of safety in any application, the user is responsible to safely install, operate, and maintain each safety system, and comply with all relevant laws and regulations. Of the following applications, "Positive-Opening Interlocking Safety Switches" on page 75 meets or exceeds the requirements for OSHA/ANSI control reliability and Safety Category 4, per ISO 13849-1.

© Banner Engineering Corp. All rights reserved.
www.bannerengineering.com

WARNING:

- **The hazard must be accessible only through the sensing field**
- Incorrect system installation could result in serious injury or death.
- The installation of the EZ-SCREEN SLS must prevent any individual from reaching around, under, over or through the defined area and into the hazard without being detected.
- See OSHA CFR 1910.217, ANSI B11.19, and/or ISO 14119, ISO 14120 and ISO 13857 for information on determining safety distances and safe opening sizes for your guarding device. Mechanical barriers (for example, hard (fixed) guarding) or supplemental safeguarding might be required to comply with these requirements.

8.8.1 Interlock Guarding Requirements

The following general requirements and considerations apply to the installation of interlocked gates and guards for the purpose of safeguarding. Refer to the relevant regulations to be sure to comply with all necessary requirements.

Hazards guarded by the interlocked guard must be prevented from operating until the guard is closed. A Stop command must be issued to the guarded machine if the guard opens while the hazard is present. Closing the guard must not, by itself, initiate hazardous motion; a separate procedure must be required to initiate the motion. The safety switches must not be used as a mechanical or end-of-travel stop.

The guard must be located at an adequate distance from the danger zone (so the hazard has time to stop before the guard is opened sufficiently to provide access to the hazard), and it must open either laterally or away from the hazard, not into the safeguarded area. Depending on the application, an interlocked gate or door should not be able to close by itself and activate the interlocking circuitry. In addition, the installation must prevent personnel from reaching over, under, around, or through the guard to the hazard. Any openings in the guard must not allow access to the hazard (see ANSI B11.19 or the appropriate standard). The guard must be strong enough and designed to protect personnel and contain hazards within the guarded area, which may be ejected, dropped, or emitted by the machine.

The safety switches and actuators used with the cascaded system must be designed and installed so that they cannot be easily defeated. They must be mounted securely, so that their physical position cannot shift, using reliable fasteners that require a tool to remove. Mounting slots in the housings are for initial adjustment only; final mounting holes must be used for permanent location.

8.8.2 Positive-Opening Interlocking Safety Switches

Two individually mounted safety interlock switches are recommended for each guard to meet safety category 4, per ISO 13849-1, and must satisfy several requirements. Each switch must provide at minimum, one normally closed (N/C) electrically isolated contact to interface with the Cascade input.

The contacts must be of positive-opening design, with one or more normally closed contacts rated for safety. Positive-opening operation causes the switch to be forced open, without the use of springs, when the switch actuator is disengaged or moved from its home position. Mount the switches to move/disengage the actuator from its home position and open the normally closed contact when the guard opens.

© Banner Engineering Corp. All rights reserved.
www.bannerengineering.com

Figure 39. Monitoring two positive-opening interlocking safety switches

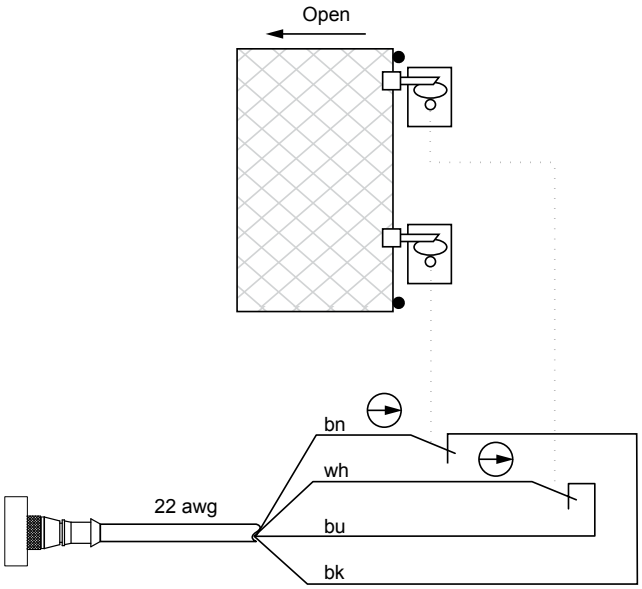

This application is considered to meet or exceed requirements for OSHA control reliability and safety categories 4 per ISO 13849-1.

QDE2R4-8..D Cable Pinout [17]		
Pin	**Color**	**Description**
1	brown (bn)	Ch 1a
2		No Connection
3		No Connection
4	Black (bk)	Ch 1b
5	Blue (bu)	Ch 2b
6		No Connection
7		No Connection
8	white (wh)	Ch 2a

8.8.3 Monitoring Series-Connected Positive-Opening Safety Switches

When monitoring two individually mounted safety switches (as shown in "Figure: Monitoring two positive-opening interlocking safety switches on page 76), a faulty switch will be detected if it fails to switch as the guard opens. In this case, the EZ-SCREEN SLS de-energizes its OSSD output and disables its reset function until the input requirements are met (i.e., the faulty switch is replaced). However, when a series of interlocking safety switches is monitored by the EZ-SCREEN SLS, the failure of one switch in the system may be masked or not detected at all.

[17] Standard 8-pin M12 QD cordsets can also be used, although the pin numbers and wire colors must be verified.

© Banner Engineering Corp. All rights reserved.
www.bannerengineering.com

Figure 40. Monitoring positive-opening safety switches on multiple gates.

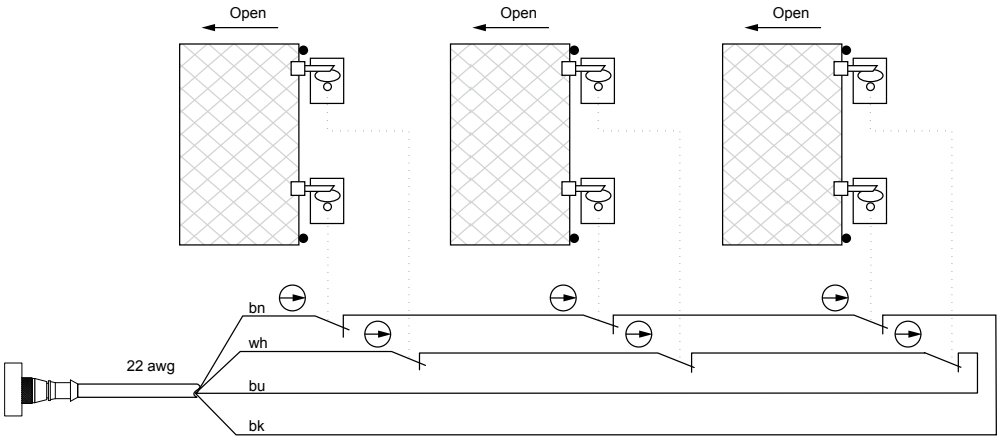

QDE2R4-8..D Cable Pinout [18]		
Pin	**Color**	**Description**
1	brown (bn)	Ch 1a
2		No Connection
3		No Connection
4	Black (bk)	Ch 1b
5	Blue (bu)	Ch 2b
6		No Connection
7		No Connection
8	white (wh)	Ch 2a

WARNING:

- **Connecting safety switches in series**
- Monitoring multiple guards with a series connection of multiple safety interlock switches is not a Safety Category 4 Application (per ISO 13849-1). A single failure can be masked or not detected at all. The loss of a safety stop signal or an inappropriate reset can lead to serious injury or death.
- When such a configuration is used, procedures must be performed regularly to verify proper operation of each switch. Correct all failures immediately (for example, immediately replace a failed switch).

Series-connected, positive-opening interlock switch circuits do not meet ISO 13849-1 Safety Category 4 and may not meet Control Reliability requirements because of the potential of an inappropriate reset or a potential loss of the safety stop signal. A multiple connection of this type should not be used in applications where loss of the safety stop signal or an inappropriate reset could lead to serious injury or death. The following two scenarios assume two positive-opening safety switches on each guard:

Masking of a failure. If a guard is opened but a switch fails to open, the redundant safety switch will open and cause the EZ-SCREEN SLS to de-energize its outputs. If the faulty guard is then closed, both Cascade input channels also close, but because one channel did not open, the EZ-SCREEN SLS will not reset.

However, if the faulty switch is not replaced and a second “good” guard is cycled (opening and then closing both of the cascade input channels), the EZ-SCREEN SLS considers the failure to be corrected. With the input requirements apparently satisfied, the EZ-SCREEN SLS allows a reset. This system is no longer redundant and, if the second switch fails, may result in an unsafe condition (i.e., the accumulation of faults results in the loss of the safety function).

Non-detection of a failure. If a good guard is opened, the EZ-SCREEN SLS de-energizes its outputs (a normal response). But if a faulty guard is then opened and closed before the good guard is re-closed, the failure on the faulty guard is not detected.

[18] Standard 8-pin M12 QD cordsets can also be used, although the pin numbers and wire colors must be verified.

© Banner Engineering Corp. All rights reserved.
www.bannerengineering.com

This system also is no longer redundant and may result in a loss of safety if the second safety switch fails to switch when needed.

The circuits in either scenario do not inherently comply with the safety standard requirements of detecting single faults and preventing the next cycle. In multiple-guard systems using series-connected positive-opening safety switches, it is important to periodically check the functional integrity of each interlocked guard individually.

Operators, maintenance personnel, and others associated with the operation of the machine must be trained to recognize such failures and be instructed to correct them immediately.

Open and close each guard separately while verifying that the EZ-SCREEN SLS outputs operate correctly throughout the check procedure. Follow each gate closure with a manual reset, if needed. If a contact set fails, the EZ-SCREEN SLS will not enable its reset function. If the EZ-SCREEN SLS does not reset, a switch may have failed; that switch must be immediately replaced.

This check must be performed and all faults must be cleared, at a minimum, during periodic checkouts. If the application can not exclude these types of failures and such a failure could result in serious injury or death, then the safety switches must not be connected in series.

© Banner Engineering Corp. All rights reserved.

Chapter Contents

9.1 Troubleshooting and Lockout Conditions 79
9.2 Recovery Procedures 79
9.3 Test Mode for 5-Pin Emitters 82
9.4 Electrical and Optical Noise 83

Chapter 9 Troubleshooting

9.1 Troubleshooting and Lockout Conditions

Evaluate status indicators per "Status Indicators" on page 52.

A Lockout condition causes all of the EZ-SCREEN SLS OSSD outputs to turn or remain OFF, sending a stop signal to the guarded machine. Each sensor provides diagnostic error codes to assist in the identification of the cause(s) of lockouts (see "Receiver Error Codes" on page 80 and "Emitter Error Codes" on page 82 or the Diagnostic Error Code label supplied in the documentation pack).

The System provides easy methods for determining operating problems. A Lockout condition is indicated by the following:

Receiver		Emitter	
Reset indicator	OFF	**Status indicator**	Flashing Red
Status indicator	Flashing Red	**Diagnostic Display**	Error code (flashing)
Zone indicators	OFF		
Diagnostic display	Error code (flashing)		

9.2 Recovery Procedures

To recover from a Lockout condition, correct all errors and perform a single sensor reset sequence as described below.

9.2.1 Emitter and Receiver Reset

Receiver Reset— Close the remote reset switch for 0.25 to 2 seconds and then open the switch (per "Reset Procedures" on page 51), or power the sensor down, wait a second or two, then power it up.

> **NOTE:** If the receiver is set for latch output, a manual reset using a remote switch, as described in "Reset Procedures" on page 51, is required to resume full operation.

Emitter Reset— Power the sensor down, wait a second or two, and then power it up.

WARNING:

- **Lockouts and power failures indicate a problem**
- Attempts to continue to operate machinery by bypassing the Banner Engineering Corp. device or other safeguards is dangerous and could result in serious injury or death.
- A Qualified Person[19] must immediately investigate the problem.

[19] A person who, by possession of a recognized degree or certificate of professional training, or who, by extensive knowledge, training and experience, has successfully demonstrated the ability to solve problems relating to the subject matter and work.

© Banner Engineering Corp. All rights reserved.
www.bannerengineering.com

WARNING:

- **Shut down the machinery before servicing**
- Servicing the Banner Engineering Corp. device or system while the hazardous machinery is operational could result in serious injury or death.
- The machinery to which the Banner Engineering Corp. device or system is connected must not be operating at any time during major service or maintenance. This might require lockout/tagout procedures (refer to OSHA1910.147, ANSI Z244-1, ISO 14118 or the applicable standard for controlling hazardous energy).

9.2.2 Advanced Diagnostics

In addition to the standard error codes, the EZ-SCREEN SLS can display advanced diagnostic codes for factory troubleshooting and repair functions. These codes are generally not intended for field troubleshooting by the EZ-SCREEN SLS user.

These advanced codes have three digits (alternating “Axx”/“Bxx”, where “xx” are two alpha-numeric characters). To display these codes:

- Hold the Reset input high (+24 V DC), or
- Hold the Invert Display button down for five seconds during a lockout condition.

If the advanced diagnostic codes are inadvertently displayed, hold the Invert Display button down for 5 seconds to return to the standard error code display.

9.2.3 Receiver Error Codes

Diagnostic Display	Error Descriptions and Causes	Appropriate Action
	**Output Error** This error is caused by: • One or both outputs being shorted to a power supply (high or low) • By shorting OSSD 1 to OSSD 2 • By an overload (greater than 0.5A)	Disconnect the OSSD loads and reset the receiver. • If the error clears, the problem is in the OSSD load(s) or in the load wiring. • If the error continues with no load connected, replace the receiver.
	**Reset Input Error** This error occurs when the Reset switch is closed (or the wiring is shorted to +24V) during power-up.	Verify that the reset switch is in the open position. Reset the receiver per "Emitter and Receiver Reset" on page 79. • If the error remains, disconnect the reset wire at pin 8; cycle the power. • If the error clears, the problem is in the reset switch or in the wiring. • If the error persists, replace the receiver.
	**EDM Input Error** This error can occur for the following reasons: • EDM wiring is incorrect • No connection to EDM connections • Both EDM inputs fail to respond within 250 ms of each other • Excessive noise on EDM inputs • Loose QD connection(s)	Verify that the EDM wiring is correct for the EDM type configured (see "Machine Primary Control Elements (MPCE) and External Device Monitoring (EDM) Input" on page 41). • If the error continues, remove power to the guarded machine, disconnect the OSSD loads, disconnect the EDM input signals, configure EDM for No Monitoring (see "Machine Primary Control Elements (MPCE) and External Device Monitoring (EDM) Input" on page 41), and conduct the Initial Checkout procedure in "Initial Checkout Procedure" on page 33. • If the error clears, the problem is in the external device contacts or wiring, or is a response-time problem of the external devices. Verify that the EDM wiring is correct and that the external devices meet the requirements described in "Machine Primary Control Elements (MPCE) and External Device Monitoring (EDM) Input" on page 41. • If the error continues, check for noise on the EDM inputs (see "Electrical and Optical Noise" on page 83). If the error persists, replace the receiver.

Continued on page 81

© Banner Engineering Corp. All rights reserved.
www.bannerengineering.com

Continued from page 80

Diagnostic Display	Error Descriptions and Causes	Appropriate Action
	**Receiver Error** This error occurs due to excessive electrical noise or an internal failure.	Reset the receiver per "Emitter and Receiver Reset" on page 79. • If the error clears, perform a Daily Checkout procedure (per EZ-SCREEN Checkout Procedures: Shift and Daily Checkout Procedure; Daily Checkout Card). If the System checks out, resume operation. If the System fails, replace the receiver. • If the error continues, check the ground connection (pin 7). • If the sensor has a good earth ground connection to pin 7, perform the Initial Checkout procedure (per "Initial Checkout Procedure" on page 33). • If the error clears, check the external connections and configuration settings. • If the error persists, replace the receiver.
	**DIP Switch Error** This error can be caused by incorrect DIP switch settings or by changes to the DIP switch settings when the system is ON.	• Verify that the DIP switch settings are valid. Make any corrections necessary and perform a receiver reset. • If the error occurred due to a change of the DIP switch settings while the System was in Run mode, verify the switch settings and perform a receiver reset to resume operation with the new switch settings and modified System configuration. • If the error continues, replace the receiver.
	**EDM 1 Error** This error can occur when the EDM 1 input signal fails to respond within 250 ms of the OSSDs changing state (ON to OFF).	Verify that the EDM wiring is correct and that the external devices meet the requirements described in "Machine Primary Control Elements (MPCE) and External Device Monitoring (EDM) Input" on page 41. • If the error continues, remove power to the guarded machine, disconnect the OSSD loads, disconnect the EDM input signals, configure EDM for No Monitoring (per "Machine Primary Control Elements (MPCE) and External Device Monitoring (EDM) Input" on page 41), and conduct the Initial Checkout procedure in "Initial Checkout Procedure" on page 33. • If the error clears, the problem is in the External Device contacts or wiring, or is a response-time problem of the external devices. Verify that the EDM wiring is correct and that the external devices meet the requirements described in "Machine Primary Control Elements (MPCE) and External Device Monitoring (EDM) Input" on page 41. • If the error continues, check for noise on the EDM inputs (see "Electrical and Optical Noise" on page 83).
	**EDM 2 Error** The EDM 2 configuration is not valid.	• Verify that the EDM wiring is correct and that the external devices meet the requirements described in "Machine Primary Control Elements (MPCE) and External Device Monitoring (EDM) Input" on page 41. • If the error continues, remove power to the guarded machine, disconnect the OSSD loads, disconnect the EDM input signals, configure EDM for No Monitoring (per "Machine Primary Control Elements (MPCE) and External Device Monitoring (EDM) Input" on page 41), and conduct the Initial Checkout procedure (see "Initial Checkout Procedure" on page 33). • If the error clears, the problem is in the External Device contacts or wiring, or is a response-time problem of the external devices. Verify that the EDM wiring is correct and that the external devices meet the requirements described in "Machine Primary Control Elements (MPCE) and External Device Monitoring (EDM) Input" on page 41. • If the error continues, check for noise on the EDM inputs (see "Electrical and Optical Noise" on page 83).
	**Fixed Blanking Error** This error occurs when beam(s) that have been blanked (programmed to ignore a fixed object) become clear when the object is removed or moved.	• Reposition the object and perform a key reset (or cycle power). • Re-program (teach) the fixed blanked object(s), see "Fixed Blanking" on page 36.
	**Programming Timeout Error** This error occurs when the Fixed Blanking programming mode (teach) exceeds the ten-minute limit.	Re-program (teach) the fixed blanked object(s), see "Fixed Blanking" on page 36.

Continued on page 82

© Banner Engineering Corp. All rights reserved.
www.bannerengineering.com

Continued from page 81

Diagnostic Display	Error Descriptions and Causes	Appropriate Action
	**Cascade Configuration Error** This error occurs when the configuration sequence is incorrectly followed, receiver(s) 2, 3 or 4 are configured, or receiver 1 is moved to a different position in the cascade.	• The CSSI Input channel(s) are shorted together or to another source of power or ground. • Configure ONLY the first receiver in the cascade (connected to the machine interface). All other receivers must be set for 2-Ch. EDM (E2), reduced resolution (RR) off, and Trip Output (T), see "Cascaded Sensor Configuration Settings" on page 71. • Re-configure the first receiver to adapt the system to changes or replacement of other receivers, see "Cascaded Sensor Configuration Settings" on page 71. In a cascaded system, all receivers are connected together and all emitters are connected together.
	**Excessive Noise Error – Reset Interface** This error occurs due to excessive levels of electrical noise.	• Perform a reset per "Reset Procedures" on page 51. • If the error clears, perform a Daily Checkout procedure (per "Shift/Daily Checkout" on page 62) and if OK, resume operation. If the System fails the Daily Checkout procedure, replace the receiver. • If the error continues, check the ground connection (pin 7). • If the sensor has a good earth ground connection to pin 7, perform the Initial Checkout procedure ("Initial Checkout Procedure" on page 33). • If the error clears, check for sources of electrical noise (see "Electrical and Optical Noise" on page 83). • If the error continues, replace the receiver.
	**Excessive Noise Error – EDM Interface** This error occurs due to excessive levels of electrical noise.	
	**Excessive Noise Error – Cascade Input** This error occurs due to excessive levels of electrical noise.	
 (flashing)	**Cascade Input Simultaneity** Operation of channels A and B mismatch > 3 seconds.	• Check the operation of Channel A and Channel B of cascade input. • Cycle power or cycle the input. See "Emergency Stop Buttons and Rope/Cable Pulls" on page 73 and "Interlock Switches in Cascaded Systems" on page 74.

9.2.4 Emitter Error Codes

The emitter has only a 1-digit display. Two-digit codes are displayed sequentially.

Diagnostic Display	Error Description	Cause of Error and Appropriate Action
	**Emitter Error** This error can occur either due to excessive electrical noise or due to an internal failure.	Reset the emitter per "Reset Procedures" on page 51. • If the error clears, perform the daily checkout procedure (per EZ-SCREEN Checkout Procedures: Shift and Daily Checkout Procedure; Daily Checkout Card). If the System checks out, resume operation. If the System fails, replace the emitter. • If the error continues, check the ground connection (see "Wiring Diagrams" on page 44). • If the sensor has a good earth ground connection, check for electrical noise (see "Electrical and Optical Noise" on page 83). • If the error persists, replace the emitter.
	**Excessive Noise Error** This error can occur due to excessive electrical noise.	Reset the emitter per "Reset Procedures" on page 51. • If the error clears, perform the daily checkout procedure (per EZ-SCREEN Checkout Procedures: Shift and Daily Checkout Procedure; Daily Checkout Card). If the System checks out, resume operation. If the System fails, replace the emitter. • If the error continues, check the ground connection (see "Wiring Diagrams" on page 44). • If the sensor has a good earth ground connection, check for electrical noise (see "Electrical and Optical Noise" on page 83). • If the error persists, replace the emitter.

9.3 Test Mode for 5-Pin Emitters

If the System cannot be aligned or it will not go to a Green/Clear condition, the emitter's TEST input may be open. When this occurs, the receiver Reset indicator is amber, all Zone indicators will be red and the system Status LED will be red. The 3-digit display shows a numerical value equal to one less than the total number of beams. For example, if an array has 50 beams total, the display would show 49 and the emitter's Status indicator flashes green. See "Status Indicators" on page 52 and "Troubleshooting" on page 79. (On a 10-beam system, Zone 1 indicator is green and all others are red.)

© Banner Engineering Corp. All rights reserved.
www.bannerengineering.com

Opening a switch or relay contacts connected to the TEST1 and TEST2 connections of the emitter, or supplying a voltage of less than 3 V dc to TEST1 only, simulates a Blocked condition, for testing purposes.

To verify proper operation, measure the voltage between TEST1 (pin 4, black) and DC COM (pin 3, blue) of the emitter:

- If the voltage is 10 V DC to 30 V DC, the emitter should be in Run mode and beam scanning should be occurring. If the emitter is not in Run mode:
  - Check the +24 V DC (pin 1, brown) to verify proper supply voltage. If the supply voltage is not within the rated supply voltage specifications, correct the supply voltage and recheck the emitter operation.
  - If the supply voltage is correct, Test1 is 10 V DC to 30 V DC, and the emitter does not operate properly (RUN mode with beam scanning), replace the emitter.
- If the voltage is less than 3 V DC, the emitter should be in Test mode and no scanning should be occurring. If the emitter is not in Test mode, replace the emitter.

9.4 Electrical and Optical Noise

The EZ-SCREEN SLS is designed and manufactured to be highly resistant to electrical and optical noise and to operate reliably in industrial settings. However, serious electrical and/or optical noise may cause a random Trip. In very extreme electrical noise cases, a Lockout is possible. To minimize the effects of transitory noise, the EZ-SCREEN SLS responds to noise only if the noise is detected on multiple consecutive scans.

If random nuisance Trips or lockouts occur, check the following:

- Poor connection between the sensor and earth ground
- Optical interference from adjacent light screens or other photoelectric sensors
- Sensor input or output wires routed too close to noisy wiring

9.4.1 Check for Sources of Electrical Noise

It is important that the light screen sensors have a good earth ground. Without this, the System can act like an antenna and random Trips and Lockouts can occur.

All EZ-SCREEN SLS wiring is low voltage; running these wires alongside power wires, motor/servo wires, or other high-voltage wiring can inject noise into the EZ-SCREEN SLS System. It is good wiring practice (and may be required by code) to isolate EZ-SCREEN SLS wires from high-voltage wires.

1. Use the Banner model BT-1 Beam Tracker Alignment Aid (see "Alignment Aids" on page 93) to detect electrical transient spikes and surges.
2. Cover the lens of the BT-1 with electrical tape to block optical light from entering the receiver lens.
3. Press the RCV button on the BT-1 and position the Beam Tracker on the wires going to the EZ-SCREEN SLS or any other nearby wires.
4. Install proper transient suppression across the load to reduce the noise.

9.4.2 Check for Optical Noise Sources

Follow these steps to check for optical noise sources.

1. Turn off the emitter, completely block the emitter, or open the Test input.
2. Use a Banner BT-1 Beam Tracker (see "Alignment Aids" on page 93) to check for light at the receiver.
3. Press the RCV button on the BT-1 and move it across the full length of the receiver’s sensing window. If the BT-1’s indicator lights, check for emitted light from other sources (other safety light screens, grids or points, or standard photoelectric sensors).

© Banner Engineering Corp. All rights reserved.
www.bannerengineering.com

Chapter Contents

10.1 Cordsets 84
10.2 Interface Modules 87
10.3 Contactors 88
10.4 Safety Controllers 88
10.5 Muting Modules 88
10.6 AC Boxes 88
10.7 Remote Reset Switch 89
10.8 Lens Shields 89
10.9 Tubular Enclosures 89
10.10 MSA Series Stands 90
10.11 SSM Series Corner Mirrors 90
10.12 Mounting Brackets 91
10.13 Alignment Aids 93
10.14 EZ-LIGHT for EZ-SCREEN 93

Chapter 10 Accessories

10.1 Cordsets

Machine interface cordsets provide power to the first emitter/receiver pair. Sensor interconnect cables provide power to subsequent emitters and receivers in the cascade.

10.1.1 Single-Ended (Machine Interface) Cordsets (One Cable for Each Emitter and Receiver)

Overmold and cordsets are PVC-jacketed. Cordsets are unterminated on one end to interface with the guarded machine.

For 8-pin Emitters and Receivers

8-Pin Single-Ended M12 Female Cordsets					
Model	**Length**	**Style**	**Dimensions**	**Pinout (Female)**	
QDE-815D	4.57 m (15 ft)	Straight	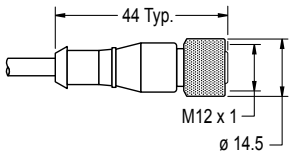	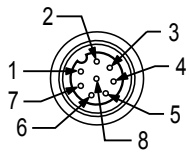	
QDE-825D	7.62 m (25 ft)				
QDE-850D	15.24 m (50 ft)				
QDE-875D	22.86 m (75 ft)				
QDE-8100D	30.48 m (100 ft)			1 = Brown 2 = Or/Bk 3 = Orange 4 = White	5 = Black 6 = Blue 7 = Gn/Ye 8 = Violet

For 8-pin Emitters and Receivers 8-pin Systems require two 8-pin QD cables. Only pins 1, 6, and 7 are connected on 8-pin emitters. The European M12 Specification pin assignment and color codes are listed as a customer courtesy. The user must verify suitability of these cables for each application.					
Banner Cable Pinout/Color Code			**European M12 Specification**		
Pin	**Color**	**Function**	**Pin**	**Color**	**Function**
1	Brown	+ 24 V DC	1	White	+ 24 V DC
2	Orange/Black	EDM #2 (Aux)	2	Brown	EDM #2 (Aux)
3	Orange	EDM #1	3	Green	EDM #1
4	White	OSSD #2	4	Yellow	OSSD #2
5	Black	OSSD #1	5	Gray	OSSD #1
6	Blue	0 V DC	6	Pink	0 V DC
7	Green/Yellow	Gnd/Chassis	7	Blue	Ground/Chassis
8	Violet	Reset	8	Red	Reset

For 5-pin Emitters

© Banner Engineering Corp. All rights reserved.
www.bannerengineering.com

5-Pin Single-Ended M12 Female Cordsets with Green/Yellow Ground Wire				
Model	**Length**	**Style**	**Dimensions**	**Pinout (Female)**
QDE-515D	4.57 m (15 ft)	Straight	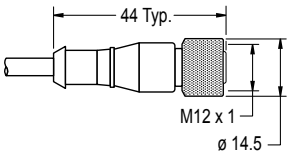	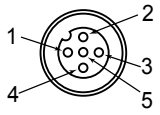 1 = Brown 2 = White 3 = Blue 4 = Black 5 = Green/Yellow
QDE-525D	7.62 m (25 ft)			
QDE-550D	15.2 m (49.9 ft)			
QDE-575D	22.9 m (75 ft)			
QDE-5100D	30.5 m (100 ft)			

For 5-pin Emitters and Receivers 5-pin EZ-SCREEN emitter, model numbers SLSE..-..Q5 with Test function. One 5-pin and one 8-pin QD cable required for complete system. The European M12 Specification pin assignment and color codes are listed as a customer courtesy. The user must verify suitability of these cables for each application.					
Banner Cable Pinout/Color Code			**European M12 Specification**		
Pin	**Color**	**Function**	**Pin**	**Color**	**Function**
1	Brown	+ 24 V DC	1	Brown	+ 24 V DC
2	White	Test #2	2	White	Test #2
3	Blue	0 V DC	3	Blue	0 V DC
4	Black	Test #1	4	Black	Test #1
5	Green/Yellow	Gnd/Chassis	5	Shield	Gnd/Chassis

10.1.2 Double-Ended (Sensor Interconnect) Cordsets

Double-ended cables are generally used to interconnect multiple emitters (8-pin or 5-pin) or receivers (8-pin) within a cascaded system. They are also useful for extending either the branch or trunk cables of a model CSB splitter cordset. When combining cables in a multiple-light-screen cascade, refer to "Determining Interconnect Cable Lengths" on page 66 for maximum cable lengths.

8-Pin Double-Ended M12 Female to M12 Male Cordsets					
Model (8-pin/8-pin)	**Length**	**Style**	**Dimensions**	**Pinout**	
DEE2R-81D	0.3 m (1 ft)	Female Straight/ Male Straight	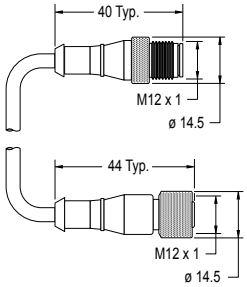	Female 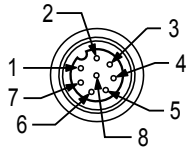 Male 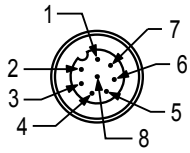	
DEE2R-83D	0.91 m (3 ft)				
DEE2R-88D	2.44 m (8 ft)				
DEE2R-815D	4.57 m (15 ft)				
DEE2R-825D	7.62 m (25 ft)				
DEE2R-850D	15.24 m (50 ft)				
DEE2R-875D	22.86 m (75 ft)				
DEE2R-8100D	30.48 m (100 ft)			1 = Brown 2 = Orange/Black 3 = Orange 4 = White	5 = Black 6 = Blue 7 = Green/Yellow 8 = Violet

© Banner Engineering Corp. All rights reserved.
www.bannerengineering.com

5-Pin Double-Ended M12 Female to M12 Male Cordsets					
Model	**Length**	**Style**	**Dimensions**	**Pinout (Male)**	**Pinout (Female)**
DEE2R-51D	0.3 m (1 ft)	Female Straight/ Male Straight	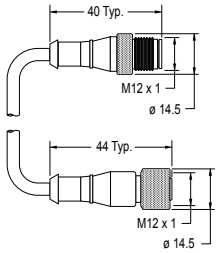	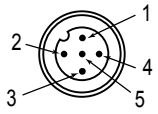	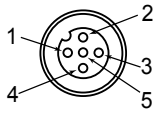
DEE2R-53D	0.91 m (3 ft)				
DEE2R-58D	2.44 m (8 ft)				
DEE2R-515D	4.57 m (15 ft)				
DEE2R-525D	7.62 m (25 ft)				
DEE2R-550D	15.2 m (50 ft)			1 = Brown 2 = White 3 = Blue	4 = Black 5 = Green/ Yellow
DEE2R-575D	22.9 m (75 ft)				
DEE2R-5100D	30.5 m (100 ft)				

10.1.3 Splitter Cordsets

Model CSB splitter cordsets allow easy interconnection between an EZ-SCREEN 8-pin receiver and its 8-pin emitter, providing a single “homerun” cable for the optional “swapable” wiring. The model DEE2R-.. double-ended cables may be used to extend the lengths of the QD trunk, branch #1, or branch #2. (Branch #1 and branch #2 cable sections are 300 mm/1 ft long.) The model QDE-8..D single-ended cables may be used to extend the QD trunk for cut-to-length applications.

8-Pin M12 Female Branch to Male Trunk Flat Junction Splitter Cordsets			
Model	**Trunk (Male)**	**Branches (Female)**	**Pinout**
CSB-M1280M1280	No trunk	No branches	Male 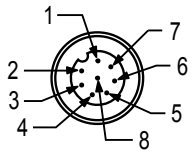
CSB-M1281M1281	0.3 m (1 ft)	2 x 0.3 m (1 ft)	
CSB-M1288M1281	2.44 m (8 ft)		
CSB-M12815M1281	4.57 m (15 ft)		
CSB-M12825M1281	7.62 m (25 ft)		
CSB-UNT825M1281	7.62 m (25 ft) Unterminated		
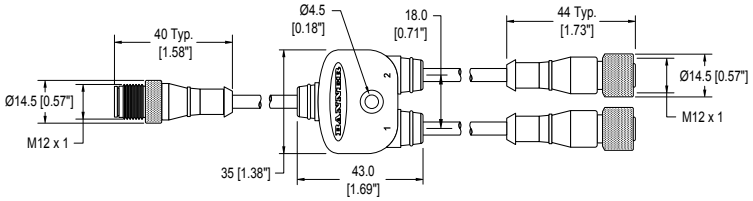			Female 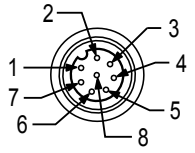 1 = Brown 2 = Or/Bk 3 = Orange 4 = White 5 = Black 6 = Blue 7 = Gn/Ye 8 = Violet

10.1.4 Bulkhead Connector

Connector for panel connection of EZ-SCREEN SLS component cables.

Model	Connection	Dimensions
PMEF-810D	8-pin M12 female connector 3 m (10 ft) wires, cut to length (Banner color code); 22 AWG/0.33 mm²	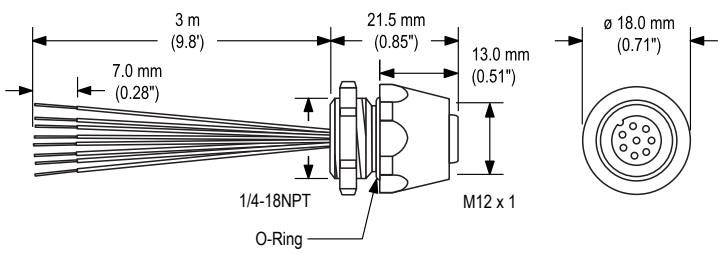

© Banner Engineering Corp. All rights reserved.
www.bannerengineering.com

10.1.5 Cordsets for Connecting Contact Devices

The following are cordsets for connecting to contact devices (such as e-stops or interlocks) to cascade a series of receivers.

8-Pin Single-Ended M12 Male Cordsets					
Model[20]	Length	Style	Dimensions	Pinout (Male)	
QDE2R4-815D	4.57 m (15 ft)	Straight	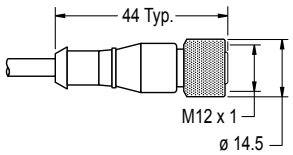	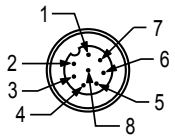	
QDE2R4-825D	7.62 m (25 ft)				
QDE2R4-850D	15.2 m (49.87 ft)			1 = Brown 2 = Not Used 3 = Not Used 4 = Black	5 = Blue 6 = Not Used 7 = Not Used 8 = White

Table 10. QDE2R4-8..D cordset pinouts

Pin	Color	Description for the EZ-SCREEN SLS 14/30mm Models
1	Brown (bn)	Ch 1a
2		No Connection
3		No Connection
4	Black (bk)	Ch 1b
5	Blue (bu)	Ch 2b
6		No Connection
7		No Connection
8	White (wh)	Ch 2a

10.1.6 DEE8-xxD Adapter M12 QD Cordsets

Used to convert the 8-pin M12 QD from the EZ-SCREEN SLS to a 5-pin female M12 QD for connection to a safety BUS gateway/node, a “smart” self-monitored safety module, safety controller, or safety PLC. Overmold and cables are PVC-jacketed.

DEE8-4..D cordsets do not have the pin 5 GND/chassis connection. GND/chassis connection should be made via the mounting hardware.

Model	Length	Wire	Pinout
DEE8-41D	0.3 m (1 ft)	4-conductor cable, 22 AWG/ 0.33 mm²	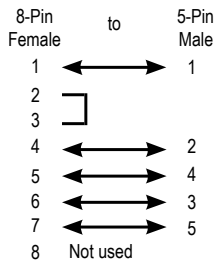
DEE8-51D	0.3 m (1 ft)	5-conductor cable, 22 AWG/ 0.33 mm²	

10.2 Interface Modules

Interface modules provide forced-guided, mechanically-linked relay (safety) outputs for the EZ-SCREEN SLS System See the referenced Banner datasheets for more information.

[20] Standard cordsets are yellow PVC with black overmold. For black PVC and overmold, add suffix B to model number (example, QDE2R4-815DB)

© Banner Engineering Corp. All rights reserved.
www.bannerengineering.com

Model	Description	Datasheet
IM-T-9A	Interface module, 3 normally open (N.O.) redundant-output 6 amp contacts, removable screw terminals	62822
IM-T-11A	Interface module, 2 normally open (N.O.) redundant-output 6 amp contacts, plus 1 normally closed (N.C.) auxiliary contact, removable screw terminals	
SR-IM-9A	Interface module, 3 normally open (N.O.) redundant-output 6 amp contacts, spring clamp terminals	208873
SR-IM-11A	Interface module, 2 normally open (N.O.) redundant-output 6 amp contacts, plus 1 normally closed (N.C.) auxiliary contact, spring clamp terminals	

10.3 Contactors

The normally closed contacts are used in an external device monitoring (EDM) circuit. If used, two contactors per EZ-SCREEN SLS System are required. See datasheet p/n 111881 for additional options and more information.

Model	Description
11-BG00-31-D-024	10 amp positive-guided contactor, 3 normally open (N.O.) and 1 normally closed (N.C.)
BF1801L024	18 amp positive-guided contactor, 3 normally open (N.O.) and 1 normally closed (N.C.) (N.C. contact rated at 10 amps)

10.4 Safety Controllers

Safety Controllers provide a fully configurable, software-based safety logic solution for monitoring safety and non-safety devices.

For additional models and XS26 expansion modules, see instruction manual p/n 174868.

Table 11. Safety controller models

Non-Expandable Models	Expandable Models	Description
SC26-2	**XS26-2**	26 convertible I/O and 2 redundant solid-state safety outputs
SC26-2d	**XS26-2d**	26 convertible I/O and 2 redundant solid-state safety outputs with display
SC26-2e	**XS26-2e**	26 convertible I/O and 2 redundant solid-state safety outputs with Ethernet
SC26-2de	**XS26-2de**	26 convertible I/O and 2 redundant solid-state safety outputs with display and Ethernet
SC10-2roe		10 inputs, 2 redundant relay safety outputs (3 contacts each) (ISD and Ethernet compatible)
	XS26-ISDd	26 inputs, 2 redundant solid-state safety outputs with display, Ethernet, and 8 ISD channels

10.5 Muting Modules

Model	Mounting	Description
MMD-TA-11B	DIN-mount Muting module	2 N.O. safety outputs (6 amps), 2 or 4 muting inputs, SSI, override input; IP20; terminal connections
MMD-TA-12B		2 OSSD outputs, 2 or 4 muting inputs, SSI, override input; IP20; terminal connections

10.6 AC Boxes

AC power supply for use with EZ-SCREEN SLS emitters and/or receivers. Models **EZAC-R..** can be interfaced with up to three receivers or two cascaded emitter/receiver pairs; models **EZAC-E..** can power up to four emitters. Box supplies +24 V DC power at 0.7 amps (16.8 W max. power); accepts input voltages from 100 to 250 V AC (50 to 60 Hz); IP65 metal housing. Models are available with external device monitoring (EDM); key reset switch on **EZAC-R..** models (Emitter/Receiver models). See datasheet p/n 120321 for more information.

© Banner Engineering Corp. All rights reserved.
www.bannerengineering.com

Emitter/Receiver Boxes					
Model	**Outputs**	**EDM**	**Emitter/Receiver Connection**	**AC Power Connection**	**Output and EDM Connections**
EZAC-R9-QE8	3 N.O.	Selectable 1- or 2-Channel or no EDM	8-Pin M12 QD	Hard-wired	Hard-wired
EZAC-R11-QE8	2 N.O., 1 N.C.				
EZAC-R15A-QE8-QS83	1 N.O. + 1 SPDT (Form C)	1-Channel		3-pin 7/8 in-16UNF QD	8-pin 7/8 in-16UNF QD
EZAC-R8N-QE8-QS53	1 N.O., 1 N.C.	Power Monitoring		3-pin 7/8 in-16UNF QD	5-pin 7/8 in-16UNF QD
EZAC-R10N-QE8-QS53	2 N.O.				

Emitter-Only Boxes			
Model	**For Emitter Models**	**Emitter Connection**	**AC Power Connection**
EZAC-E-QE8-QS3	SLPE..-..Q8 (without Test input)	8-Pin M12 QD	3-Pin 7/8 in-16UNF QD

10.7 Remote Reset Switch

Model	Description
EZA-RR-1	External normally open reset switch with 8-pin M12 quick disconnect fitting; can be interconnected using cordset models QDE-8..D, DEE2R-8..D, or CSB-..M1281.

10.8 Lens Shields

Adhesive-Backed Model[21]	Snap-On Model[22]	Sensor Defined Area[23]	
EZS-150	**EZSS-150**	150 mm (5.9 in)	
EZS-300	**EZSS-300**	300 mm (11.8 in)	
EZS-450	**EZSS-450**	450 mm (17.7 in)	
EZS-600	**EZSS-600**	600 mm (23.6 in)	
EZS-750	**EZSS-750**	750 mm (29.5 in)	
EZS-900	**EZSS-900**	900 mm (35.4 in)	
EZS-1050	**EZSS-1050**	1050 mm (41.3 in)	
EZS-1200	**EZSS-1200**	1200 mm (47.2 in)	
EZS-1350	**EZSS-1350**	1350 mm (53.1 in)	
EZS-1500	**EZSS-1500**	1500 mm (59.1 in)	
EZS-1650	**EZSS-1650**	1650 mm (65.0 in)	
EZS-1800	**EZSS-1800**	1800 mm (70.9 in)	
The total sensing range decreases by approximately 10% per shield.			

10.9 Tubular Enclosures

When using a tubular enclosure with an MSA series stand (datasheet p/n 117107), the EZA-MBK-2 adapter bracket is required. Explosion-proof enclosures are also available.

[21] Polycarbonate shield guards against weld splatter and weld flash with an adhesive-backed neoprene gasket (see data sheet p/n 61960).
[22] Copolyester shield provides heavy-duty, impact-resistant protection from many types of cutting fluids (see data sheet p/n 127944).
[23] Contact Banner Engineering for lens shield availability for longer sensor lengths.

© Banner Engineering Corp. All rights reserved.
www.bannerengineering.com

Enclosure Model[24]	Enclosure Height	For EZ-SCREEN Models	
EZA-TE-150	439 mm (17.3 in)	SLS..-150	
EZA-TE-300	541 mm (21.3 in)	SLS..-300	
EZA-TE-450	744 mm (29.3 in)	SLS..-450	
EZA-TE-600	846 mm (33.3 in)	SLS..-600	
EZA-TE-750	1024 mm (40.3 in)	SLS..-750	
EZA-TE-900	1151 mm (45.3 in)	SLS..-900	
EZA-TE-1050	1354 mm (53.3 in)	SLS..-1050	
EZA-TE-1200	1455 mm (57.3 in)	SLS..-1200	
EZA-TE-1350	1608 mm (63.3 in)	SLS..-1350	
EZA-TE-1500	1760 mm (69.3 in)	SLS..-1500	
EZA-TE-1650	1913 mm (75.3 in)	SLS..-1650	
EZA-TE-1800	2065 mm (81.3 in)	SLS..-1800	

10.10 MSA Series Stands

- Provides mounting T-slots with 20 mm dimension between slots
- Base included. Available without a base by adding the suffix **NB** to the model number (for example, **MSA-S42-1NB**)

Stand Model	Pole Height	Useable Stand Height	Overall Stand Height	
MSA-S24-1	610 mm (24 in)	483 mm (19 in)	616 mm (24.25 in)	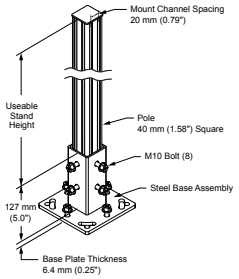
MSA-S42-1	1065 mm (42 in)	938 mm (37 in)	1071 mm (42.2 in)	
MSA-S66-1	1676 mm (66 in)	1549 mm (61 in)	1682 mm (66.25 in)	
MSA-S84-1	2134 mm (84 in)	2007 mm (79 in)	2140 mm (84.25 in)	
MSA-S105-1	2667 mm (105 in)	2540 mm (100 in)	2673 mm (105.25 in)	

10.11 SSM Series Corner Mirrors

- Robust for heavy-duty applications.
- Extra wide for use with long-range optical safety systems.
- Rear-surface glass mirrors are rated at 85% efficiency. The total sensing range decreases by approximately 8% per mirror. See mirror datasheet p/n 61934 or www.bannerengineering.com for further information.
- To order the stainless steel reflective surface models, add the suffix **-S** (for example, **SSM-375-S**); range reduction for these models is approximately 30% per mirror. See datasheet p/n 67200.
- Robust construction, two mounting brackets and hardware included.
- In addition to the included SMA-MBK-1 brackets, an EZA-MBK-2 adapter bracket kit is required for use with MSA Series stands; refer to the mounting bracket accessories list.
- Brackets may be inverted from the positions shown, decreasing dimension L1 by 58 mm (2.3 in).

[24] Contact Banner Engineering for enclosure availability for longer sensor lengths.

© Banner Engineering Corp. All rights reserved.
www.bannerengineering.com

Mirror Model	Reflective Area Height (Y)	Mounting Height (L1)[25]	Overall Height (L2)	
SSM-100-S	100 mm (3.9 in)	211 mm (8.3 in)	178 mm (7.0 in)	
SSM-150-S	150 mm (5.9 in)	261 mm (10.3 in)	228 mm (9.0 in)	
SSM-200-S	200 mm (7.9 in)	311 mm (12.2 in)	278 mm (10.9 in)	
SSM-250-S	250 mm (9.8 in)	361 mm (14.2 in)	328 mm (12.9 in)	
SSM-375-S	375 mm (14.8 in)	486 mm (19.1 in)	453 mm (17.8 in)	
SSM-475-S	475 mm (18.7 in)	586 mm (23.1 in)	553 mm (21.8 in)	
SSM-550-S	550 mm (21.7 in)	661 mm (26.0 in)	628 mm (24.7 in)	
SSM-675-S	675 mm (26.6 in)	786 mm (31.0 in)	753 mm (29.6 in)	
SSM-825-S	825 mm (32.5 in)	936 mm (36.9 in)	903 mm (35.6 in)	
SSM-875-S	875 mm (34.4 in)	986 mm (38.8 in)	953 mm (37.5 in)	
SSM-975-S	975 mm (38.4 in)	1086 mm (42.8 in)	1053 mm (41.5 in)	
SSM-1100-S	1100 mm (43.3 in)	1211 mm (47.7 in)	1178 mm (46.4 in)	
SSM-1175-S	1175 mm (46.3 in)	1286 mm (50.6 in)	1253 mm (49.3 in)	
SSM-1275-S	1275 mm (46.3 in)	1386 mm (54.6 in)	1353 mm (53.3 in)	
SSM-1400-S	1400 mm (55.1 in)	1511 mm (59.5 in)	1478 mm (58.2 in)	
SSM-1475-S	1475 mm (58.1 in)	1586 mm (62.5 in)	1553 mm (61.1 in)	
SSM-1550-S	1550 mm (61.0 in)	1661 mm (65.4 in)	1628 mm (64.1 in)	
SSM-1675-S	1675 mm (65.9 in)	1786 mm (70.3 in)	1753 mm (69.0 in)	
SSM-1750-S	1750 mm (68.9 in)	1861 mm (73.3 in)	1828 mm (72.0 in)	
SSM-1900-S	1900 mm (74.8 in)	2011 mm (79.2 in)	1978 mm (77.9 in)	

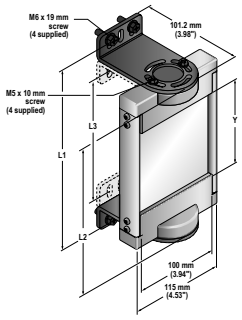

SSM Models	Light Curtain Series					
	SLS	S4B	LP	LS	Type 2	SGS
SSM-100						
SSM-200	150				150	
SSM-375	300	300	270	280	300	
SSM-475			410	350/420		
SSM-550	450	450		490	450	2–500
SSM-675	600	600	550	560/630	600	
SSM-825	750	750	690	700/770	750	
SSM-875			830	840		3–400
SSM-975	900	900		910	900	4–300
SSM-1100	1050	1050	970	980/1050	1050	
SSM-1175			1110	1120		
SSM-1275	1200	1200		1190	1200	4–400
SSM-1400	1350	1350	1250	1260/1330	1350	
SSM-1475			1390	1400		
SSM-1550	1500	1500		1470	1500	
SSM-1675			1530	1540/1610		
SSM-1750	1650	1650	1670	1680		
SSM-1900	1800	1800	1810	1750/1820		

10.12 Mounting Brackets

See "Replacement Parts" on page 94 for standard brackets. Contact Banner Engineering for more information. **Order one EZA-MBK-.. bracket per sensor, two per pair.**

[25] The mounting brackets may be inverted from the positions shown at left (flanges pointing “inward” instead of “outward,” as shown). When this is done, dimension L1 decreases by 58 mm (2.3 in).

© Banner Engineering Corp. All rights reserved.
www.bannerengineering.com

EZA-MBK-2

- Adapter bracket for mounting SSM series mirror to MSA series stands

Hole center spacing: A = 63.9, B = 19.9, A to B = 22.0
Hole size: A = ø 8.3, B = ø 4.8

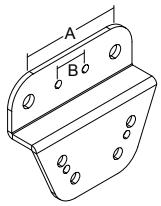

EZA-MBK-13

- Retrofit for Sick C4000, AB SafeShield/GuardShield, Omron FS3N, STI MC42/47



EZA-MBK-14

- Retrofit for STI MS4300



EZA-MBK-15

- Retrofit for STI MS46/47, Keyence PJ-V, SUNX SF4-AH



EZA-MBK-18

- Retrofit for Dolan-Jenner SS7



EZA-MBK-20

- Adapter brackets for mounting to engineered/slotted aluminum framing such as 80/20™ and Unistrut™. Angled slots allow mounting to 20 mm to 40 mm dual channel and center slot. allows mounting to single-channel framing
- Retrofit for Banner MINI-SCREEN
- Order **EZA-MBK-20U** for bracket with M5 and M6 mounting hardware

Hole size: A = ø7 × 25 (2); B = ø7 × 18; C = ø21.5; D = ø4.8 × 10.2;

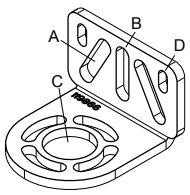

© Banner Engineering Corp. All rights reserved.
www.bannerengineering.com

EZA-MBK-21 • Mounting bracket system for L configuration of two cascaded EZ-SCREEN light screens • M5 and M6 mounting hardware	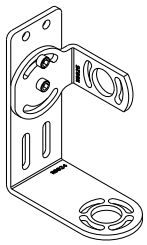

10.13 Alignment Aids

Model	Description	
LAT-1-SS	Self-contained visible-beam laser tool for aligning any EZ-SCREEN 14 mm and 30 mm emitter/receiver pair. Includes retroreflective target material and mounting clip.	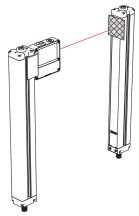
EZA-LAT-SS	Replacement adaptor (clip) hardware for SLS.. models	
EZA-LAT-2	Clip-on retroreflective LAT target	
BRT-THG-2-100	2-inch retroreflective tape, 2.5 m (100 in)	
BT-1	Beam Tracker	

10.14 EZ-LIGHT for EZ-SCREEN

Provides clear, 360° indication of the of the EZ-SCREEN receiver's output status. Use with a CSB splitter cable and optional DEE2R double-ended cables. See datasheet p/n 121901 for more information.

Models		Construction	Connector/LED Function/Inputs
	**K30LRGX8PQ8**	Polycarbonate housing, 30 mm thermoplastic dome, 22 mm base mount Fully encapsulated, IP67	8-pin M12 Integral QD Red/Green indication follows OSSD output of the EZ-SCREEN receiver **ON Red:**—Power ON Beam Blocked or Lockout **ON Green:**—Power ON Beam Clear PNP (Sourcing)
	**K50LRGX8PQ8**	Polycarbonate housing, 50 mm thermoplastic dome, 30 mm base mount Fully encapsulated, IP67	

© Banner Engineering Corp. All rights reserved.
www.bannerengineering.com

Chapter Contents

11.1 Replacement Parts 94
11.2 Clean Components with Mild Detergent 94
11.3 Warranty Service 94
11.4 Manufacturing Date 95
11.5 Disposal 95
11.6 Contact Us 95
11.7 Banner Engineering Corp Limited Warranty 95

Chapter 11 Product Support and Maintenance

11.1 Replacement Parts

Model	Description	
MGA-KSO-1	Panel-mount keyed reset switch	
MGA-K-1	Replacement key for switch MGA-KSO-1	
EZA-ADE-1	Access cover with label – emitter	
EZA-ADR-1	Access cover with label – receiver	
EZA-ADE-2	Access cover with inverted label – emitter	
EZA-ADR-2	Access cover with inverted label – receiver	
EZA-TP-1	Access cover security plate (includes 2 screws, wrench)	
EZA-HK-1	Wrench, security	
STP-13	14 mm test piece (for 14 mm resolution systems)	
STP-14	30 mm test piece (for 30 mm resolution systems)	
STP-15	60 mm test piece (for 30 mm resolution systems with 2-beam Reduced Resolution)	
EZA-RTP-1	Terminator plug for cascaded receiver	
EZA-ECC-10	Dust cap for cascaded emitter	
EZA-MBK-11	Black	Standard bracket kit with hardware. Includes 2 end brackets and hardware to mount to MSA Series stands.
EZA-MBK-11N	Stainless Steel	
EZA-MBK-12	Black	Center bracket kit. Includes 1 bracket and hardware to mount to MSA Series stands), and retrofit for SICK and Leuze Swivel.
EZA-MBK-12N	Stainless Steel	
SMA-MBK-1	SSM Mirror bracket kit. Includes 2 replacement brackets for one mirror.	

11.2 Clean Components with Mild Detergent

Components are best cleaned using mild detergent or window cleaner and a soft cloth. Avoid cleaners containing alcohol, as they may damage the acrylic lens covers.

11.3 Warranty Service

Contact Banner Engineering for troubleshooting of this device. **Do not attempt any repairs to this Banner device; it contains no field-replaceable parts or components.** If the device, device part, or device component is determined to be defective by a Banner Applications Engineer, they will advise you of Banner's RMA (Return Merchandise Authorization) procedure.

> **IMPORTANT:** If instructed to return the device, pack it with care. Damage that occurs in return shipping is not covered by warranty.

© Banner Engineering Corp. All rights reserved.
www.bannerengineering.com

11.4 Manufacturing Date

Every EZ-SCREEN SLS produced is marked with a code that defines the week and year of manufacture and manufacturing location. The code format (U.S. Standard format) is: **YYWWL**

- YY = Year of manufacture, 2 digits
- WW = Week of manufacture, 2 digits
- L = Banner-specific code, 1 digit

Example: 2309H = 2023, Week 9.

11.5 Disposal

Devices that are no longer in use should be disposed of according to the applicable national and local regulations.

11.6 Contact Us

Banner Engineering Corp. headquarters is located at: 9714 Tenth Avenue North | Plymouth, MN 55441, USA | Phone: + 1 888 373 6767

For worldwide locations and local representatives, visit www.bannerengineering.com.

11.7 Banner Engineering Corp Limited Warranty

Banner Engineering Corp. warrants its products to be free from defects in material and workmanship for one year following the date of shipment. Banner Engineering Corp. will repair or replace, free of charge, any product of its manufacture which, at the time it is returned to the factory, is found to have been defective during the warranty period. This warranty does not cover damage or liability for misuse, abuse, or the improper application or installation of the Banner product.

THIS LIMITED WARRANTY IS EXCLUSIVE AND IN LIEU OF ALL OTHER WARRANTIES WHETHER EXPRESS OR IMPLIED (INCLUDING, WITHOUT LIMITATION, ANY WARRANTY OF MERCHANTABILITY OR FITNESS FOR A PARTICULAR PURPOSE), AND WHETHER ARISING UNDER COURSE OF PERFORMANCE, COURSE OF DEALING OR TRADE USAGE.

This Warranty is exclusive and limited to repair or, at the discretion of Banner Engineering Corp., replacement. **IN NO EVENT SHALL BANNER ENGINEERING CORP. BE LIABLE TO BUYER OR ANY OTHER PERSON OR ENTITY FOR ANY EXTRA COSTS, EXPENSES, LOSSES, LOSS OF PROFITS, OR ANY INCIDENTAL, CONSEQUENTIAL OR SPECIAL DAMAGES RESULTING FROM ANY PRODUCT DEFECT OR FROM THE USE OR INABILITY TO USE THE PRODUCT, WHETHER ARISING IN CONTRACT OR WARRANTY, STATUTE, TORT, STRICT LIABILITY, NEGLIGENCE, OR OTHERWISE.**

Banner Engineering Corp. reserves the right to change, modify or improve the design of the product without assuming any obligations or liabilities relating to any product previously manufactured by Banner Engineering Corp. Any misuse, abuse, or improper application or installation of this product or use of the product for personal protection applications when the product is identified as not intended for such purposes will void the product warranty. Any modifications to this product without prior express approval by Banner Engineering Corp will void the product warranties. All specifications published in this document are subject to change; Banner reserves the right to modify product specifications or update documentation at any time. Specifications and product information in English supersede that which is provided in any other language. For the most recent version of any documentation, refer to: www.bannerengineering.com.

For patent information, see www.bannerengineering.com/patents.

© Banner Engineering Corp. All rights reserved.
www.bannerengineering.com

Index

A

apply power
  system power-up 58
  trip 58
  latch 58
applications
  inappropriate 11
alignment, mechanical 30
applications and limitation 11
accessories
  safety controller 88

C

checkout
  initial 33
  periodic 59
  schedule of 60
  daily 62
  semi-annual 62
  commissioning 60
control reliability 12
calculating safety (minimum) distance 20
corner mirrors 27
crosstalk
  scan code 28

D

dual-channel control 40

E

emitter
  power/fault indicator 53
  orientation 24
electrical connections 39
external device monitoring (EDM) 41
external device monitoring (EDM) input 41

F

FSD 40
final switching devices 40

H

hazards
  reducing 22

I

initial power-up 33
indicator
  emitter power/fault 53

L

latch output 58

M

mechanical alignment 30
mirrors
  optical alignment 35
minimum distance 20
machine primary control elements (MPCE) 41
multiple systems 28

N

noise 83

O

optical alignment with mirrors 35
OSSD 39
output signal switching device 39
orientation 24

P

power
  system 58
protective stop circuit 40

R

reset procedure 51
reset switch location 51, 23
receiver
  orientation 24
recovery procedures 79

S

safety stop circuit 40
single-channel control 41
safety distance 20
supplemental safeguarding 23
safety controller 88

T

trip output 58
trip/latch output 51

© Banner Engineering Corp. All rights reserved.
www.bannerengineering.com

Glossary

ANSI

The American National Standards Institute (ANSI) is an association of industry representatives that develops technical standards (including safety standards). These standards comprise a consensus from a variety of industries on good practice and design. ANSI standards relevant to the application of safety products include the ANSI B11 Series, and ANSI/RIA R15.06.

auto start/restart (trip) condition

An auto start/restart condition is when the safety outputs of a safety light curtain system turn off after an object completely blocks a beam and re-energize when the object is removed from the defined area.

cascade

A cascade is a series connection (or daisy-chain) of multiple emitters and receivers.

control reliability

Control reliability is a method of ensuring the performance integrity of a control system or device. Control circuits are designed and constructed so that a single failure or fault within the system does not prevent the normal stopping action from being applied to the machine when required, or does not create unintended machine action, but does prevent initiation of successive machine action until the failure is corrected.

defined area

The defined area is the "screen of light" generated by a safety light curtain system that is defined by the height and the safety distance (minimum distance) of the system.

Designated Person

A Designated Person is a person or persons identified and designated in writing, by the employer, as being appropriately trained and qualified to perform a specified checkout procedure.

dual-channel

A dual-channel device or configuration has redundant signal lines for each safety input or safety output.

emitter (light curtain)

The light curtain's emitter is the light-emitting component of a safety light curtain system, consisting of a row of synchronized modulated LEDs. The emitter, together with the receiver (placed opposite), creates a "screen of light" called the defined area.

external device monitoring

External device monitoring (EDM) is a means by which a safety device (such as a safety light curtain) actively monitors the state (or status) of external devices that may be controlled by the safety device. A lockout of the safety device will result if an unsafe state is detected in the external device. External device(s) may include, but are not limited to: MPCEs, captive contact relays/contactors, and safety modules.

final switching device

A final switching device (FSD) is the component of the machine’s safety-related control system that interrupts the circuit to the machine primary control element (MPCE) when the output signal switching device (OSSD) goes to the OFF-state.

fixed blanking

Fixed blanking is a programming feature that allows a safety light curtain system to ignore objects (such as brackets or fixtures) that will always be present at a specific location within the defined area. The presence of these objects will not cause the system’s safety outputs (for example, final switching devices) to trip or latch. If any fixed objects are moved within or removed from the defined area, a lockout condition results.

© Banner Engineering Corp. All rights reserved.
www.bannerengineering.com

floating blanking

Floating blanking is a feature that allows a safety light curtain system to be configured to produce an intentionally disabled light beam(s) within the light curtain, which increases the minimum object sensitivity. The disabled beam(s) appears to move up and down (float) to allow the feeding of an object through the defined area at any point without tripping the safety outputs (for example, OSSDs) and causing an auto start/restart (trip) or manual start/restart (latch) condition. Sometimes also called reduced resolution.

guarded machine

A guarded machine is the machine whose point of operation is guarded by the safety system.

hard (fixed) guard

Hard (fixed) guards are screens, bars, or other mechanical barriers affixed to the frame of the machine intended to prevent entry by personnel into the hazardous area(s) of a machine, while allowing the point of operation to be viewed. The maximum size of the openings is determined by the applicable standard, such as Table O-10 of OSHA 29CFR1910.217, also called a "fixed barrier guard."

hazard point

A hazard point is the closest reachable point of the hazardous area.

hazardous area

The hazardous area is an area that poses an immediate or impending physical hazard.

IEC

International Electrotechnical Commission

key reset (manual reset)

A key reset is a key-operated switch used to reset a safety light curtain system to Run mode following a lockout condition, or to enable machine operation following a manual start/restart (latch) condition. Key reset also refers to the act of using the key-operated switch.

lockout condition

A lockout condition is a safety light curtain condition that is automatically attained in response to certain failure signals. When a lockout condition occurs, the safety light curtain’s safety outputs turn off; the failure must be corrected and a manual reset is required to return the system to run mode.

machine primary control element

A machine primary control element (MPCE) is an electrically powered element, external to the safety system, that directly controls the machine’s normal operating motion in such a way that the element is last (in time) to operate when the machine motion is either initiated or arrested.

manual reset

A manual reset is the safety input device control operation setting where the assigned safety output turns on only after a manual reset is performed and if the other associated input devices are in their run state. When manual reset is selected, the input device may be said to be configured to run in manual start/restart (latch) mode; meaning that the controlled output has latched to the off state and requires a manual reset to turn back on. This reset is sometimes called a manual latch reset.

manual start/restart (latch)

Manual start/restart (latch) is when the safety outputs of a safety light curtain system turn off when an object completely blocks a beam. In a manual start/restart condition, the safety outputs stay off when the object is removed from the defined area. To re-energize the outputs, perform a proper manual reset.

OSHA

The Occupational Safety and Health Administration (OSHA) is a U.S. Federal agency and division of the U.S. Department of Labor responsible for the regulation of workplace safety.

© Banner Engineering Corp. All rights reserved.

output signal switching device

The output signal switching devices (OSSD) are the safety outputs that are used to initiate a stop signal.

part-revolution clutch

A part-revolution clutch is a type of clutch that may be engaged or disengaged during the machine cycle. Part-revolution clutched machines use a clutch/brake mechanism, which can arrest machine motion at any point in the stroke or cycle.

pass-through hazard

A pass-through hazard is associated with applications where personnel may pass through a safeguard (which issues a stop command to remove the hazard), and then continues into the guarded area, such as in perimeter guarding. Subsequently, their presence is no longer detected, and the related danger becomes the unexpected start or restart of the machine while personnel are within the guarded area.

point-of-operation guarding

Point-of-operation guarding are safeguards, such as hard guards or safety light curtains, that are designed to protect personnel from hazardous machine motion when close to the machine’s point of operation.

Qualified Person

A Qualified Person is a person who, by possession of a recognized degree or certificate of professional training, or who, by extensive knowledge, training and experience, has successfully demonstrated the ability to solve problems relating to the subject matter and work.

receiver (light curtains)

The receiver is the light-receiving component of a safety light curtain system and consists of a row of synchronized phototransistors. The receiver, together with the emitter (placed opposite), creates a "screen of light" called the defined area.

reduced resolution

Reduced resolution is a feature that allows a safety light curtain system to be configured to produce an intentionally disabled light beam(s) within the light curtain, which increases the minimum object sensitivity. The disabled beam(s) appears to move up and down (float) to allow the feeding of an object through the defined area at any point without tripping the safety outputs (for example, OSSDs) and causing an auto start/restart (trip) or manual start/restart (latch) condition. Sometimes also called floating blanking.

reset

A reset refers to the use of a manually operated switch to restore the safety outputs to the ON state from a lockout or a manual start/restart (latch) condition.

resolution

A safety light curtain's resolution is the minimum-diameter object that the safety light curtain system can reliably detect. Objects of this diameter or greater are detected anywhere in the defined area. A smaller object can pass undetected through the light if it passes exactly midway between two adjacent light beams.

safety distance

The safety distance is the minimum distance required to allow the machine’s hazardous motion to stop completely before a hand (or other object) can reach the nearest hazard point. The safety distance is measured from the midpoint of the defined area to the nearest hazard point. Factors that influence minimum separation distance include the machine stop time, the light curtain system response time, and the light curtain minimum object detection size.

single-channel

Single-channel refers to having only one signal line for a safety input or safety output.

supplemental guarding

Supplemental guarding is additional safeguarding device(s) or hard guarding, used to prevent a person from reaching over, under, through or around the primary safeguard or otherwise accessing the guarded hazard.

© Banner Engineering Corp. All rights reserved.

test piece

A test piece is an opaque object of sufficient size used to block a light beam to test the operation of a safety light curtain system. When inserted into the defined area and placed in front of a beam, the test piece causes the outputs to de-energize.

© Banner Engineering Corp. All rights reserved.

LinkedIn

X (formerly Twitter)

Facebook



© 2025. All rights reserved.
www.bannerengineering.com