DF-G2 High-Speed Expert Dual Display Small Object Counter Quick Start Guide

Quick Start Guide

Advanced sensor with dual digital displays for small object counting applications

For complete technical information about this product, including installation instructions, application requirements and guidelines, technical specifications, and accessories, go to www.bannerengineering.com and search for your model number or for product manual p/n 178236.

WARNING:

- **Do not use this device for personnel protection**
- Using this device for personnel protection could result in serious injury or death.
- This device does not include the self-checking redundant circuitry necessary to allow its use in personnel safety applications. A device failure or malfunction can cause either an energized (on) or de-energized (off) output condition.

Overview

DF-G2 Model Features

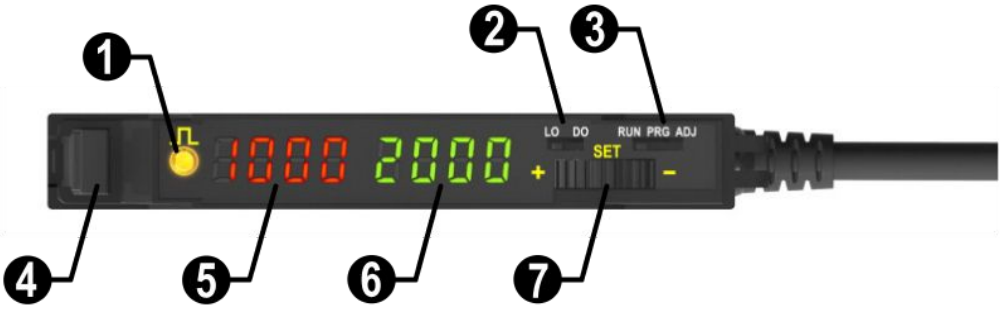

1. Output LED
2. LO/DO Switch
3. RUN/PRG/ADJ Mode Switch
4. Lever Action Fiber Clamp
5. Red Signal Level
6. Green Threshold
7. +/SET/- Rocker Button

Models

Model	Outputs	Connector
DF-G2-NC-2M	Single NPN, plus Health Mode output	2 m (6.5 ft) cable, 5-wire
DF-G2-PC-2M	Single PNP, plus Health Mode output	
DF-G2-NC-Q5	Single NPN, plus Health Mode output	150 mm (6 in) PVC cable with a 5-pin M12 quick disconnect
DF-G2-PC-Q5	Single PNP, plus Health Mode output	
DF-G2-NC-Q7	Single NPN, plus Health Mode output	Integral 5-pin M8 quick disconnect
DF-G2-PC-Q7	Single PNP, plus Health Mode output	

Fiber Optic Arrays			
Models [1]	**Detection Window Dimensions**	**Fiber Exit**	**Minimum Object Size** [2]
PFCVA-10X25-S	10 mm x 25 mm	Side exit	1.5 mm
PFCVA-10X25-E		End exit	

Continued on page 2

[1] Custom fiber arrays and mounting configurations are possible. Consult factory for assistance with your small object counting application.
[2] With 2% threshold offset percentage

Original Instructions
31-Mar-26

© Banner Engineering Corp. All rights reserved.
www.bannerengineering.com

178061
p/n: 178061 Rev G

ПРОМЭЛЕКТРОНИКА/ sales@prom-elec.com

Continued from page 1

Fiber Optic Arrays			
Models	**Detection Window Dimensions**	**Fiber Exit**	**Minimum Object Size**
PFCVA-25X25-S	25 mm x 25 mm	Side exit	3 mm
PFCVA-25X25-E		End exit	
PFCVA-34X25-S	34 mm x 25 mm	Side exit	4 mm
PFCVA-34X25-E		End exit	

- A model with a QD connector requires a mating cordset
- To order the 150 mm (6 in) PVC cable with a 5-pin M8 QD model, change the suffix 2M to **Q3** in the 2 m model number (example, DF-G2-NC-**Q3**)
- For Q3 and Q7 models, use a 5-pin M8 or a 6-pin M8 mating cordset

The following models are no longer available for order but are still covered by the information in this document.

- DF-G2-PC-9M
- DF-G2-NC-9M
- DF-G2-NC-Q3

Installation Instructions

Mounting Instructions

Mount on a DIN Rail

1. Hook the DIN rail clip on the bottom of the DF-G2 over the edge of the DIN rail (1).
2. Push the DF-G2 up on the DIN rail (1).
3. Pivot the DF-G2 onto the DIN rail, pressing until it snaps into place (2).

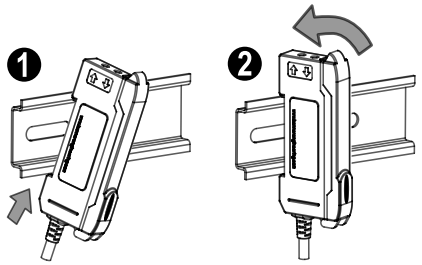

Mount to the Accessory Bracket (SA-DIN-BRACKET)

1. Position the DF-G2 in the SA-DIN-BRACKET.
2. Insert the supplied M3 screws.
3. Tighten the screws.

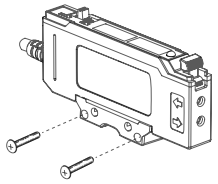

Remove from a DIN rail

1. Push the DF-G2 up on the DIN rail (1).
2. Pivot the DF-G2 away from the DIN rail and remove it (2).

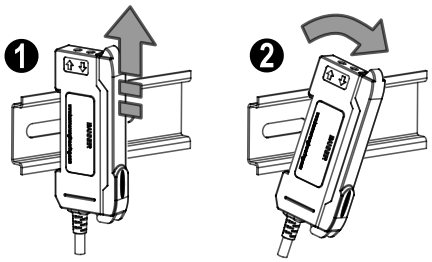

© Banner Engineering Corp. All rights reserved.
www.bannerengineering.com

Installing the Fibers in a DF-Gx Sensor

Follow these steps to install glass or plastic fibers.

1. Open the dust cover.
2. Move the fiber clamp forward to unlock it.
3. Insert the fiber(s) into the fiber port(s) until they stop.
4. Move the fiber clamp backward to lock the fiber(s).
5. Close the dust cover.

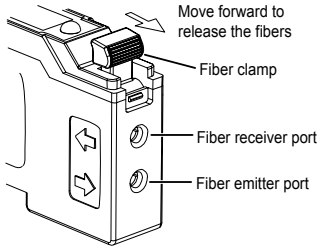

For optimum performance of IR models, if applicable, glass fibers must be used.

Fiber Adapters

If a thin fiber with less than 2.2 mm outer diameter is used, install the fiber adapter provided with the fiber assembly to ensure a reliable fit in the fiber holder. Align the fibers to the end of the adaptors. Banner includes the adapters with all fiber assemblies.

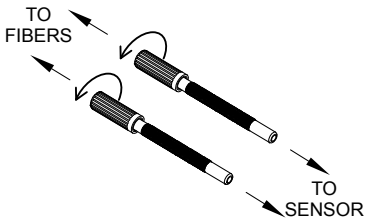

Fiber Outer Diameter (mm)	Adapter Color
Ø 1.0	Black
Ø 1.3	Red
Ø 2.2	No adapter needed

When connecting coaxial-type fiber assemblies to the amplifier, install the single-core (center) fiber to the Transmitter port, and the multi-core (outer) fiber to the Receiver port. This will result in the most reliable detection.

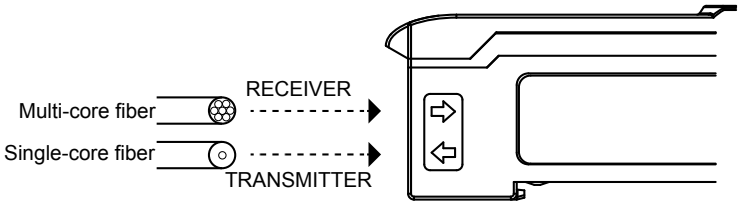

Wiring Diagrams

NOTE: Open lead wires must be connected to a terminal block.

© Banner Engineering Corp. All rights reserved.
www.bannerengineering.com

PNP models

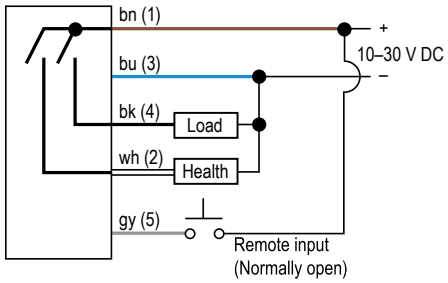

NPN models

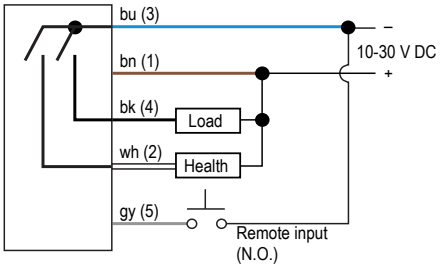

Key

1 = Brown
2 = White
3 = Blue
4 = Black
5 = Gray
(6 = no connection)

5-pin M12 male pinout

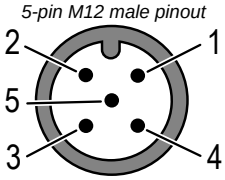

Top Panel Interface

Opening the dust cover provides access to the top panel interface. The top panel interface consists of the RUN/PRG/ADJ mode switch, LO/DO switch, +/SET/- rocker button, dual red/green digital displays, and output LED.

RUN/PRG/ADJ Mode Switch



The RUN/PRG/ADJ mode switch puts the sensor in RUN, PRG (Program), or ADJ (Adjust) mode. RUN mode allows the sensor to operate normally and prevents unintentional programming changes via the +/SET/- button. PRG mode allows the sensor to be programmed through the display-driven programming menu (see "Program Mode" on page 5). ADJ mode allows the user to perform Expert TEACH/SET methods and Manual Adjust (see "Adjust Mode" on page 5).

LO/DO Switch



The LO/DO switch is used to select Light Operate or Dark Operate mode. In Light Operate mode, the output is ON when the sensing condition is above the threshold (for Window SET, the output is ON when the sensing condition is inside the window). In Dark Operate mode, the output is ON when the sensing condition is below the threshold (for Window SET, the output is ON when the sensing condition is outside the window).

+/SET/- Rocker Button

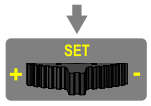

The +/SET/- rocker button is a 3-way button. The +/- positions are engaged by rocking the button left/right. The SET position is engaged by clicking down the button while the rocker is in the middle position. All three button positions are used during PRG mode to navigate the display-driven programming menu. During ADJ mode, SET is used to perform TEACH/SET methods. The rocker button is disabled during RUN mode, except when using Window SET, see "Window SET" on page 6.

Red/Green Digital Displays



Output LED

The output LED provides a visible indication when the output is activated.

© Banner Engineering Corp. All rights reserved.
www.bannerengineering.com

Operating Instructions

Remote Input

For more information about how to perform TEACH/SET methods and to program the sensor remotely, see www.bannerengineering.com and search for 178236.

Run Mode

Run mode allows the sensor to operate normally and prevents unintentional programming changes. The +/SET/- rocker button is disabled during RUN mode, except when using Window SET.

In RUN Mode, the SET function of the +/SET/- rocker button allows the user to toggle between the threshold center value and the total number of counts on the Green display. If the Totalizer function is enabled, the total counts value increments to the programmed value and then starts over at 0. If the Totalizer function is disabled, the total counts value increments to 9999 and then starts over at 0. Changing any operational setting causes the total counts value to reset to 0.

Program Mode



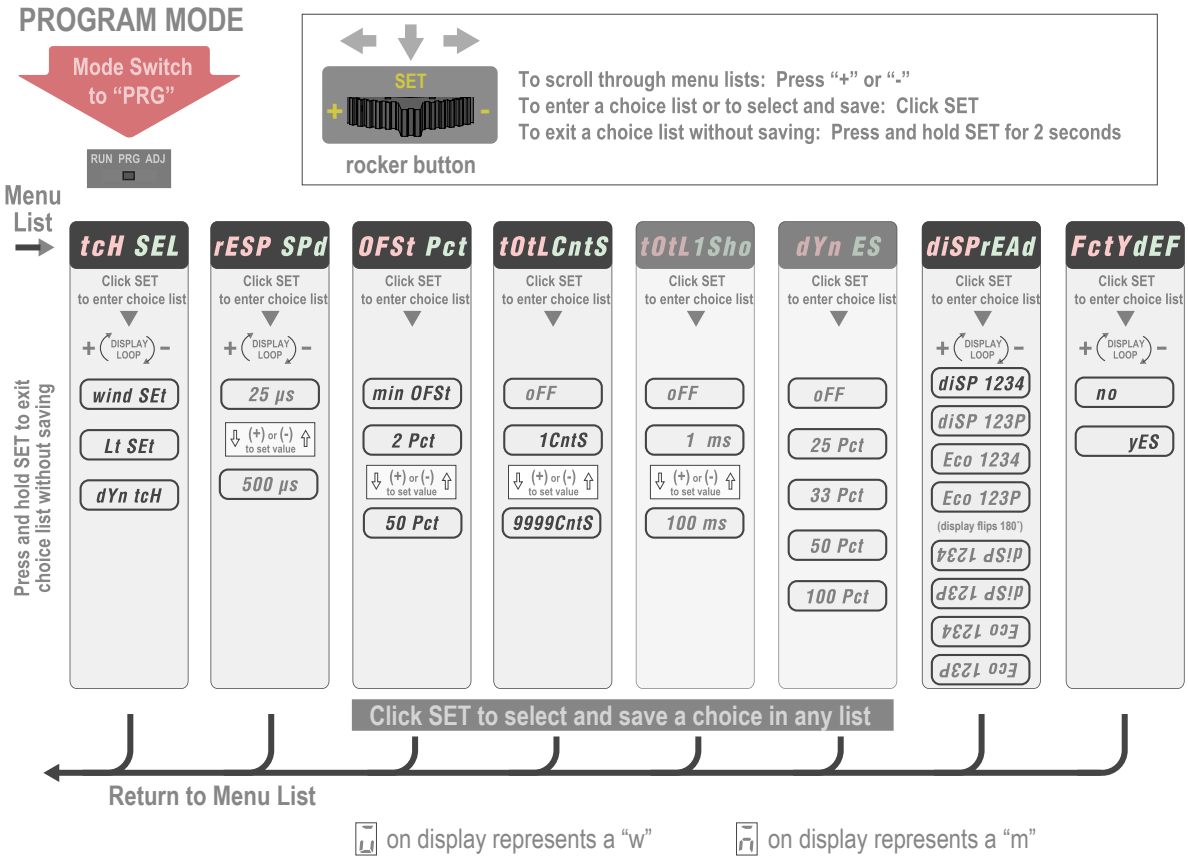

Program (PRG) mode allows the following settings to be programmed in the DF-G2:

Factory Default Settings:

Adjust Mode

Sliding the RUN/PRG/ADJ mode switch to the ADJ position allows the user to perform Expert TEACH/SET methods.

TEACH Procedures

The instruction manual has detailed instructions for these TEACH modes:

© Banner Engineering Corp. All rights reserved.
www.bannerengineering.com

- Window SET
- Light SET
- Dynamic TEACH

Window SET

- Sets window thresholds that extend a programmable % offset above and below the presented condition
- All other conditions (lighter or darker) cause the output to change state
- Recommended for applications where a product may not always appear in the same place, or when other signals may appear
- See Program Mode for programming the Offset Percent Setting (to increase/decrease the window size)

A single sensing condition is presented, and the sensor positions window thresholds a programmable % offset above and below the presented condition. In LO mode, Window SET designates a sensing window with the Output ON condition inside the window, and the Output OFF conditions outside the window.

Window SET (Light Operate shown)

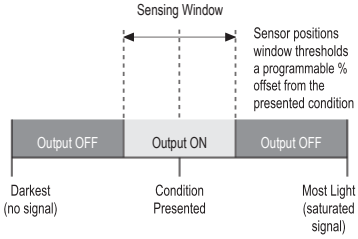

Output ON and OFF conditions can be reversed using the LO/DO switch.

Light SET

- Sets a threshold a programmable % offset below the presented condition
- Changes output state on any condition darker than the threshold condition
- Recommended for applications where only one condition is known, for example a stable light background with varying darker targets
- See Program Mode for programming the Offset Percent Setting (to increase/decrease the window size)

A single sensing condition is presented, and the sensor positions a threshold a programmable % offset below the presented condition. When a condition darker than the threshold is sensed, the output either turns ON or OFF, depending on the LO/DO setting.

Light SET (Light Operate shown)

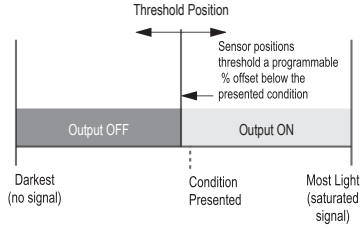

Dynamic TEACH

- Teaches on-the-fly
- Establishes a single switching threshold

Dynamic TEACH is best used when a machine or process may not be stopped for teaching. The sensor learns during actual sensing conditions, taking multiple samples of the light and dark conditions and automatically setting the threshold at the optimum level.

The output ON and OFF conditions can be reversed using the LO/DO switch.

Dynamic TEACH (Light Operate shown)

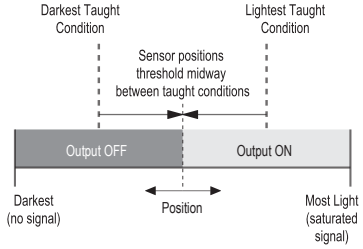

Troubleshooting

Percent Minimum Difference after TEACH

The Dynamic TEACH method flashes a % minimum difference on the displays after a PASS or FAIL.

Value	PASS/FAIL	Description
0 to 99%	FAIL	The difference between the taught conditions does not meet the required minimum

Continued on page 7

© Banner Engineering Corp. All rights reserved.
www.bannerengineering.com

Continued from page 6

Value	PASS/FAIL	Description
100 to 300%	PASS	The difference between the taught conditions just meets/exceeds the required minimum; minor sensing variables may affect sensing reliability
300 to 600%	PASS	The difference between the taught conditions sufficiently exceeds the required minimum; minor sensing variables will not affect sensing reliability
600% +	PASS	The difference between the taught conditions greatly exceeds the required minimum, and the operation is very stable operation

Percent Offset after SET

The Window and Light SET methods flash a % offset on the displays after a PASS or FAIL.

SET Result	% Offset Meaning
PASS (with % Offset)	Displays the % offset used for the SET method
FAIL (with % Offset)	Displays the minimum required % offset necessary to PASS the SET method
FAIL (without % Offset)	The presented condition cannot be used for the SET method

Health Mode Alarm

The Health Mode Alarm alerts you when preventative maintenance becomes necessary to ensure reliable sensing. The Health Mode output 2 is Active when the system is OK and operating normally. Health Mode output 2 becomes Inactive when the system is in a marginal state because of contamination. The system still operates normally and can detect small objects, but is nearing the alarm state. When the system is completely contaminated and unable to ensure reliable sensing, the system goes into the alarm state. In the alarm state, the discrete output 1 is forced to the blocked state and can no longer be used to detect small objects.

- Threshold Alert  displays when Health Mode output 2 is inactive because of contamination. The system operates normally but is nearing the alarm state.
- Threshold Error  displays when discrete output 1 is forced to the blocked state and can no longer be used to detect small objects.

The sensor may enter Health Mode Alarm for any of these reasons:

1. When first powered up; the fiber optic array may already be contaminated
2. If the Window SET procedure fails, indicating the fiber optic array is contaminated and the sensor could not set a valid clear-state light level for reliable detection
3. If the fiber optic array is contaminated enough that the auto compensation tracking algorithm cannot sufficiently adjust the thresholds to ensure reliable detection
4. If the fiber optic array is blocked for more than 2 seconds

Return the system to normal operation by cleaning the fiber optic array and performing a Window SET to reset the clear-state light level (see "Window SET" on page 6).

Specifications

Sensing Beam
Visible red, 635 nm

Supply Voltage
10 V DC to 30 V DC Class 2 (10% maximum ripple)

Power and Current Consumption (exclusive of load)
Standard display mode: 960 mW, Current consumption < 40 mA at 24 V DC
ECO display mode: 720 mW, Current consumption < 30 mA at 24 V DC

Supply Protection Circuitry
Protected against reverse polarity and transient overvoltages

Delay at Power-Up
500 milliseconds maximum; outputs do not conduct during this time

Output Configuration
1 NPN or 1 PNP output, depending on model, plus 1 Health Mode output

Output Rating
100 mA maximum combined load (derate 1 mA per °C above 30 °C)
OFF-state leakage current: < 5 µA at 30 V DC;
ON-state saturation voltage: NPN: < 1.5 V; **PNP :** < 2 V

Output Protection
Protected against output short-circuit, continuous overload, transient overvoltages, and false pulse on power-up

Output Response Time
25 µs
50 µs
150 µs
250 µs
500 µs

© Banner Engineering Corp. All rights reserved.
www.bannerengineering.com

Repeatability

12 µs
12 µs
30 µs
50 µs
80 µs

Connections

PVC-jacketed 2 m or 9 m (6.5 ft or 30 ft) 5-wire integral cable; or integral 5-pin M8 quick disconnect; or 150 mm (6 in) cable with a 5-pin M12 quick disconnect; or 150 mm (6 in) cable with a 5-pin M8 quick disconnect

For Q3 or Q7 5-pin models, either a 5-pin M8 or a 6-pin M8 mating cordset may be used

Certifications

Banner Engineering BV
Park Lane, Culliganlaan 2F bus 3
1831 Diegem, BELGIUM

Turck Banner LTD Blenheim House
Blenheim Court
Wickford, Essex SS11 8YT
GREAT BRITAIN

Industrial Control Equipment
3TJJ

Construction

Black ABS/polycarbonate alloy (UL94 V-0 rated) housing, clear polycarbonate cover

Operating Conditions

Temperature: –10 °C to +55 °C (+14 °F to +131 °F)

Storage Temperature: –20 °C to +85 °C (–4 °F to +185 °F)

Humidity: 90% at +60 °C maximum relative humidity (non-condensing)

Environmental Rating

IP50, NEMA 1

Required Overcurrent Protection

WARNING: Electrical connections must be made by qualified personnel in accordance with local and national electrical codes and regulations.

Overcurrent protection is required to be provided by end product application per the supplied table.

Overcurrent protection may be provided with external fusing or via Current Limiting, Class 2 Power Supply.

Supply wiring leads < 24 AWG shall not be spliced.

For additional product support, go to www.bannerengineering.com.

Supply Wiring (AWG)	Required Overcurrent Protection (A)	Supply Wiring (AWG)	Required Overcurrent Protection (A)
20	5.0	26	1.0
22	3.0	28	0.8
24	2.0	30	0.5

© Banner Engineering Corp. All rights reserved.
www.bannerengineering.com

Dimensions

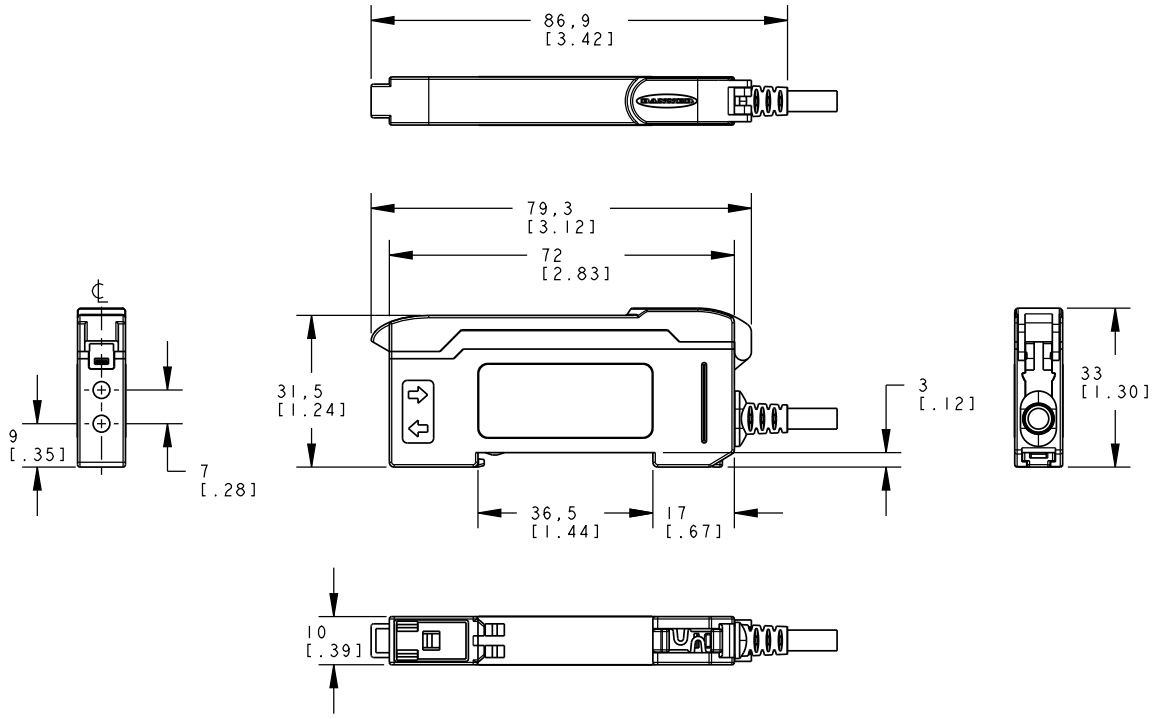

Fiber Optic Array Dimensions

PFCVA-10X25-S and PFCVA-10X25-E

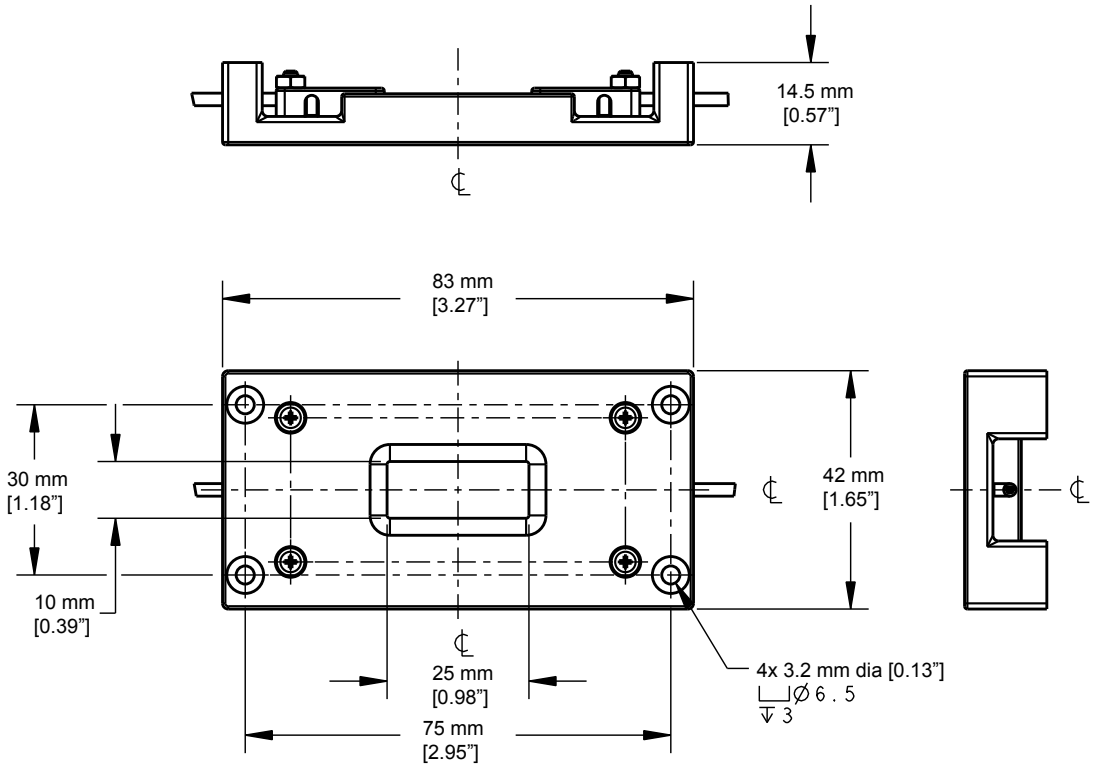

© Banner Engineering Corp. All rights reserved.
www.bannerengineering.com

PFCVA-25X25-S and PFCVA-25X25-E

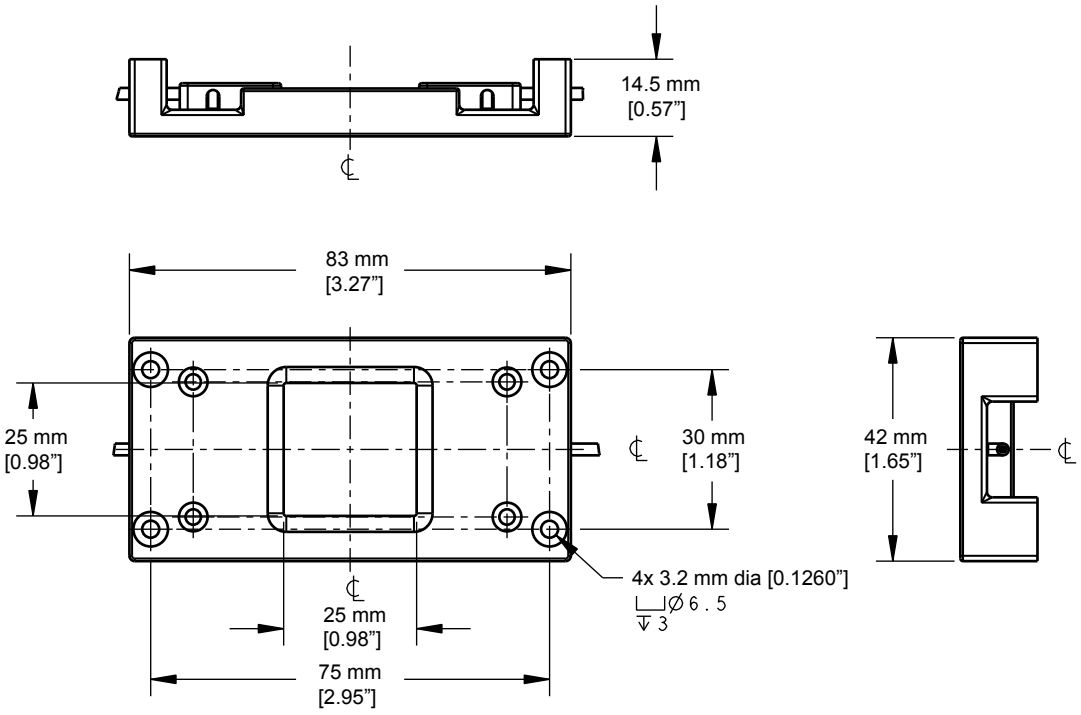

PFCVA-34X25-S and PFCVA-34X25-E

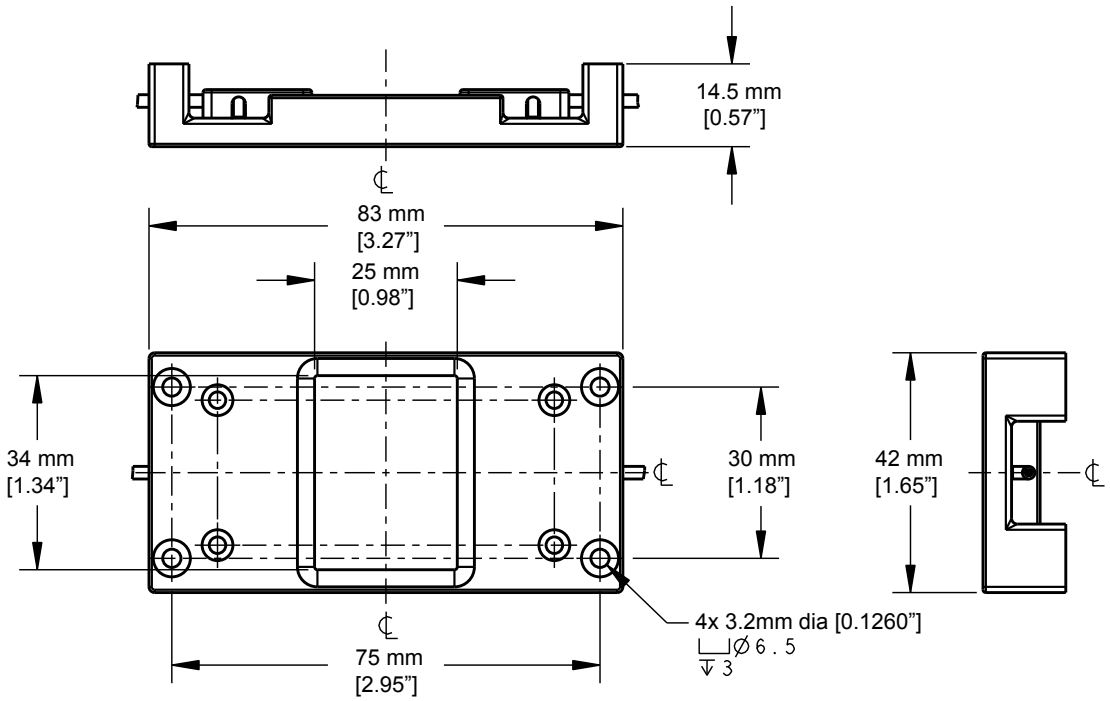

Banner Engineering Corp Limited Warranty

Banner Engineering Corp. warrants its products to be free from defects in material and workmanship for one year following the date of shipment. Banner Engineering Corp. will repair or replace, free of charge, any product of its manufacture which, at the time it is returned to the factory, is found to have been defective during the warranty period. This warranty does not cover damage or liability for misuse, abuse, or the improper application or installation of the Banner product.

THIS LIMITED WARRANTY IS EXCLUSIVE AND IN LIEU OF ALL OTHER WARRANTIES WHETHER EXPRESS OR IMPLIED (INCLUDING, WITHOUT LIMITATION, ANY WARRANTY OF MERCHANTABILITY OR FITNESS FOR A PARTICULAR PURPOSE), AND WHETHER ARISING UNDER COURSE OF PERFORMANCE, COURSE OF DEALING OR TRADE USAGE.

© Banner Engineering Corp. All rights reserved.
www.bannerengineering.com

This Warranty is exclusive and limited to repair or, at the discretion of Banner Engineering Corp., replacement. **IN NO EVENT SHALL BANNER ENGINEERING CORP. BE LIABLE TO BUYER OR ANY OTHER PERSON OR ENTITY FOR ANY EXTRA COSTS, EXPENSES, LOSSES, LOSS OF PROFITS, OR ANY INCIDENTAL, CONSEQUENTIAL OR SPECIAL DAMAGES RESULTING FROM ANY PRODUCT DEFECT OR FROM THE USE OR INABILITY TO USE THE PRODUCT, WHETHER ARISING IN CONTRACT OR WARRANTY, STATUTE, TORT, STRICT LIABILITY, NEGLIGENCE, OR OTHERWISE.**

Banner Engineering Corp. reserves the right to change, modify or improve the design of the product without assuming any obligations or liabilities relating to any product previously manufactured by Banner Engineering Corp. Any misuse, abuse, or improper application or installation of this product or use of the product for personal protection applications when the product is identified as not intended for such purposes will void the product warranty. Any modifications to this product without prior express approval by Banner Engineering Corp will void the product warranties. All specifications published in this document are subject to change; Banner reserves the right to modify product specifications or update documentation at any time. Specifications and product information in English supersede that which is provided in any other language. For the most recent version of any documentation, refer to: www.bannerengineering.com.

For patent information, see www.bannerengineering.com/patents.

© Banner Engineering Corp. All rights reserved.