MODEL NO.	"L"	"FL"	P/N
PIF62T	610 [24]	13.2 [.52]	51762
PIF63T	914 [36]	13.2 [.52]	87089
PIF6.8TMFL.75	229 [9]	19.0 [.75]	809624

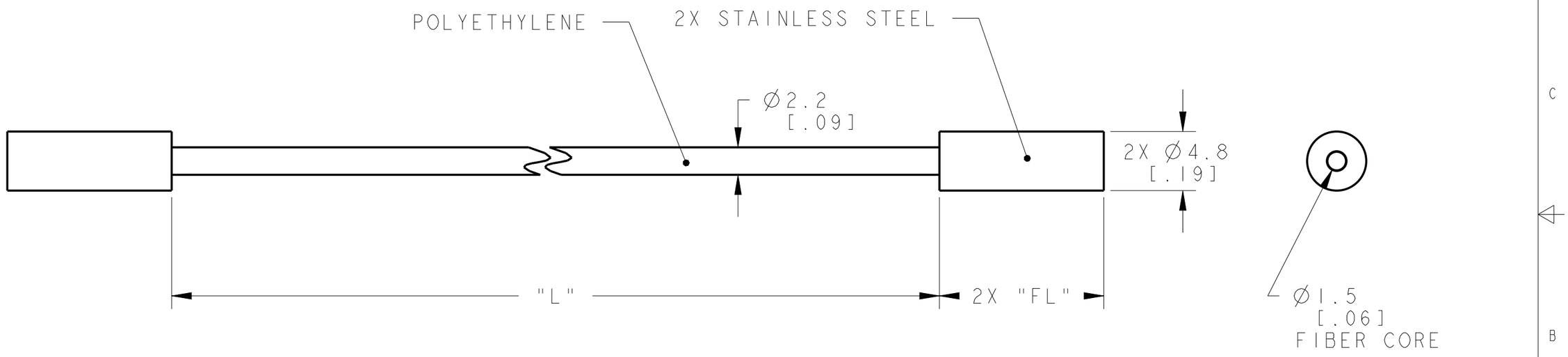

NOTES:
1. ALL DIMENSIONS ARE MILLIMETERS [INCHES] UNLESS OTHERWISE NOTED.
2. REFER TO "www.bannerengineering.com" FOR ADDITIONAL DATA AND SPECIFICATIONS.

This drawing is the property of BANNER ENGINEERING CORP. Any use or reproduction, in any form, without prior written permission of Banner is prohibited.
© 2015 Banner Engineering Corp.

THIRD ANGLE PROJECTION

BANNER ENGINEERING CORP.
www.bannerengineering.com

TITLE

PIF6 SERIES TERMINATED

SIZE	DRAWING NO.	REV.
B	193949	B
SCALE 3:1	SHEET 1 OF 1	

CREO

ПРОМЭЛЕКТРОНИКА/ sales@prom-elec.com