Features

High Daylight Visibility, Single Color Beacon with Optional Audible Alarm for Indoor and Outdoor Use



- Highly visible indicator provides bright, even light in direct sunlight
- Five color choices available
- 36 mm threaded polycarbonate base
- Rugged IP66, UL Type 4X housing
- PNP or NPN operation depending on wiring
- Rugged UV-stabilized polycarbonate base and window
- 12 V DC to 48 V DC operating voltage

Models

Standard models shown. Contact factory for other options.

Family	Style	—	Type	Color	Audible	Connector
K100	**B**	**—**	**BL**	**G**	**A**	**Q**
	B = Basic		BL = Beacon	G = Green Y = Yellow R = Red B = Blue W = White	Blank = None A = Audible	Q = Integral 5-pin M12 male quick-disconnect connector

Wiring Diagrams

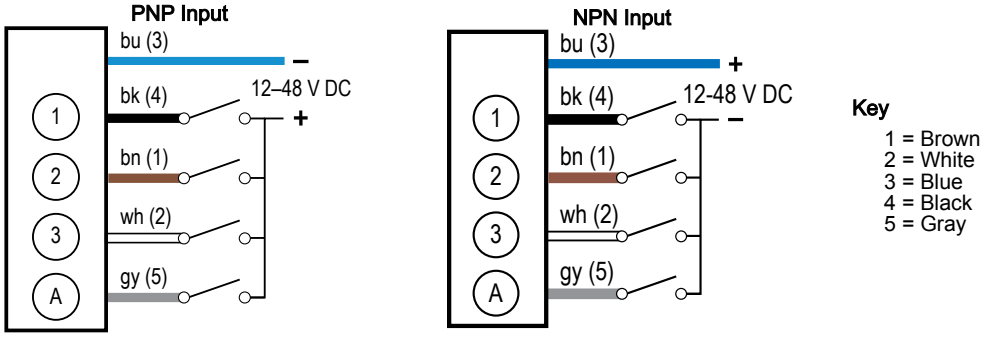

An "X" denotes an active input.

For example: When Input 1 and Input 3 are both active, the indicator will be Flashing at 5 Hz.

Default Configuration

Wiring				Operating Mode/Function	
Black (Input 1)	**Brown (Input 2)**	**White (Input 3)**	**Gray (Input 4)**	**Non-Audible**	**Audible**
X				Flashing at 1 Hz	Flashing at 1 Hz
	X			Steady	Steady
		X		Intensity Sweep	Intensity Sweep
X		X		Flashing at 5 Hz	Flashing at 5 Hz
X	X			Flashing at 0.5 Hz	Flashing at 0.5 Hz
	X	X		Strobe	Strobe

Continued on page 2

Original Instructions
02-Sep-25

© Banner Engineering Corp. All rights reserved.
www.bannerengineering.com

231996
p/n: 231996 Rev. A

ПРОМЭЛЕКТРОНИКА/ sales@prom-elec.com

Continued from page 1

Wiring				Operating Mode/Function	
Black (Input 1)	Brown (Input 2)	White (Input 3)	Gray (Input 4)	Non-Audible	Audible
X	X	X		3-pulse Strobe	3-pulse Strobe
			X	Off	Audible Continuous
X			X	Flashing at 1 Hz	Flashing at 1 Hz, Audible Continuous
	X		X	Steady	Steady, Audible Continuous
		X	X	Intensity Sweep	Intensity Sweep, Audible Continuous
X		X	X	Flashing at 5 Hz	Flashing at 5 Hz, Audible Continuous
X	X		X	Flashing at 0.5 Hz	Flashing at 0.5 Hz, Audible Continuous
	X	X	X	Strobe	Strobe, Audible Continuous
X	X	X	X	3-pulse Strobe	3-pulse Strobe, Audible Continuous

Specifications

Supply Protection Circuitry

Protected against reverse polarity and transient voltages

Leakage Current Immunity

600 µA

Indicator Response Time

On response: 600 ms (max)

Off response: 50 ms (max)

Connections

Integral 5-pin M12 male quick-disconnect connector, 150 mm (6 in) PVC-jacketed cable with an M12 quick disconnect, or 2 m (6.5 ft) integral PVC-jacketed cable, depending on model

Models with a quick disconnect require a mating cordset

Mounting

M36 by 2.0 threaded base, maximum torque 5.0 N·m (44 inch-lbf)

Interior 3/4-14 NPT Thread

Mounting nut included

Adjacent Unit Mounting Separation Distance

Minimum: 0 in (mounted with unit flanges touching)

Audible Characteristics

Sound Intensity: 101 dB, 2.5 KHz, at 1 m (typical)

Construction

Base, Dome, and Nut: Polycarbonate

Operating Conditions

–40 °C to +60 °C (–40 °F to +140 °F)

90% at +60 °C maximum relative humidity (non-condensing)

Storage Temperature: –40 °C to +70 °C (–40 °F to +158 °F)

Vibration and Mechanical Shock

Meets IEC 60068-2-6 requirements (Vibration: 10 Hz to 55 Hz, 1.0 mm amplitude, 5 minutes sweep, 30 minutes dwell)

Meets IEC 60068-2-27 requirements (Shock: 30G 11 ms duration, half sine wave)

Impact: IK10 (60068-2-75)

Environmental Rating

IP66, UL Type 4X

LED Lifetime

Lumen maintenance L_{70}

When operating within specifications, output decreases less than 30% after 42,000 hours

Required Overcurrent Protection

WARNING: Electrical connections must be made by qualified personnel in accordance with local and national electrical codes and regulations.

Overcurrent protection is required to be provided by end product application per the supplied table.

Overcurrent protection may be provided with external fusing or via Current Limiting, Class 2 Power Supply.

Supply wiring leads < 24 AWG shall not be spliced.

For additional product support, go to www.bannerengineering.com.

Supply Wiring (AWG)	Required Overcurrent Protection (A)	Supply Wiring (AWG)	Required Overcurrent Protection (A)
20	5.0	26	1.0
22	3.0	28	0.8
24	2.0	30	0.5

Certifications

Banner Engineering BV
Park Lane, Culliganlaan 2F bus 3
1831 Diegem, BELGIUM

Turck Banner LTD Blenheim House
Blenheim Court
Wickford, Essex SS11 8YT
GREAT BRITAIN

© Banner Engineering Corp. All rights reserved.
www.bannerengineering.com

Supply Voltage and Current

12 V DC to 48 V DC

Product approved with usage of Class 1 or Class 3 Power Supply to achieve Class 2 Power Supply status

Use only with a suitable Class 2 power supply (North America)

Current:

Voltage (V DC)	Steady On, Flash, or Strobe	
	Light Only (mA)	Light & Audible (mA)
12	230	270
18	160	200
24	130	170
30	110	150
36	100	140
42	90	130
48	85	125

Default Indicator Characteristics

At 12 V DC

Color	Dominant Wavelength (nm) or Color Temperature (CCT)	Color Coordinates[1]		Lumen Output (Typical at 25 °C)
		x	y	
Green	528 nm	0.1603	0.6973	200
Yellow	589 nm	0.5557	0.4276	200
Red	625 nm	0.6999	0.2982	93
Blue	475 nm	0.1167	0.1121	60
White	5500K ± 250	0.3320	0.3433	240

Internal temperature compensation circuitry: Reduces the Lumen Output to decrease the unit internal operating temperature. The amount of reduction is dependent on the ambient operating temperature, supply voltage, color, and/or audible functions being utilized.

[1] Refer to CIE 1931 chromaticity diagram or color chart, to show equivalent color with indicated color coordinates.

© Banner Engineering Corp. All rights reserved.
www.bannerengineering.com

Dimensions

All measurements are listed in millimeters [inches], unless noted otherwise. The measurements provided are subject to change.

Standard Models

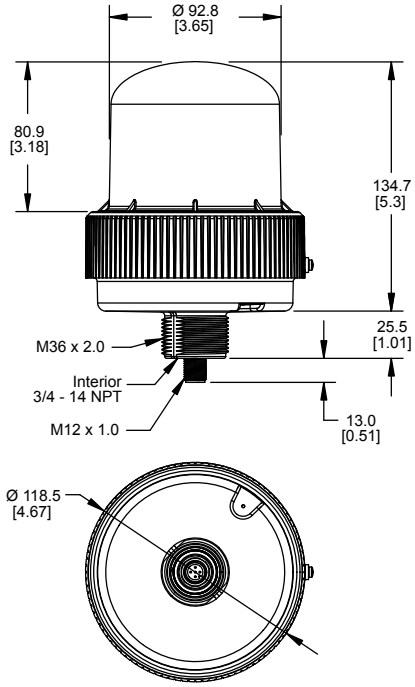

Audible Models

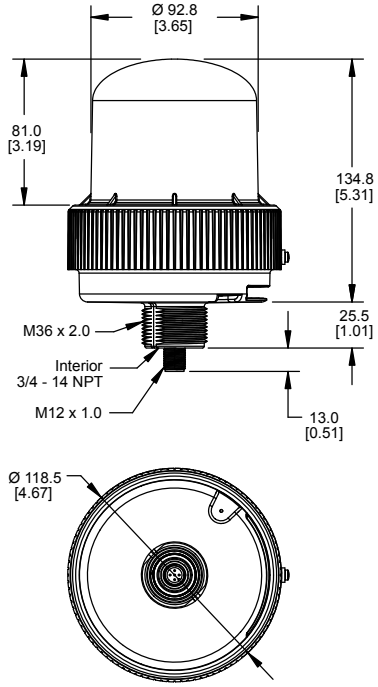

Accessories

Cordsets

5-Pin Single-Ended M12 Female Cordsets				
Model	**Length**	**Style**	**Dimensions**	**Pinout (Female)**
MQDC1-501.5	0.5 m (1.5 ft)	Straight	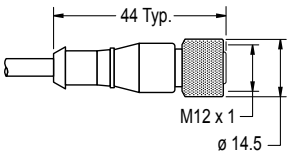	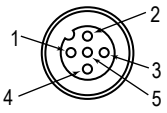 1 = Brown 2 = White 3 = Blue 4 = Black 5 = Gray
MQDC1-503	0.9 m (2.9 ft)			
MQDC1-506	2 m (6.5 ft)			
MQDC1-515	5 m (16.4 ft)			
MQDC1-530	9 m (29.5 ft)			
MQDC1-560	18 m (59 ft)			
MQDC1-5100	31 m (101.7 ft)			
MQDC1-506RA	2 m (6.5 ft)	Right-Angle	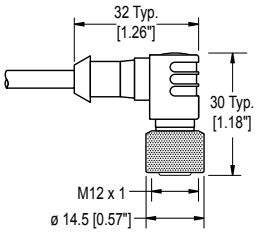	
MQDC1-515RA	5 m (16.4 ft)			
MQDC1-530RA	9 m (29.5 ft)			
MQDC1-560RA	19 m (62.3 ft)			

© Banner Engineering Corp. All rights reserved.
www.bannerengineering.com

Brackets

LMB36RA
- Indicator light right-angle mounting
- 36 mm mounting hole
- Stainless steel

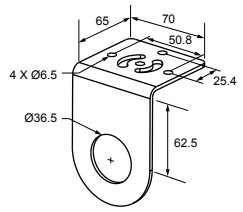

Elevated Mount System

Elevated Mount System (1/2" Pipes)

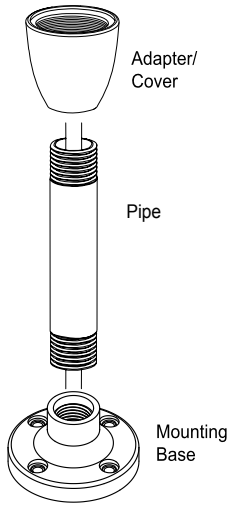

Adapter/Cover Model	Description
SA-M36E12	• Adapter from M36 thread to ½-14 NPSM thread • Streamlined black plastic mounting base adapter/cover • Drilled hole

Black Anodized Aluminum, ½ in. NPT Pipe Models	Clear Anodized Aluminum, ½ in. NPT Pipe Models	Description
SOP-E12-150A, 150 mm (6 in) long	**SOP-E12-150AC**, 150 mm (6 in) long	• Elevated-use stand-off pipe • Threaded at both ends • Compatible with most industrial environments
SOP-E12-300A, 300 mm (12 in) long	**SOP-E12-300AC**, 300 mm (12 in) long	
SOP-E12-600A, 600 mm (24 in) long	-	
SOP-E12-900A, 900 mm (36 in) long	**SOP-E12-900AC**, 900 mm (36 in) long	

Mounting Base Model	Description
SA-F12	• Elevated-use stand-off pipes (½ in, NPSM/DN15) • M5 mounting hardware and nitrile gasket included • Die-cast zinc base with black paint

Elevated Mount System (3/4" Pipes)

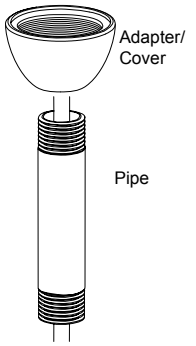

Adapter/Cover Model	Description
SA-M36SOP	• M36 thread adapter with clearance for ¾ pipe mount • Streamlined black plastic mounting base adapter/cover • Drilled hole

Black Anodized Aluminum, ¾ in. NPT Pipe Models	Description
SOP-E34-150A, 150 mm (6 in) long	• Elevated-use stand-off pipe • Threaded at both ends • Compatible with most industrial environments
SOP-E34-300A, 300 mm (12 in) long	
SOP-E34-600A, 600 mm (24 in) long	
SOP-E34-900A, 900 mm (36 in) long	

Banner Engineering Corp Limited Warranty

Banner Engineering Corp. warrants its products to be free from defects in material and workmanship for one year following the date of shipment. Banner Engineering Corp. will repair or replace, free of charge, any product of its manufacture which, at the time it is returned to the factory, is found to have been defective during the warranty period. This warranty does not cover damage or liability for misuse, abuse, or the improper application or installation of the Banner product.

THIS LIMITED WARRANTY IS EXCLUSIVE AND IN LIEU OF ALL OTHER WARRANTIES WHETHER EXPRESS OR IMPLIED (INCLUDING, WITHOUT LIMITATION, ANY WARRANTY OF MERCHANTABILITY OR FITNESS FOR A PARTICULAR PURPOSE), AND WHETHER ARISING UNDER COURSE OF PERFORMANCE, COURSE OF DEALING OR TRADE USAGE.

This Warranty is exclusive and limited to repair or, at the discretion of Banner Engineering Corp., replacement. **IN NO EVENT SHALL BANNER ENGINEERING CORP. BE LIABLE TO BUYER OR ANY OTHER PERSON OR ENTITY FOR ANY EXTRA COSTS, EXPENSES, LOSSES, LOSS OF PROFITS, OR ANY INCIDENTAL, CONSEQUENTIAL OR SPECIAL DAMAGES RESULTING FROM ANY PRODUCT DEFECT OR FROM THE USE OR INABILITY TO USE THE PRODUCT, WHETHER ARISING IN CONTRACT OR WARRANTY, STATUTE, TORT, STRICT LIABILITY, NEGLIGENCE, OR OTHERWISE.**

Banner Engineering Corp. reserves the right to change, modify or improve the design of the product without assuming any obligations or liabilities relating to any product previously manufactured by Banner Engineering Corp. Any misuse, abuse, or improper application or installation of this product or use of the product for personal protection applications when the product is identified as not intended for such purposes will void the product warranty. Any modifications to this product without prior express approval by Banner Engineering Corp will void

© Banner Engineering Corp. All rights reserved.
www.bannerengineering.com

the product warranties. All specifications published in this document are subject to change; Banner reserves the right to modify product specifications or update documentation at any time. Specifications and product information in English supersede that which is provided in any other language. For the most recent version of any documentation, refer to: www.bannerengineering.com.

For patent information, see www.bannerengineering.com/patents.

© Banner Engineering Corp. All rights reserved.